GRABBER®
CONSTRUCTION PRODUCTS

"The Professional's Choice"™

Firestopping Application Guide

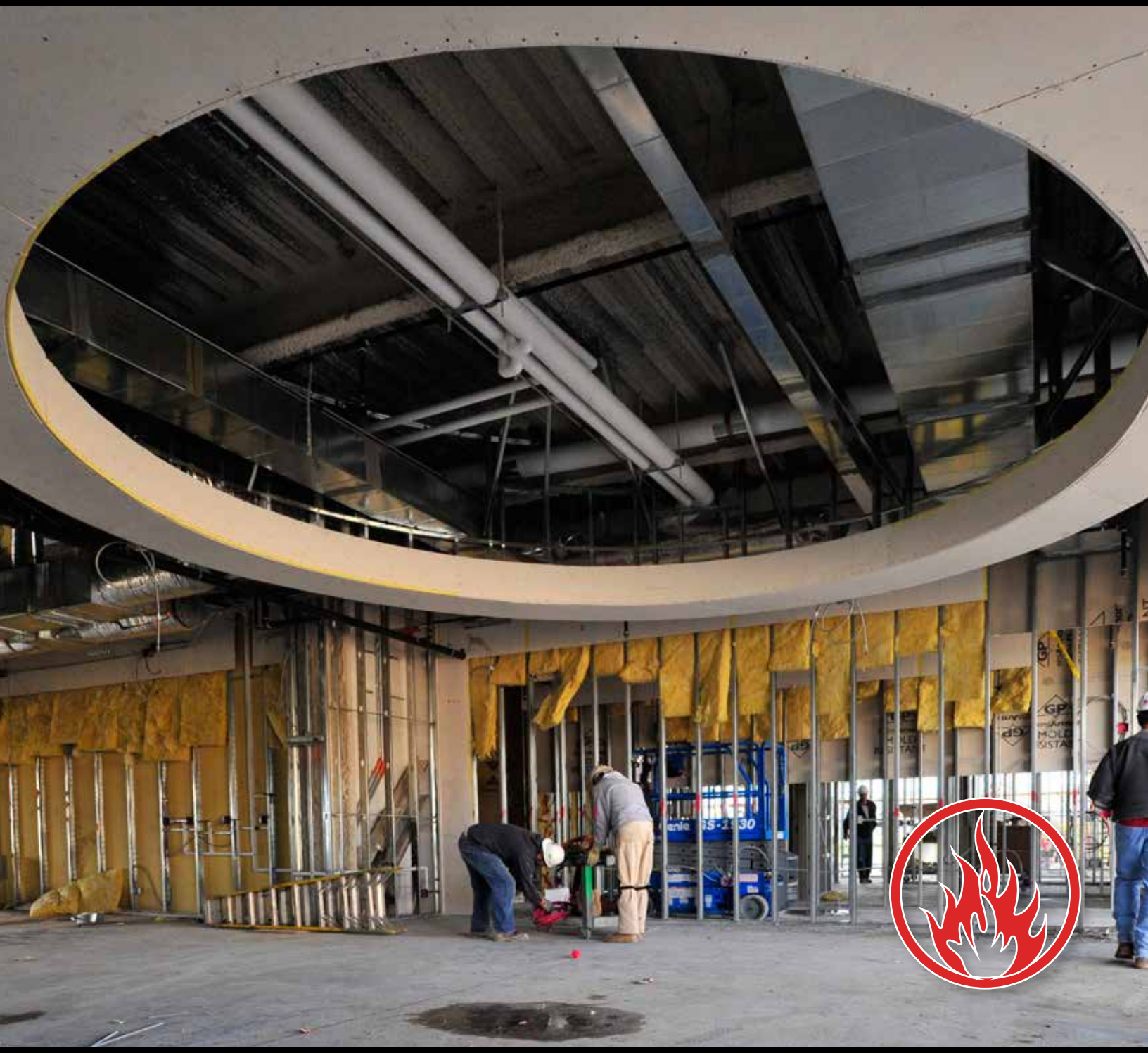

www.grabberman.com

VERSION 4.0

NOTES

Table of Contents

Page

Table of Contents i
General Certificate of Conformance iii
LEEDS Information
- United States LEEDs v
- Canadian LEEDs vii

Product Data Sheets
- GrabberGard EFC ix
- GrabberGard IFC xiii
- GrabberGard EFS xvii

Material Data Sheets
- GrabberGard EFC xxi
- GrabberGard IFC xxiv
- GrabberGard EFS xxvii

Firestopping Selection Tables
- Penetration Firestop Index xxxi
- Joint Firestop Index xxxvii

Listings
- UL Penetrations 1
- UL Joints 85
- WHi Listings 147
- ITS / Omega Point Curtain Wall Listings 221

Equipment and Installation
- Caulking Instructions GrabberGrad EFC & IFC 281
- Spraying Instructions GrabberGard EFS 287

Estimating Charts
- Corrugated Metal Deck – Mastic Spray – Calculation Guide 291
- Corrugated Metal Deck – Caulking – Calculation Guide 292
- Through Penetrations – Calculation Guide 293
- Construction Joints – Calculation Guide 294

Glossary of Terms 295
Quick Reference Listing Index
- Underwriters Laboratories Through Penetration Systems 301
- Underwriters Laboratories Joint Systems 302
- ITS - Omega Point Laboratories Joint Systems 302
- ITS - Warnock Hersey System Designs 303

Grabber Branch Locations 305

Table of Contents

General Certificate of Conformance

GRABBER CONSTRUCTION PRODUCTS
20 W Main St CT
Alpine, UT 84004

GrabberGard EFC, IFC & EFS

THESE PRODUCTS ARE TESTED TO THE FOLLOWING TEST STANDARDS

In the USA:

ASTM E-814	Standard Test Method for Fire Tests of Through Penetrations Fire Stops
ASTM E-1399	Cyclic Movement and Measuring the Minimum and Maximum Joint Widths of Architectural Joint Systems
UL 1479	Fire Tests of Through-Penetration Firestops
UL 2079	Tests for Fire Resistance of Building Joint Systems

In Canada:

ULC S115-M05	Standard Method of Fire Tests of Firestop Systems

TESTED BY THIRD PARTY AGENCIES

Underwriters Laboratories, Inc. (UL)
Intertek Testing Services Inc. – Warnock Hersey (WHI)

No Asbestos or PCBs are used or contained in this product.

George Rouhana
Executive Director

01/11/2013
Date

LEED is a trademark of the US Green Building Council

To Whom It May Concern:

Re: LEED Information on Grabber Construction Products' GrabberGard Firestopping Products

This letter will detail the contribution of Grabber Construction Products' GrabberGard firestopping products to the LEED® (Leadership in Energy and Environmental Design) Green Building Rating System® in accordance with LEED-NC Version 2009 For New Construction & Major Renovations.

In reference to LEED® Material and Resource (MR) – Credit 2 – Construction Waste Management – the following Grabber' materials are recyclable where facilities exist:

Packaging	Recyclable Product	Weight Per Unit
Carton	Cardboard	56 g – EBI-60
		70 g – Putty Stick
		190 g – 10 oz plastic tube
		350 g – 20 oz foil package
		410 g – 10 L plastic jar
		600 g – 29 oz plastic tube
10.1 oz (300ml) plastic tube	HDPE	49 g / Tube
20 oz (600ml) foil pack	Aluminum	5 g / Pack
29 oz (850ml) tube	Fiberboard	84 g / Tube
35.2 oz (1L) EZ pour plastic bottle	HDPE	50 g / Bottle
2.5 gallon (9.5L) plastic pai	HDPE	0.8 kg / Pail
2.65 gallon (10 L) plastic jar	HDPE	345 g / Jar
5 gallon (18.9L) plastic pail	HDPE	1.2 kg / Pail
Wooden pallet	Wood	21 kg / Pallet

In reference to LEED® Material and Resources – Credits 4.1 & 4.2 – Recycled Content, all GrabberGard firestopping products contain 5% post-consumer recycled content.

In reference to LEED® Material and Resources – Credit 5 - Regional Materials, Grabber can confirm that a minimum of 50% of the raw materials used in manufacturing the GrabberGard firestopping products are sourced and processed within a 500-miles radius of our manufacturing facility in Vancouver, BC.

If the project site is located within a 500-mile radius of our manufacturing site then this manufacturing site can contribute to earning Materials and Resource Credit 5.1 & 5.2.

The volatile organic content (VOC) of GrabberGard firestopping products are listed below and meets the minimum LEED® requirements for low-emitting materials. These materials can assist to earn Indoor Environmental Quality (IEQ) – Credit 4.1 – Low-Emitting Materials: Adhesives & Sealants (Architectural Sealants) & Credit 4.2 – Low-Emitting Materials: Paints & Coatings (Architectural Sealants).

GrabberGard Firestopping Product	VOC content [g/L]
EFC	32.5
IFC	37.1
EFS	81.3

If you have any additional questions, please feel free to contact us at (800) 237-4722.

To Whom It May Concern:

Re: LEED Information on Grabber Construction Products' GrabberGard Firestopping Products

This letter will detail the contribution of Grabber Construction Products' GrabberGard firestopping products to the LEED® (Leadership in Energy and Environmental Design) Green Building Rating System® in accordance with LEED-NC Version 2009 For New Construction & Major Renovations.

In reference to LEED® Material and Resource (MR) – Credit 2 – Construction Waste Management – the following Grabber' materials are recyclable where facilities exist:

Packaging	Recyclable Product	Weight Per Unit
Carton	Cardboard	56 g – EBI-60
		70 g – Putty Stick
		190 g – 10 oz plastic tube
		350 g – 20 oz foil package
		410 g – 10 L plastic jar
		600 g – 29 oz plastic tube
10.1 oz (300ml) plastic tube	HDPE	49 g / Tube
20 oz (600ml) foil pack	Aluminum	5 g / Pack
29 oz (850ml) tube	Fiberboard	84 g / Tube
35.2 oz (1L) EZ pour plastic bottle	HDPE	50 g / Bottle
2.5 gallon (9.5L) plastic pai	HDPE	0.8 kg / Pail
2.65 gallon (10 L) plastic jar	HDPE	345 g / Jar
5 gallon (18.9L) plastic pail	HDPE	1.2 kg / Pail
Wooden pallet	Wood	21 kg / Pallet

In reference to LEED® Material and Resources – Credits 4.1 & 4.2 – Recycled Content, all GrabberGard firestopping products contain 5% post-consumer recycled content.

In reference to LEED® Material and Resources – Credit 5 - Regional Materials, Grabber can confirm that a minimum of 50% of the raw materials used in manufacturing the GrabberGard firestopping products are sourced and processed within a 500-miles radius of our manufacturing facility in Vancouver, BC.

If the project site is located within a 500-mile radius of our manufacturing site then this manufacturing site can contribute to earning Materials and Resource Credit 5.1 & 5.2.

The volatile organic content (VOC) of GrabberGard firestopping products are listed below and meets the minimum LEED® requirements for low-emitting materials. These materials can assist to earn Indoor Environmental Quality (IEQ) – Credit 4.1 – Low-Emitting Materials: Adhesives & Sealants (Architectural Sealants) & Credit 4.2 – Low-Emitting Materials: Paints & Coatings (Architectural Sealants).

GrabberGard Firestopping Product	VOC content [g/L]
EFC	32.5
IFC	37.1
EFS	81.3

If you have any additional questions, please feel free to contact us at (800) 237-4722.

EFC - PDS

PRODUCT DATA SHEET
GRABBERGARD EFC

Description

GRABBERGARD EFC is a superior performance latex-based endothermic firestop caulk. It has excellent adhesion and bonding characteristics and will not slump or sag out after it has been properly installed. GRABBERGARD EFC elastomeric caulk has been designed to stop the passage of fires, smoke and fumes through fire-rated assemblies after it has been fully cured. GRABBERGARD EFC is chemically compatible with plastic pipes and cable jackets and is water resistant after fully cured. Once cured Grabbergard EFC provides a durable and flexible firestop and can be repaired if damaged or cut.

Applications

GRABBERGARD EFC firestop caulk provides an effective firestop seal when used as a single or multiple component system for through-penetrations, construction joints and voids. To make certain installation is correct, consult manufacturer's current listings, as well as, Third Party published Fire Resistance Directories and/or their websites. GRABBERGARD EFC common uses and features are listed below:

Used on: Single and multiple penetrations

Metallic pipes
- Copper, steel, cast iron
- Conduits

Non-metallic pipes
- ABS, CPVC, FRPP, PE, PEX, PVC
- Rigid and ENT conduit

Insulated pipes
- Fiberglass
- AB/PVC

Electrical cables and wires
- Jacket & non-jacketed

Cable trays

Mechanical ducts

Construction joints/gaps
- Top-of-Wall
- Horizontal and vertical joints
- Perimeter floor joints

Voids

Common construction substrate materials:
- Concrete
- Concrete block
- Steel deck
- Wood
- Gypsum wallboard

Features: Red Color

Non-toxic

Safe and easy to use

Easy clean up (Water Only)

Low volatile organic content (VOC)

No asbestos or PCB

Water resistance (when fully cured)

Mildew resistant (when fully cured)

Paintable (with latex based paints)

Excellent application characteristics
- Flows easily
- No slump
- Superior bond and adhesion

Excellent acoustic properties

Seals smoke and gases

One-component systems

Advantages

Endothermic – When GRABBERGARD EFC is exposed to high temperatures or direct fire, it releases water vapor, forms a solid char and retards the spread of fire.

Single Component

GRABBERGARD EFC Caulk can be used as a single component firestop in many applications. Just install the caulk directly into the opening without using fibrous insulation materials. In many situations GRABBERGARD EFC will replace the more conventional intumescent firestop devices such as pipe collars and wrap strips. This will reduce both the cost and installation time.

Versatility

GRABBERGARD EFC adheres to dry and damp concrete, wood, metals and other common construction material surfaces to form an air and watertight bond. GRABBERGARD EFC can be painted over using a latex-based paint after fully cured.

Flexibility

When installed GRABBERGARD EFC is properly installed in construction joints it will allow up to 33 per cent extension and compression movement of the intersecting assemblies. It will also accommodate longitudinal and lateral movement of through and partial service penetrating items installed in the assembly. GRABBERGARD EFC will remain flexible after it has fully cured.

Disclaimer: All technical advice, recommendations and services rendered by the seller gratis. They are based on technical data, which the seller believes to be reliable, and are intended for use by persons having the skills and know how, at their own discretion and risk. In no event will the seller be liable for any consequential damages arising out of the use of this product.

July 2012

EFC - PDS

PRODUCT DATA SHEET
GRABBERGARD EFC

Limitations

Consult the Installation Instructions, Storage and Handling and Transportation Sections. Exposure to rain, running or standing water; before, the sealant is cured may cause the installed material(s) to wash out. The curing process occurs naturally through the evaporation of its water content into the atmosphere. Slower cure times may be experienced if the sealant is installed at low temperatures, damp and/or in high humidity environments. Any materials used in the firestop system for damming, insulation or support that may not allow for the free passage of air could result in longer curing times. The environment in which the compound is being used should be considered when estimating cure times.

Compliance/Approvals

GRABBERGARD EFC has been Third Party tested for many firestop applications. They meet or exceed the requirements of ASTM E 814; ASTM E 119; UL 1479; UL 2079; ULC S 115-M95; ULC S 101; ASTM E 84. Underwriters Laboratories (UL) and Intertek Warnock Hersey are Third Party fire endurance testing agencies accredited by ICBO, BOCA, and SBCCI (National Evaluation Services) in the United States.

Additional Testing

GRABBERGARD EFC caulk becomes an integral component in a complete building system of walls, floor/ceiling assemblies, service penetration, joints and the like. For this reason, its physical compatibility to other materials used in these complex configurations requires more than the routine firestopping product testing. The results of these additional tests are listed in Table 1,Physical and Chemical Properties.

GRABBERGARD EFC caulk has proven that it has all the physical and chemical characteristics desired in a firestopping product. After it has been installed and fully cured, it has excellent stability and flexibility, even after four weeks at freezing temperatures of -15°F (-26°C) and exposure to extreme temperatures of 300 F(149°C) for 24 hours. Dimensional changes were well within the accepted standards (<2% per ASTM C 356). Dynamic testing has demonstrated the high elasticity properties of GRABBERGARD EFC.

Installation Instructions

GRABBERGARD EFC must be installed in compliance with the listed system designs published by Third Party testing laboratories (UL, ITS Warnock Hersey). Refer to their respective published Fire Resistance Directories and/or their Websites. GRABBERGARD EFC does not require mineral wool insulation in many applications.

Prep-work

To install properly, remove excessive dust, dirt, debris, grease, oil and standing water.

Application

Apply caulking material with standard cartridge or bulk-loading application guns or trowel in place with standard toweling tools. Install the required amount of caulking material into the opening using sufficient pressure to ensure it is in contact with all surfaces, substrates and/or penetrating items. The manufacturer recommends tooling the surface with a moist putty knife or similar tooling utensil. Tooling the caulking material will create a stronger bond and a smooth finish especially on irregular or porous surfaces. Do not apply GRABBERGARD EFC to mineral wool that is or was wet from exposure to water, standing water, rain or snow.

Caution: Mineral wool may cause eye, skin or respiratory tract irritation. Avoid contact with eyes, skin of clothing. Recommend using gloves and goggles. Refer to mineral wool manufacturer's Material Safety Data Sheets.

Installation Temperature

For best results, installation temperatures should be between 45°-90°F(7°-32°C).

Maintenance

No special maintenance is required after the GRABBERGARD EFC sealant is installed and fully cured. If, after installation, the GRABBERGARD EFC sealant is damaged or cut, repairs should be made with the same sealant.

Disclaimer: All technical advice, recommendations and services rendered by the seller gratis. They are based on technical data, which the seller believes to be reliable, and are intended for use by persons having the skills and know how, at their own discretion and risk. In no event will the seller be liable for any consequential damages arising out of the use of this product.

July 2012

EFC - PDS

PRODUCT DATA SHEET
GRABBERGARD EFC

Manufacturer's Recommendations

The manufacturer recommends this product be installed by those trained in proper installation procedures (Approved Installer Card) and be able to read and understand a firestop system design listing (i.e. UL or WHi Listed System Design).

Storage and Handling

Keep product stored in a protected covered area in its original unopened containers. Manufacturer recommends storage temperatures to between 40°-90°F(4°-32°C).

DO NOT ALLOW TO FREEZE

Product has a shelf life of one(1) year. Stock rotation program is recommended.

Transportation

Recommended transportation temperatures should be between 40°-90°F(4°-32°C).

DO NOT ALLOW TO FREEZE

First Aid

In case of contact with eyes, flush with water and consult a physician. Skin contact, clean up thoroughly with water or soapy water. Consult a physician if eye or skin irritation develops or is persistent. SEE MSDS FOR ADDITIONAL INFORMATION.

Availability

GRABBERGARD EFC caulk is supplied in:

- 10 fl. oz. (300ml) plastic cartridges
- 29 fl. oz. (850ml) cartridges
- 20 fl. oz. (590ml) sausages
- 5 gal. (18.9L) tapered plastic pails

Coverage

Estimated product usage will vary depending on opening size and configuration. Check GRABBERGARD'S estimating charts for coverage.

Warranty

Grabber Construction Products will not accept liability for more than product refund. Any claim regarding product defect must be received in writing within 1 year from date of shipment. Grabber makes no other Warranty or Guarantee express or implied, including warranties of fitness for a particular purpose or merchantability. The seller shall assume no other liability for incidental or consequential damages arising out of the sale or use of this product.

Technical Services

For technical information and assistance regarding application information, code requirements and performance specifications:
Toll Free 1-866-237-GRAB(4722)
Web Site www.grabberman.com

EFC - PDS

Disclaimer: All technical advice, recommendations and services rendered by the seller gratis. They are based on technical data, which the seller believes to be reliable, and are intended for use by persons having the skills and know how, at their own discretion and risk. In no event will the seller be liable for any consequential damages arising out of the use of this product.

July 2012

EFC - PDS

PRODUCT DATA SHEET
GRABBERGARD EFC

Table 1 – Physical and Chemical Properties

As Supplied

Type of Polymer	Waterborne Resin
Odor	Mild Latex
Solids Content (Wt%)	77±2%
Application Temperatures	45°-90°F(7°-32°C)
Viscosity (ASTM D-2196)	560000-744000cps
Extrudability	Passed
Color - (ASTM C-834)	Rust Red
Specific Gravity - (ASTM D-1475)	1.40-1.50
Dry Time - (ASTM D-1640)	
Dry to touch @ 6mils	20-30 mins
Full Cure Time (depends on thickness & environment)	7-21 days
pH - (ASTM E-70)	8-9

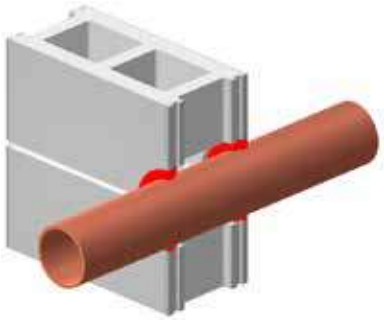

Typical Pipe Penetration

As Cured

In Service Temperature	up to 120°F(49°C)
Moisture Absorption	<4%
Stability [Dimensional, Cracking, Blisters, Flexibility]	Passed
Corrosion - (ASTM C-655) [for Aluminum, Copper, Steel, Galvanized Steel, Stainless Steel]	Passed
Volume Shrinkage - (ASTM C-1241)	Passed
Chemical Compatibility - (ASTM D-543)	Passed
Slump Test - (ASTM D-2202 - Modified)	Passed
Hardness - (ASTM D-2240, Shore A)	22
Freeze/Thaw - (ASTM D-2243)	Excellent
Tensile Properties - (ASTM D-2370)	
Tensile Strength	26 psi
Maximum Elongation	1400%
Corrosion - (ASTM D-5894)	Passed
Surface Burning Characteristics - (ASTM E-84)	
Flame Spread Index	<25
Smoke Developed Index	<50
STC Sound Transmission Loss - (ASTM 90-99)	Full Recovery

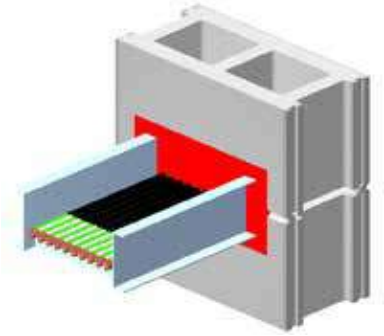

Typical Cable Tray Penetration

Disclaimer: All technical advice, recommendations and services rendered by the seller gratis. They are based on technical data, which the seller believes to be reliable, and are intended for use by persons having the skills and know how, at their own discretion and risk. In no event will the seller be liable for any consequential damages arising out of the use of this product.

July 2012

PRODUCT DATA SHEET
GRABBERGARD IFC

Description

GRABBERGARD IFC caulk is a latex-based, intumescent caulk designed to stop the passage of fire, smoke, and fumes through fire-rated separations. GRABBERGARD IFC has been tested in many different 1, 2, 3 and 4 hour rated floor and wall assemblies. It has excellent adhesion qualities with most common construction materials. After fully cured, GRABBERGARD IFC forms a durable, flexible water resistant and paintable seal.

Applications

GRABBERGARD IFC firestop caulk provides an effective firestop seal when used as a single or multiple component system for through-penetrations, construction joints and voids. To make certain installation is correct, consult manufacturer's current listings, as well as, Third Party published Fire Resistance Directories and/or their websites. GRABBERGARD IFC common uses and features are listed below:

Used on: Single and multiple penetrations

Metallic pipes
- Copper, steel, cast iron
- Conduits

Non-metallic pipes
- ABS, CPVC, FRPP, PE, PEX, PVC
- Rigid and ENT conduit

Insulated pipes
- Fiberglass
- AB/PVC

Electrical cables and wires
- Jacket & non-jacketed

Mechanical ducts

Cable trays

Construction joints/gaps
- Top-of-Wall
- Horizontal and vertical joints
- Perimeter floor joints

Voids

Common construction substrate materials:
- Concrete
- Concrete block
- Steel deck
- Wood
- Gypsum wallboard

Features: Red Color

Non-toxic

Safe and easy to use

Easy clean up (Water Only)

Low volatile organic content (VOC)

No asbestos or PCB

Water resistance (when fully cured)

Mildew resistant (when fully cured)

Paintable (with latex based paints)

Excellent application characteristics
- Flows easily
- No slump
- Superior bond and adhesion

Excellent acoustic properties

Seals smoke and gases

High intumescent characteristics

One-component systems

Advantages

Intumescent – When exposed to high temperatures or fire, GRABBERGARD IFC caulk expands in volume to quickly close off voids left by melting or burning construction materials.

Single Component

GRABBERGARD IFC caulk can be installed directly into an opening or joint without mixing or the use of additional materials such as metal collars or wraps. This simplifies installation and minimizes the materials needed at the jobsite.

Versatility

GRABBERGARD IFC caulk adheres easily to dry or damp concrete, wood, metal and other common building material surfaces.

Flexibility

When installed GRABBERGARD IFC caulk, when used in joints, accommodates up to 33 percent joint movement compression/extension. It remains flexible and fully resistant to water after fully cured.

Limitations

Consult the Installation Instructions, Storage and Handling and Transportation Sections. Exposure to rain, running or standing water; before, the sealant is cured may cause the installed material(s) to wash out. The curing process occurs naturally through the evaporation of its water content into the atmosphere. Slower cure times may be experienced if the sealant is installed at low temperatures, damp and/or in high humidity environments. Any materials used in the firestop system for damming, insulation or support that may not allow for the free passage of air could result in longer curing times. The environment in which the compound is being used should be considered when estimating cure times.

Disclaimer: All technical advice, recommendations and services rendered by the seller gratis. They are based on technical data, which the seller believes to be reliable, and are intended for use by persons having the skills and know how, at their own discretion and risk. In no event will the seller be liable for any consequential damages arising out of the use of this product.

July 2012

IFC - PDS

PRODUCT DATA SHEET
GRABBERGARD IFC

Compliance/Approvals

GRABBERGARD IFC caulk has been tested for hundreds of firestop installations and meets or exceeds the requirements of ASTM E 814, ASTM E 119, UL 1479, UL 2079, ULC S115-M95, and CAN/ULC S101. Underwriters Laboratories (UL) and Intertek Testing Service (ITS) NA Ltd (Warnock Hersey) are third party fire endurance testing agencies accredited by ICBO, BOCA and SBCCI (National **Evaluation Services) in the United States.**

Additional Testing

GRABBERGARD IFC caulk becomes an integral component in a complete building systems of walls, pipe penetrations, HVAC ducts, joints, and the like. For this reason, its physical compatibility to other products used in these complex configurations requires more than the routine firestopping products testing. The results of these additional tests are listed in Table 1, GRABBERGARD IFC Caulk Physical and Chemical Properties.

GRABBERGARD IFC Caulk has proven that it has all the physical characteristics desired in a firestopping product. Once installed and fully cured, it has excellent stability, even after four weeks at freezing temperatures of -15°F (-26°C) and exposure to extreme temperatures of 300°F(149°C) for 24 hours. Dimensional changes were well within the accepted standards (<2% per ASTM C-356). Dynamic testing has demonstrated GRABBERGARD IFC caulk's highly elastic properties.

When tested in simulated fire conditions, this intumescent caulk expanded uniformly, to at least eight times its original volume, without causing failure to other components. When tested per ASTM E-84, the flame spread index was less than 25 and smoke development index was less than 50.

Corrosion and microbial growth were tested using procedures outlined in ASTM C-665. GRABBERGARD IFC caulk does not promote the corrosion of steel, copper, or aluminum, but may cause discoloration on galvanized metal surfaces. Also, GRABBERGARD IFC caulk does not support mold growth.

The use of GRABBERGARD IFC caulk will restore the acoustical performance level (STC rating) to firewall systems used in standard building construction when tested according to ASTM E-90-99.

Installation Instructions

GRABBERGARD IFC must be installed in compliance with a listed system design published by a third party testing agency (UL, ITS). Refer to their respective published Fire Resistance Directory or their web site.

Prep-work

To install properly, remove excessive dust, dirt, debris, grease, oil and standing water.

Application

Apply caulking material with standard cartridge or bulk-loading application guns or trowel in place with standard toweling tools. Install the required amount of caulking material into the opening using sufficient pressure to ensure it is in contact with all surfaces, substrates and/or penetrating items. The manufacturer recommends tooling the surface with a moist putty knife or similar tooling utensil. Tooling the caulking material will create a stronger bond and a smooth finish especially on irregular or porous surfaces. Do not apply GRABBERGARD IFC to mineral wool that is or was wet from exposure to water, standing water, rain or snow.

Caution: Mineral wool may cause eye, skin or respiratory tract irritation. Avoid contact with eyes, skin of clothing. Recommend using gloves and goggles. Refer to mineral wool manufacturer's Material Safety Data Sheets.

Installation Temperature

For best results, installation temperatures should be between 45°-90°F(7°-32°C).

Maintenance

No special maintenance is required after the GRABBERGARD IFC sealant is installed and fully cured. If, after installation, the GRABBERGARD IFC sealant is damaged or cut, repairs should be made with the same sealant.

Disclaimer: All technical advice, recommendations and services rendered by the seller gratis. They are based on technical data, which the seller believes to be reliable, and are intended for use by persons having the skills and know how, at their own discretion and risk. In no event will the seller be liable for any consequential damages arising out of the use of this product.

July 2012

IFC - PDS

PRODUCT DATA SHEET
GRABBERGARD IFC

Manufacturer's Recommendations

The manufacturer recommends this product be installed by those trained in proper installation procedures (Approved Installer Card) and be able to read and understand a firestop system design listing (i.e. UL or WHi Listed System Design).

Storage and Handling

Keep product stored in a protected covered area in its original unopened containers. Manufacturer recommends storage temperatures to between 40°-90°F(4°-32°C).

DO NOT ALLOW TO FREEZE

Product has a shelf life of one(1) year. Stock rotation program is recommended.

Transportation

Recommended transportation temperatures should be between 40°-90°F(4°-32°C).

DO NOT ALLOW TO FREEZE

First Aid

In case of contact with eyes, flush with water and consult a physician. Skin contact, clean up thoroughly with water or soapy water. Consult a physician if eye or skin irritation develops or is persistent. SEE MSDS FOR ADDITIONAL INFORMATION.

Availability

GRABBERGARD IFC caulk is supplied in:

- 10 fl. oz. (300ml) plastic cartridges
- 29 fl. oz. (850ml) cartridges
- 20 fl. oz. (590ml) sausages
- 5 gal. (18.9L) tapered plastic pails

Coverage

Estimated product usage will vary depending on opening size and configuration. Check GRABBERGARD'S estimating charts for coverage.

Warranty

Grabber Construction Products will not accept liability for more than product refund. Any claim regarding product defect must be received in writing within 1 year from date of shipment. Grabber makes no other Warranty or Guarantee express or implied, including warranties of fitness for a particular purpose or merchantability. The seller shall assume no other liability for incidental or consequential damages arising out of the sale or use of this product.

Technical Services

For technical information and assistance regarding application information, code requirements and performance specifications:

Toll Free 1-866-237-GRAB(4722)
Web Site www.grabberman.com

Disclaimer: All technical advice, recommendations and services rendered by the seller gratis. They are based on technical data, which the seller believes to be reliable, and are intended for use by persons having the skills and know how, at their own discretion and risk. In no event will the seller be liable for any consequential damages arising out of the use of this product.

July 2012

IFC - PDS

PRODUCT DATA SHEET
GRABBERGARD IFC

Table 1 – Physical and Chemical Properties

As Supplied

Type of Polymer		Acrylic Emulsion
Odor		Mild Latex
Solids Content (Wt%)		82%
Application Temperatures		45°-90°F(7°-32°C)
Viscosity (ASTM D-2196)		640000-960000cps
Extrudability		Passed
Color - (ASTM C-834)		Rust Red
Specific Gravity - (ASTM D-1475)		1.40-1.50
Dry Time - (ASTM D-1640)		
Dry to touch @ 6mils		20 mins
Full Cure Time	(depends on thickness & environment)	7-21 days
pH - (ASTM E-70)		8-9

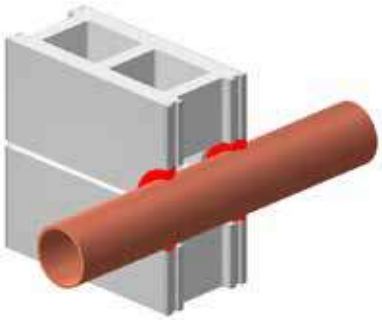

Typical Pipe Penetration

As Cured

In Service Temperature		up to 120°F(49°C)
Moisture Absorption		<4%
Stability [Dimensional, Cracking, Blisters, Flexibility]		Passed
Corrosion - (ASTM C-655)	[for Aluminum, Copper, Steel, Galvanized Steel, Stainless Steel]	Passed
Volume Shrinkage - (ASTM C-1241)		<20%
Chemical Compatibility - (ASTM D-543)		Passed
Slump Test - (ASTM D-2202 - Modified)		Passed
Hardness - (ASTM D-2240, Shore A)		26
Freeze/Thaw - (ASTM D-2243)		Excellent
Tensile Properties - (ASTM D-2370)		
Tensile Strength		41.8 psi
Maximum Elongation		667%
Corrosion - (ASTM D-5894)		Passed
Surface Burning Characteristics - (ASTM E-84)		
Flame Spread Index		<25
Smoke Developed Index		<50
STC Sound Transmission Loss - (ASTM 90-99)		Full Recovery

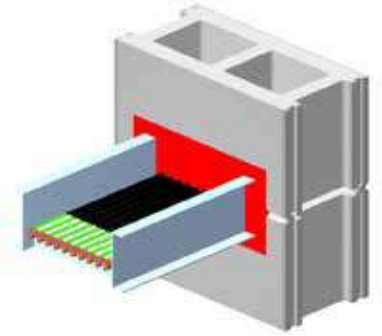

Typical Cable Tray Penetration

Disclaimer: All technical advice, recommendations and services rendered by the seller gratis. They are based on technical data, which the seller believes to be reliable, and are intended for use by persons having the skills and know how, at their own discretion and risk. In no event will the seller be liable for any consequential damages arising out of the use of this product.

July 2012

PRODUCT DATA SHEET
GRABBERGARD EFS

Description

GRABBERGARD EFS is a sprayable elastomeric latex-based firestop mastic coating. This high solids compound is designed to stop the passage of fires, smoke and fumes through fire rated assemblies. GRABBERGARD EFS spray or brush-applied coating has been formulated to adhere to all common construction materials. It has been tested in rated assemblies to provide firestopping protection from 1 to 4 hours. After it has fully cured, GRABBERGARD EFS elastomeric coating remains flexible to accommodate normal building movement.

Applications

GRABBERGARD EFS spray material provides an effective firestop for joints and gaps at the intersection of similar or dissimilar rated assemblies. (i.e. top of wall; floor to floor; floor to wall; wall to wall; floor/ceiling steel deck; assembly to gypsum wallboard and concrete walls). GRABBERGARD EFS is also used on pipes, cables, conduit and cable tray installations through floors and walls. It has an installation advantage over caulk material when the service penetrations are in larger openings. For these applications GRABBERGARD EFS can be applied using a brush or conventional airless spray equipment. To make certain installation is correct, consult manufacturer's current listings, as well as, Third Party published Fire Resistance Directories and/or their websites. GRABBERGARD EFS common uses and features are listed below:

Used on: Single and multiple penetrations

Metallic pipes
- Copper, steel, cast iron
- Conduits

Electrical cables and wires
- Jacket & non-jacketed

Cable trays

Construction joints/gaps
- Top-of-Wall
- Horizontal and vertical joints
- Curtain wall safing joints
- Perimeter floor joints
- Control joints
- Floor to floor joints
- Wall to wall joints

Voids

Features: Red Color

Non-toxic
Safe and easy to use
Easy clean up (Water Only)
Low volatile organic content (VOC)
No asbestos or PCB
Water resistance (when fully cured)
Mildew resistant (when fully cured)
Paintable (with latex based paints)
Easy and safe to apply
Adheres to dry or damp surfaces
Adheres to common construction substrate materials:
- Concrete
- Concrete block
- Steel deck
- Wood
- Gypsum wallboard

Up to 33% joint movement compression/extension
Remains flexible after fully cured

Advantages

Endothermic – When exposed to high temperatures or fire, GRABBERGARD EFS absorbs the heat and provides a fire barrier.

System Design

Whether for small or large joints, GRABBERGARD EFS spray is designed to be part of a multiple component system used with mineral wool and other damming materials. All these materials used in conjunction with one another maximize the firestopping characteristics.

Versatility

When applied properly, GRABBERGARD EFS will adhere to most common building materials. GRABBERGARD EFS bonds with dry or damp concrete as well as drywall, metals and wood. After GRABBERGARD EFS has fully cured it provides a strong bond, will not readily pull away and accommodates compressive and extension movement up to 33 per cent. GRABBERGARD EFS can be painted with a latex paint after it has completely cured.

Flexibility

When installed GRABBERGARD EFS caulk, when used in joints, accommodates up to 33 percent joint movement compression/extension. It remains flexible and fully resistant to water after curing.

Disclaimer: All technical advice, recommendations and services rendered by the seller gratis. They are based on technical data, which the seller believes to be reliable, and are intended for use by persons having the skills and know how, at their own discretion and risk. In no event will the seller be liable for any consequential damages arising out of the use of this product.

July 2012

EFS - PDS

PRODUCT DATA SHEET
GRABBERGARD EFS

Limitations

Consult the Installation Instructions, Storage and Handling and Transportation Sections. Exposure to rain, running or standing water; before, the sealant is cured may cause the installed material(s) to wash out. The curing process occurs naturally through the evaporation of its water content into the atmosphere. Slower cure times may be experienced if the sealant is installed at low temperatures, damp and/or in high humidity environments. Any materials used in the firestop system for damming, insulation or support that may not allow for the free passage of air could result in longer curing times. The environment in which the compound is being used should be considered when estimating cure times. This product is not designed to be a waterproof seal and should not be installed where there will be constant wet conditions or immersed in water continuously.

Compliance/Approvals

GRABBERGARD EFS has been installed in many system designs and Third Party tested to meet or exceed the requirements of ASTM E 814, ASTM E 119, ASTM E 1399,UL 1479, UL 2079, ULC S 115-M95, ULC S 101, ASTM E 84. Construction joints recently tested in conformance with "Perimeter Fire Containment Systems" (assimilation of NFPA 285, ANS/UL 2079). Underwriters Laboratories (UL) and Intertek Testing Service (ITS) NA Ltd (Warnock Hersey) are third party fire endurance-testing agency accredited by ICBO, BOCA and SBCCI (NES) in the United States.

Additional Testing

GRABBERGARD EFS spray material becomes an integral component in a complete building system of walls, floors and ceilings. Its physical and chemical compatibility with other materials used in these complex configurations requires more than just the necessary firestop tests. The results of additional and extensive tests are listed in Table 1. GRABBERGARD EFS – Physical and Chemical Properties.

GRABBERGARD EFS spray has been tested and meets the classifications for less than 25 flame spread index and less than 50 smoke development index (NFPA Class "A", Building Code Class "1").

GRABBERGARD EFS has been tested for chemical compatibility with all types of metal and plastic pipes and plastic or nylon coated wires that are listed in the system designs.

Installation Instructions

GRABBERGARD EFS must be installed in compliance with a listed system design published by a third party testing agency (UL, ITS). Refer to their respective published Fire Resistance Directory or their web site.

Prep-work

To install properly, remove excessive dust, dirt, rust, debris, grease, oil and standing water. Atmospheric temperatures should be considered. If the product is colder than the recommended temperatures, warming before attempting to spray should be considered. In cold temperatures the building should be sealed or heat protected. The spray equipment should be clean of material from previous applications. GRABBERGARD EFS can also be applied with a brush.

Application

Insulation and backing materials should be installed in accordance with a published system design (i.e. type, density, compression and orientation). When spraying GRABBERGARD EFS use airless spray equipment that has min 3000psi capabilities and reversible spray tips. (Consult the manufacturer for more information on equipment setup, hose, spray guns, tips, etc.) To achieve a dry thickness of 60-mil (1/16 in.) GRABBERGARD EFS should be applied at 80-mil (1/12 in.). All research testing was performed using a Spray Tech EP2510 airless sprayer with: 50 feet of 3/8 in. hose, Graco Flex Plus spray gun, tip sizes from 0.019 to 0.031, fan with from 4 in. to 12 in. Do not apply GRABBERGARD EFS to mineral wool that is or was wet from exposure to water, standing water, rain or snow.

Caution: Mineral wool may cause eye, skin or respiratory tract irritation. Avoid contact with eyes, skin of clothing. Recommend using gloves and goggles. Refer to mineral wool manufacturer's Material Safety Data Sheets.

Disclaimer: All technical advice, recommendations and services rendered by the seller gratis. They are based on technical data, which the seller believes to be reliable, and are intended for use by persons having the skills and know how, at their own discretion and risk. In no event will the seller be liable for any consequential damages arising out of the use of this product.

July 2012

EFS - PDS

PRODUCT DATA SHEET
GRABBERGARD EFS

Installation Temperature

For best results, installation temperatures should be between 43°-90°F(6°-32°C).

Maintenance

No special maintenance is required after the GRABBERGARD EFS sealant is installed and fully cured. If, after installation, the GRABBERGARD EFS sealant is damaged or cut, repairs should be made with the same sealant. GRABBERGARD EFS will form a full chemical bond and adhere to itself.

Manufacturer's Recommendations

The manufacturer recommends this product be installed by those trained in proper installation procedures (Approved Installer Card) and be able to read and understand a firestop system design listing (i.e. UL or WHi Listed System Design).

Storage and Handling

Keep product stored in a protected covered area in its original unopened containers. Manufacturer recommends storage temperatures to between 40°-90°F(4°-32°C).

DO NOT ALLOW TO FREEZE

Product may become damaged and unusable if exposed to extreme freezing conditions.

Do not dilute with water.

No mixing or stirring of the product is required.

Product has a shelf life of one(1) year. Stock rotation program is recommended.

Transportation

Product should be transported in a protection-equipped carrier when very low or high atmospheric temperatures will be experienced.

Recommended transportation temperatures should be between 40°-90°F(4°-32°C).

DO NOT ALLOW TO FREEZE

First Aid

In case of contact with eyes, flush with water and consult a physician. Skin contact, clean up thoroughly with water or soapy water. Consult a physician if eye or skin irritation develops or is persistent. SEE MSDS FOR ADDITIONAL INFORMATION.

Availability

GRABBERGARD EFS spray is supplied in:

- 5 gallon (18.9L) tapered plastic pails

Coverage

Estimated product usage will vary depending on opening size and configuration. Check GRABBERGARD'S estimating charts for coverage.

Warranty

Grabber Construction Products will not accept liability for more than product refund. Any claim regarding product defect must be received in writing within 1 year from date of shipment. Grabber makes no other Warranty or Guarantee express or implied, including warranties of fitness for a particular purpose or merchantability. The seller shall assume no other liability for incidental or consequential damages arising out of the sale or use of this product.

Technical Services

For technical information and assistance regarding application information, code requirements and performance specifications:

Toll Free 1-866-237-GRAB(4722)
Web Site www.grabberman.com

Disclaimer: All technical advice, recommendations and services rendered by the seller gratis. They are based on technical data, which the seller believes to be reliable, and are intended for use by persons having the skills and know how, at their own discretion and risk. In no event will the seller be liable for any consequential damages arising out of the use of this product.

July 2012

EFS - PDS

PRODUCT DATA SHEET
GRABBERGARD EFS

Table 1 – Physical and Chemical Properties

As Supplied

Type of Polymer		Waterborne Resin
Odor		Mild Latex
Solids Content (Wt%)		68±5%
Application Temperatures		43°-90°F(6°-32°C)
Viscosity (ASTM D-2196)		50000-60000cps
Color - (ASTM C-834)		Red
Specific Gravity - (ASTM D-1475)		1.15-1.35
Dry Time - (ASTM D-1640)		
Dry to touch @ 6mils		20-30 mins
Full Cure Time	(depends on thickness & environment)	7-14 days
pH - (ASTM E-70)		8-9

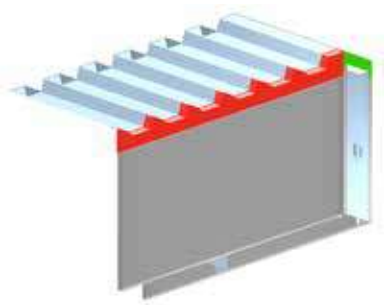

Typical Head of Wall Joint

As Cured

In Service Temperature	up to 120°F(49°C)
Volume Shrinkage - (ASTM C-1241)	Passed
Freeze/Thaw - (ASTM D-2243)	Excellent
Tensile Properties - (ASTM D-2370)	
Tensile Strength	28 psi
Maximum Elongation	1000%
Sag Resistance - (ASTM D-4410)	Passed
Surface Burning Characteristics - (ASTM E-84)	
Flame Spread Index	<25
Smoke Developed Index	<50
Joint Movement - (ASTM E-1399) (compression/extension)	Passed
Sprayability	
Fan Pattern	Excellent
Volume Output	Excellent

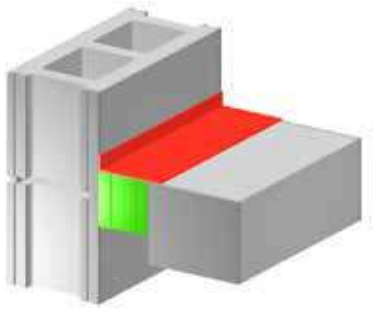

Typical Floor to Wall Joint

Disclaimer: All technical advice, recommendations and services rendered by the seller gratis. They are based on technical data, which the seller believes to be reliable, and are intended for use by persons having the skills and know how, at their own discretion and risk. In no event will the seller be liable for any consequential damages arising out of the use of this product.

July 2012

MSDS Name: GrabberGard EFC
Revision Date: August 30, 2012

Material Safety Data Sheet

1. Product and Company Identification

Product Name: GrabberGard EFC
Product Code: GGEFC10, GGEFC 20, GGEFC29, GGEFC5
Supplier: Grabber Construction Products
205 Mason Circle
Concord, CA 94520
Medical Emergency: Passive Fire Protection Partners, 1412 Derwent Way, Delta, BC V3M 6H9, (800) 810-1788
Product Information: 800-877-TURN (Concord, California) 8:00 a.m. - 4:00 p.m. PST

2. Composition/Information on Ingredients

Ingredient	CAS Number	% (wt.)	LC50 (rat)	LD50 (rat)	TLV	STEL
Calcium Carbonate	1317-65-3	< 50	N/A	N/A	N/A	N/E
Vinyl Acetate Polymers	Not disclosed	< 40	N/A	N/A	N/A	N/A
Water	7732-18-5	< 25	N/A	N/A	N/E	N/E
Auxiliary Chemicals	N/A	< 5	N/A	20 - 34 g/Kg	50 ppm	N/A
Color Pigment	1309-37-1	< 0.5	N/A	N/A	N/A	N/A

3. Physical Properties

Appearance / Physical State	Red, viscous compound	Specific Gravity (@25°C)	1.40 - 1.50
Odour	Mild odour	Evaporation Rate	< 1
Odour Threshold	Slightly aromatic odour	Boiling Point (°C)	> 100
Vapour Pressure (mm Hg)	18.51880	Freezing Point (°C)	0
Vapour Density (Air = 1)	of Water vapor	pH	8.0 – 9.0
Coefficient of H2O/Oil Distrib	Not determined	VOC contents (g/L)	32.5

4. Fire and Explosion Data

Flammability	No
Means of Extinction	Normal fire fighting procedures should be followed to avoid inhalation of smokes and gases.
Special Fire-fighting Procedures	Firefighters should wear the usual protective gear use self-contained breathing apparatus.
Auto-ignition Temperature (°C)	N/A
Flash Point (°C) / Method	N/A
Upper Flammable Limit (%,Volume)	N/A
Lower Flammable Limit (%,Volume)	N/A
Sensitivity to Mechanical Impact	No
Sensitivity to Static Discharge	No
Hazardous Combustion Products	Carbon Monoxide,Carbon Dioxide, Aliphaitic Hydrocarbons and Hydrocarbon Oxidation products.

MSDS Name: GrabberGard EFC
Revision Date: August 30, 2012

EFC - MSDS

Material Safety Data Sheet

5. Reactivity Data	
Stability	Stable at normal condition
Condition of Reactivity	Contact with incompatible substances
Incompatible Materials	Reacts with mineral acids and alkalis
Hazardous Decomposition Products	Dried films forced to burn will produce: Carbon Monoxide, Carbon Dioxide, and hydrocarbon oxidation products.

6. Toxicological Properties					
Routes of Exposure	√ Skin contact	√ Skin absorption	√ Eye contact	√ Inhalation	√ Ingestion
Effects of Acute Exposure to Product	Skin and eye irritation may occur after contact with the product.				
Effects of Chronic Exposure to Product	None known				
Exposure Limits	None known				
Irritancy of Product	Slight on skin and eyes				
Sensitization of Product	None known				
Carcinogenicity	None known				
Teratogenicity	None known				
Reproductive Toxicity	None known				

7. First Aid Measures	
Eye Contact	Flush with large quantities of water gently for 15 minutes and get medical attention.
Skin Contact	Wash with soap and water.
Inhalation	Remove affected person away from source of exposure to fresh air and get medical attention IMMEDIATELY
Ingestion	Get medical attention IMMEDIATELY.

8. Preventive Measures	
Engineering Controls	Standard industrial ventilation is recommended.
Personal Protective Equipment	Chemical safety glasses and gloves were required during normal use and handling.
Eye Protection (Specify)	Face shield or chemical goggles were recommended.
Skin Protection (Specify)	Chemical resistant nitrile, neoprene or rubber gloves were recommended if contact to the product directly.
Respiratory (Specify)	Respiratory protection is not normally required. Use NIOSH/MSHA approved respirator if condition warrant.
Other	

9. Precautions for Safe Handling and Use	
Handling Procedure and Equipment	N/A
Storage Requirement	Material should be kept in a closed container and stored between 4 – 32°C (40 –90°F)
Spill, Leak or Releases	Wear protective equipment during cleanup.
Waste Disposal	Care should be taken to ensure that the material or it's containers and disposed of in an approved facility, state, provincial and local regulations.
Special Shipping Instructions	DO NOT FREEZE

MSDS Name: GrabberGard EFC
Revision Date: August 30, 2012

Material Safety Data Sheet

10. Regulation Information	
WHMIS	Not controlled
HMIS	Health 1, Flammability 0, Reactivity 0
TDG Regulation	Not classified as a hazardous material.
TSCA	All ingredients of this product are on the inventory list.
DSL	All ingredients of this product are on the list.

11. Preparation Information	
Prepared by:	Chemical Laboratory, Passive Fire Protection Partners
Preparation Date:	11 March 2003
Telephone:	(604) 515-1788
Reason for Revision:	New formulation, rev 001, March 22, 2002 New format of MSDS, rev 002, September 16, 2004 Ingredient information updating, rev 003, November 10, 2006 MSDS reviewing, rev 004, December 30, 2008 Formulation updating, rev 005, August 24, 2009 Spelling mistake on Section of Precaution for Safe Handling and Use, rev 006, March 1, 2010 Formulation updating, rev007, January 3, 2011 Review, rev008, August 30, 2012
Revision Date:	August 30, 2012
Abbreviations Used:	**% (wt.)** = Weight Percentage **ACGIH** = American Conference of Governmental Industrial Hygienists **CAS Number** = Chemical Abstracts Series Number **DSL** = Domestic Substance List in Canada **H** = Hours **HMIS** = Hazardous Material Identification System **IARC** = International Agency for Research on Cancer **LC50** = Lethal Concentration, 50% **LD50** = Lethal Dose, 50% **MSHA** = Mine Safety and Health Administration **N/A** = Not Applicable or Not Available **N/E** = None Established **NIOSH** = The National Institute for Occupational Safety and Health **NTP** = National Toxicology Program **OSHA** = The Occupational Safety and Administration **STEL** = Short Term Exposure Limit **TDG** = Transportation of Dangerous Goods **TLV** = Threshold Limit Value **TSCA** = Toxic Substance Control Act in US **VOC** = Volatile Organic Compounds **WHMIS** = Workplace Hazardous Material Identification System

This information is provided in good faith and is correct to the best of Grabber Construction Products' knowledge as of the date hereof; however, Grabber makes no representation as to its completeness or accuracy. Customers are encouraged to make their own determination as to the suitability of this product for their purpose prior to use. Grabber disclaims responsibility to damages of any kind resulting from the use of this information. THERE ARE NO WARRANTIES OR REPRESENTATIONS, EXPRESS OR IMPLIED, INCLUDING THOSE OF MERCHANTABILITY OR FITNESS FOR A PARTICULAR PURPOSE WITH RESPECT TO THIS INFORMATION OR TO THE PRODUCT IT DESCRIBES.

MSDS Name: GrabberGard IFC
Revision Date: August 30, 2012

Material Safety Data Sheet

1. Product and Company Identification

Product Name: GrabberGard IFC
Product Code: GGIFC10, GGIFC 20, GGIFC29, GGIFC5
Supplier: Grabber Construction Products
205 Mason Circle
Concord, CA 94520
Medical Emergency: Passive Fire Protection Partners, 1412 Derwent Way, Delta, BC V3M 6H9, (800) 810-1788
Product Information: 800-877-TURN (Concord, California) 8:00 a.m. - 4:00 p.m. PST

2. Composition/Information on Ingredients

Ingredient	CAS Number	% (wt.)	LC50 (rat)	LD50 (rat)	TLV	STEL
Calcium Carbonate	1317-65-3	< 50	N/A	N/A	N/A	N/E
Acrylic Polymer	None known	< 45	N/A	N/A	N/A	N/A
Water	7732-18-5	< 25	N/A	N/A	N/E	N/E
Graphite	7782-42-5	< 10	N/A	N/A	2.0 mg/M3	N/A
1,2-Propylene Glycol	57-55-6	< 2	N/A	20–34 g/Kg	50 ppm	N/A
Color Pigment	1309-37-1	< 1	N/A	N/A	N/A	N/A
Polyethylene Glycol	25322-68-3	< 0.5	N/A	N/A	N/A	N/E
P(EA/MAA)	25212-88-8	< 0.5	N/A	N/A	N/A	N/A

3. Physical Properties

Appearance / Physical State	Red, viscous compound	Specific Gravity (@25°C)	1.40 - 1.50
Odour	Mild odour	Evaporation Rate	< 1
Odour Threshold	Slightly aromatic odour	Boiling Point (°C)	> 100
Vapour Pressure (mm Hg)	N/A	Freezing Point (°C)	0
Vapour Density (Air = 1)	of Water vapor	pH	8.0 – 9.0
Coefficient of H2O/Oil Distrib	Not determined	VOC contents (g/L)	37.1

4. Fire and Explosion Data

Flammability	No
Means of Extinction	Normal fire fighting procedures should be followed to avoid inhalation of smokes and gases.
Special Fire-fighting Procedures	Firefighters should wear the usual protective gear use self-contained breathing apparatus.
Auto-ignition Temperature (°C)	N/A
Flash Point (°C) / Method	N/A
Upper Flammable Limit (%,Volume)	N/A
Lower Flammable Limit (%,Volume)	N/A
Sensitivity to Mechanical Impact	No
Sensitivity to Static Discharge	No
Hazardous Combustion Products	Carbon Monoxide,Carbon Dioxide, Aliphaitic Hydrocarbons and Hydrocarbon Oxidation products.

MSDS Name: GrabberGard IFC
Revision Date: August 30, 2012

Material Safety Data Sheet

5. Reactivity Data	
Stability	Stable at normal condition
Condition of Reactivity	Contact with incompatible substances
Incompatible Materials	Reacts with mineral acids and alkalis
Hazardous Decomposition Products	Dried films forced to burn will produce: Carbon Monoxide, Carbon Dioxide, and hydrocarbon oxidation products.

6. Toxicological Properties					
Routes of Exposure	√ Skin contact	√ Skin absorption	√ Eye contact	√ Inhalation	√ Ingestion
Effects of Acute Exposure to Product	Skin and eye irritation may occur after contact with the product.				
Effects of Chronic Exposure to Product	None known				
Exposure Limits	None known				
Irritancy of Product	Slight on skin and eyes				
Sensitization of Product	None known				
Carcinogenicity	None known				
Teratogenicity	None known				
Reproductive Toxicity	None known				

7. First Aid Measures	
Eye Contact	Flush with large quantities of water gently for 15 minutes and get medical attention.
Skin Contact	Wash with soap and water.
Inhalation	Remove affected person away from source of exposure to fresh air and get medical attention IMMEDIATELY
Ingestion	Get medical attention IMMEDIATELY.

8. Preventive Measures	
Engineering Controls	Standard industrial ventilation is recommended.
Personal Protective Equipment	Chemical safety glasses and gloves were required during normal use and handling.
Eye Protection (Specify)	Face shield or chemical goggles were recommended.
Skin Protection (Specify)	Chemical resistant nitrile, neoprene or rubber gloves were recommended if contact to the product directly.
Respiratory (Specify)	Respiratory protection is not normally required. Use NIOSH/MSHA approved respirator if condition warrant.
Other	

9. Precautions for Safe Handling and Use	
Handling Procedure and Equipment	N/A
Storage Requirement	Material should be kept in a closed container and stored between 4 – 32°C (40 –90°F)
Spill, Leak or Releases	Wear protective equipment during cleanup.
Waste Disposal	Care should be taken to ensure that the material or it's containers and disposed of in an approved facility, state, provincial and local regulations.
Special Shipping Instructions	DO NOT FREEZE

MSDS Name: GrabberGard IFC
Revision Date: August 30, 2012

Material Safety Data Sheet

10. Regulation Information	
WHMIS	Not controlled
HMIS	Health 1, Flammability 0, Reactivity 0
TDG Regulation	Not classified as a hazardous material.
TSCA	All ingredients of this product are on the inventory list.
DSL	All ingredients of this product are on the list.

11. Preparation Information	
Prepared by:	Chemical Laboratory, Passive Fire Protection Partners
Preparation Date:	11 March 2003
Telephone:	(604) 515-1788
Reason for Revision:	New formulation, rev 002, April 27, 2007 Logo updating, rev 003, June 18, 2007 Spelling mistake on Section of Preventive Measures, rev 004, April 9, 2008 Formulation updating, rev 005, January 16, 2009 Spelling mistake on Section of Precaution for Safe Handling and Use, rev 006, March 1, 2010 Review, rev007, August 30, 2012
Revision Date:	August 30, 2012
Abbreviations Used:	**% (wt.)** = Weight Percentage **CAS Number** = Chemical Abstracts Series Number **DSL** = Domestic Substance List in Canada **H** = Hours **HMIS** = Hazardous Material Identification System **LC50** = Lethal Concentration, 50% **LD50** = Lethal Dose, 50% **MSHA** = Mine Safety and Health Administration **N/A** = Not Applicable or Not Available **N/E** = None Established **NIOSH** = The National Institute for Occupational Safety and Health **STEL** = Short Term Exposure Limit **TDG** = Transportation of Dangerous Goods **TLV** = Threshold Limit Value **TSCA** = Toxic Substance Control Act in US **VOC** = Volatile Organic Compounds **WHMIS** = Workplace Hazardous Material Identification System

This information is provided in good faith and is correct to the best of Grabber Construction Products' knowledge as of the date hereof; however, Grabber makes no representation as to its completeness or accuracy. Customers are encouraged to make their own determination as to the suitability of this product for their purpose prior to use. Grabber disclaims responsibility to damages of any kind resulting from the use of this information. THERE ARE NO WARRANTIES OR REPRESENTATIONS, EXPRESS OR IMPLIED, INCLUDING THOSE OF MERCHANTABILITY OR FITNESS FOR A PARTICULAR PURPOSE WITH RESPECT TO THIS INFORMATION OR TO THE PRODUCT IT DESCRIBES.

Material Safety Data Sheet

1. Product and Company Identification

Product Name: GrabberGard EFC
Product Code: GGEFC5
Supplier: Grabber Construction Products
205 Mason Circle
Concord, CA 94520
Medical Emergency: Passive Fire Protection Partners, 1412 Derwent Way, Delta, BC V3M 6H9, (800) 810-1788
Product Information: 800-877-TURN (Concord, California) 8:00 a.m. - 4:00 p.m. PST

2. Composition/Information on Ingredients

Ingredient	CAS Number	% (wt.)	LC50 (rat)	LD50 (rat)	TLV	STEL
Calcium Carbonate	1317-65-3	< 45	N/A	N/Av	N/A	N/E
Water	7732-18-5	< 35	N/A	N/A	N/E	N/E
Vinyl Acetate Polymers	Not disclosed	<30	N/A	N/A	N/A	N/A
Modified Acrylic Polymer	Proprietary	< 10	N/A	N/A	N/A	N/E
Additives	N/A	< 5	N/A	20–34 g/Kg	50 ppm	N/A
Color Pigment	1309-37-1	< 1	N/A	N/A	N/A	N/A
Ammonia	7664-41-7	< 50 ppm	2000 ppm/4H	N/A	25 ppm	N/A

3. Physical Properties

Appearance / Physical State	Red, viscous compound	Specific Gravity (@25°C)	1.15 - 1.35
Odour	Mild odour	Evaporation Rate	< 1
Odour Threshold	Slightly aromatic odour	Boiling Point (°C)	> 100
Vapour Pressure (mm Hg)	18.51880	Freezing Point (°C)	0
Vapour Density (Air = 1)	of Water vapor	pH	8.0 – 9.0
Coefficient of H2O/Oil Distrib	Not determined	VOC contents (g/L)	81.3

4. Fire and Explosion Data

Flammability	No
Means of Extinction	Normal fire fighting procedures should be followed to avoid inhalation of smokes and gases.
Special Fire-fighting Procedures	Firefighters should wear the usual protective gear use self-contained breathing apparatus.
Auto-ignition Temperature (°C)	N/A
Flash Point (°C) / Method	N/A
Upper Flammable Limit (%,Volume)	N/A
Lower Flammable Limit (%,Volume)	N/A
Sensitivity to Mechanical Impact	No
Sensitivity to Static Discharge	No
Hazardous Combustion Products	Carbon Monoxide,Carbon Dioxide, Aliphaitic Hydrocarbons and Hydrocarbon Oxidation products.

MSDS Name: GrabberGard EFS
Revision Date: August 30, 2012

Material Safety Data Sheet

5. Reactivity Data	
Stability	Stable at normal condition
Condition of Reactivity	Contact with incompatible substances
Incompatible Materials	Reacts with mineral acids and alkalis
Hazardous Decomposition Products	Dried films forced to burn will produce: Carbon Monoxide, Carbon Dioxide, and hydrocarbon oxidation products.

6. Toxicological Properties					
Routes of Exposure	√ Skin contact	√ Skin absorption	√ Eye contact	√ Inhalation	√ Ingestion
Effects of Acute Exposure to Product	Skin and eye irritation may occur after contact with the product.				
Effects of Chronic Exposure to Product	None known				
Exposure Limits	None known				
Irritancy of Product	Slight on skin and eyes				
Sensitization of Product	None known				
Carcinogenicity	None known				
Teratogenicity	None known				
Reproductive Toxicity	None known				

7. First Aid Measures	
Eye Contact	Flush with large quantities of water gently for 15 minutes and get medical attention.
Skin Contact	Wash with soap and water.
Inhalation	Remove affected person away from source of exposure to fresh air and get medical attention IMMEDIATELY
Ingestion	Get medical attention IMMEDIATELY.

8. Preventive Measures	
Engineering Controls	Standard industrial ventilation is recommended.
Personal Protective Equipment	Chemical safety glasses and gloves were required during normal use and handling.
Eye Protection (Specify)	Face shield or chemical goggles were recommended.
Skin Protection (Specify)	Chemical resistant nitrile, neoprene or rubber gloves were recommended if contact to the product directly.
Respiratory (Specify)	Respiratory protection is not normally required. Use NIOSH/MSHA approved respirator if condition warrant.
Other	

9. Precautions for Safe Handling and Use	
Handling Procedure and Equipment	N/A
Storage Requirement	Material should be kept in a closed container and stored between 4 – 32°C (40 –90°F)
Spill, Leak or Releases	Wear protective equipment during cleanup.
Waste Disposal	Care should be taken to ensure that the material or it's containers and disposed of in an approved facility, state, provincial and local regulations.
Special Shipping Instructions	DO NOT FREEZE

MSDS Name: GrabberGard EFS
Revision Date: August 30, 2012

Material Safety Data Sheet

10. Regulation Information	
WHMIS	Not controlled
HMIS	Health 1, Flammability 0, Reactivity 0
TDG Regulation	Not classified as a hazardous material.
TSCA	All ingredients of this product are on the inventory list.
DSL	All ingredients of this product are on the list.

11. Preparation Information	
Prepared by:	Chemical Laboratory, Passive Fire Protection Partners
Preparation Date:	11 March 2003
Telephone:	(604) 515-1788
Reason for Revision:	Color was changed to RED, rev 002,May 24, 2005. New updating, rev 003, April 27, 2007 Logo updating, rev 004, June 18, 2007 Spelling mistake - Preventive Measures, rev 005, April 9, 2008 Formulation updating, rev 006, January 16, 2009 Spelling mistake - Precaution for Safe Handling and Use, rev 007, March 1, 2010 Formulation updating, rev008, January 3, 2011 Review, rev009, August 30, 2012
Revision Date:	August 30, 2012
Abbreviations Used:	**% (wt.)** = Weight Percentage **ACGIH** = American Conference of Governmental Industrial Hygienists **CAS Number** = Chemical Abstracts Series Number **DSL** = Domestic Substance List in Canada **H** = Hours **HMIS** = Hazardous Material Identification System **IARC** = International Agency for Research on Cancer **LC50** = Lethal Concentration, 50% **LD50** = Lethal Dose, 50% **MSHA** = Mine Safety and Health Administration **N/A** = Not Applicable or Not Available **N/E** = None Established **NIOSH** = The National Institute for Occupational Safety and Health **NTP** = National Toxicology Program **OSHA** = The Occupational Safety and Administration **STEL** = Short Term Exposure Limit **TDG** = Transportation of Dangerous Goods **TLV** = Threshold Limit Value **TSCA** = Toxic Substance Control Act in US **VOC** = Volatile Organic Compounds **WHMIS** = Workplace Hazardous Material Identification System

This information is provided in good faith and is correct to the best of Grabber Construction Products' knowledge as of the date hereof; however, Grabber makes no representation as to its completeness or accuracy. Customers are encouraged to make their own determination as to the suitability of this product for their purpose prior to use. Grabber disclaims responsibility to damages of any kind resulting from the use of this information. THERE ARE NO WARRANTIES OR REPRESENTATIONS, EXPRESS OR IMPLIED, INCLUDING THOSE OF MERCHANTABILITY OR FITNESS FOR A PARTICULAR PURPOSE WITH RESPECT TO THIS INFORMATION OR TO THE PRODUCT IT DESCRIBES.

Through-Penetrations Firestop Systems

How to use selection table;
Select penetrating item (Blank, Metallic, Non-metallic, etc.) and then select type of assembly being penetrated:

CFW	–	Concrete Floors & Walls	FF	–	Framed Floors
CF	–	Concrete Floors	HFS	–	Hambro Floor Systems
CMD	–	Concrete Metal Decks	CW	–	Concrete Walls
PCF	–	Precast Concrete Floors	FW	–	Framed Walls

Type of Assembly	System #	GrabberGard Product Used	System Details	Page #
BLANK OPENINGS				
CFW	C-AJ-0103	IFC, EFS	2 hr - 4-1/2 x 40 or 4-1/2 in. diam void	3
CFW	C-AJ-0108	EFC	2 hr - 4-1/2 x 40 or 4-1/2 in. diam void	4
CFW	JWA/PHV 120-05	IFC, EFC, EFS	2 hr - 8 in. diameter max opening.	171

Type of Assembly	System #	GrabberGard Product Used	System Details	Page #
METALLIC PENETRATIONS				
CFW	C-AJ-1494	IFC, EFS	3 hr - steel, conduit, iron, copper pipes	5
CFW	C-AJ-1495	IFC, EFS	3 hr - steel, conduit, iron, copper pipe w/ metal sleeve	6
CFW	C-AJ-1499	EFC	3 hr - steel, conduit, iron, copper pipes	7
CFW	C-AJ-1500	EFC	3 hr - steel, conduit, iron, copper pipe w/ metal sleeve	8
CFW	C-AJ-1596	EFC, IFC, EFS	2 hr - steel, conduit, iron, copper pipes w/ sleeve	9
CFW	JWA/PHV 120-06	EFC, IFC, EFS	1 & 2 hr - emt/steel conduit, copper pipe & tube	176
CFW	JWA/PHV 120-08	EFC, IFC	2 hr - steel or cast iron pipe, T rating	181
CFW	JWA/PHV 120-09	EFC, IFC, EFS	2 hr - steel, conduit, iron, copper pipes	183
CFW	JWA/PHV 120-10	EFC, IFC	2 hr - conduit or copper pipe, T rating	185
CFW	JWA/PHV 120-12	EFC, IFC	2 hr - steel, conduit, iron, copper pipes	188
CF	JWA/PH 120-01	EFC, IFC	2 hr - steel or cast iron pipe, w/ wc, T rating	158
CMD	F-A-1058	IFC	2 hr - steel, conduit, iron, copper pipes	30
CMD	F-A-1060	EFC	2 hr - steel, conduit, iron, copper pipes	31
CMD	JWA/PH 120-04	EFC, IFC	2 hr - steel and cast iron pipe	162
FF	F-C-1119	IFC	1 hr - steel, iron, conduit, copper pipes	38
FF	F-C-1122	EFC	1 hr - steel, iron, conduit, copper pipes	39
FF	JWA/PHV 120-12	EFC, IFC	1 & 2 hr - steel, conduit, iron, copper pipes	188
CW	W-J-1153	IFC	1, 2, 3 & 4 hr - steel, iron, conduit, copper pipes	44
CW	W-J-1157	EFC	1, 2, 3 & 4 hr - steel, iron, conduit, copper pipes	45
FW	W-L-1338	IFC	1, 2, 3 & 4 hr - steel, iron, conduit, copper pipes	58
FW	W-L-1342	EFC	1, 2, 3 & 4 hr - steel, iron, conduit, copper pipes	59
FW	W-L-1449	IFC, EFC	1 & 2 hr - steel, iron, conduit, copper pipes w/ metal sleeve	60
FW	W-L-1475	IFC, EFC	2 hr - steel, iron, conduit, copper pipes w/ metal sleeve	62

Firestopping Selection Table

Type of Assembly	System #	GrabberGard Product Used	System Details	Page #
METALLIC PENETRATIONS				
FW	JWA/PHV 120-12	EFC,IFC	1 & 2 hr- steel, conduit, iron, copper pipes	182
FW	JWA/PHV 120-12	EFC, IFC, EFS	1 & 2 hr - multiple emt/steel conduit, copper pipe & tube	172
FW	JWA/PHV 120-06	EFC, IFC, EFS	1 & 2 hr - multiple emt/steel conduit, copper pipe & tube	179
FW	JWA/PV 60-03	EFC, IFC	1 hr - multiple cast iron, steel copper pipes.	199

Type of Assembly	System #	GrabberGard Product Used	System Details	Page #
NON-METALLIC PENETRATIONS				
CFW	C-AJ-2465	IFC	2 hr - cpvc	10
CFW	C-AJ-2470	EFC	2 hr - cpvc	11
CFW	C-AJ-2571	GPC	2 hr - pvc, rnc, cpvc, abs	12
CFW	C-AJ-2619	EFC, IFC w/ PPC	2 & 3 hr - pvc, abs, frpp, cpvc	14
CFW	C-AJ-2620	IFC	2 hr - glass pipe	16
CFW	JWA/PHV 120-01	IFC	2 hr - pvc, ccpvc, cpvc	171
CFW	JWA/PHV 120-02	IFC	2 hr - pvc, ccpvc, cpvc	172
CFW	JWA/PHV 120-13	EFC, IFC w/ PPC	2 hr - pvc, ccpvc, cpvc, abs, frpp	190
CFW	JWA/PHV 120-14	EFC, IFC w/ PPC	2 hr - pvc, cpvc	191
CFW	JWA/PHV 120-15	EFC, IFC w/ WS1	1 & 2 hr - pvc, ccpvc, cpvc, abs, frpp	192
CFW	JWA/PHV 120-16	EFC, IFC w/ WS1	1 & 2 hr - pex, pvc, ccpvc, cpvc, abs, frpp	194
CFW	JWA/PHV 120-17	EFC, IFC w/ PPC	2 hr - pvc, ccpvc	196
CFW	JWA/PHV 120-18	EFC, IFC w/ PPC	1 & 2 hr - pvc, ccpvc, xfr	197
CFW	JWA/PHV 120-19	EFC, IFC w/ PPC	1 & 2 hr - pvc, cpvc	198
CF	F-A-2121	IFC	2 hr - abs, pvc, w/ wc	32
CF	F-A-2126	EFC	2 hr - abs, pvc, w/ wc	33
CF	JWA/PH 120-07	EFC, IFC w/ WS1	2 hr - pvc, ccpvc	165
CF	JWA/PH 120-09	EFC, IFC w/ PPC	1 & 2 hr - pvc, cpvc	168
CMD	JWA/PH 120-06	EFC, IFC w/ PPC	1 & 2 hr - pvc, ccpvc, cpvc, ccabs, abs, frpp	164
CMD	JWA/PH 180-01	IFC w/ WS1	3 hr - pvc, ccpvc, cpvc	169
CMD	JWA/PHV 120-15	EFC, IFC w/ WS1	1 & 2 hr - pvc, ccpvc, cpvc, abs, frpp	192
CMD	JWA/PHV 120-16	EFC, IFC w/ WS1	1 & 2 hr - pex, pvc, ccpvc, cpvc, abs, frpp	194
PCF	JWA/PH 120-08	EFC, IFC	2 hr - abs, pvc, ccpvc	166
PCF	JWA/PHV 120-01	IFC	2 hr - pvc, ccpvc, cpvc	171
PCF	JWA/PHV 120-02	IFC	2 hr - pvc, ccpvc, cpvc	172
PCF	JWA/PHV 120-15	EFC, IFC w/ WS1	1 & 2 hr - pvc, ccpvc, cpvc, abs, frpp	192
FF	F-C-2283	IFC	1 hr - cpvc, pvc and rnc	40
FF	F-C-2287	EFC	1 hr - cpvc, pvc and rnc	41
FF	JWA/PH 60-01	EFC, IFC	1 hr - pvc,rnc, pex, pe/al/pe,.pex/al/pex	149
FF	JWA/PH 60-02	EFC, IFC	1 hr – pe/alpe, pex/alpex	151
FF	JWA/PH 60-03	EFC, IFC w/ PPC	1 hr - pvc, ccpvc, abs, ccabs.	152
FF	JWA/PH 60-04	EFC, IFC w/ WS1	1 hr - abs, pvc, cpvc; w/ tees, couplings w/ rated or non-rated chase wall	153
FF	JWA/PH 60-05	EFC, IFC w/ PPC	1 hr - abs, pvc, cpvc.	155
FF	JWA/PH 60-06	EFC, IFC w/ WS1	1 hr - abs, pvc w/ rated or non-rated chase wall.	156

Firestopping Selection Table

Type of Assembly	System #	GrabberGard Product Used	System Details	Page #
NON-METALLIC PENETRATIONS				
FF	JWA/PH 120-05	EFC, IFC w/ PPC	1 & 2 hr - pvc, ccpvc, cpvc, ccabs, abs, frpp	163
CW	W-J-2149	IFC	1, 2, 3 & 4 hr - cpvc, pvc, pex	46
CW	W-J-2153	EFC	1, 2, 3 & 4 hr - cpvc, pvc, pex	47
FW	W-L-2384	IFC	1, 2, 3 & 4 hr - cpvc, cpvc, pex	63
FW	W-L-2387	EFC	1, 2, 3 & 4 hr - cpvc, cpvc, pex	64
FW	W-L-2475	GPC	1 & 2 hr - pvc, cpvc, abs, rnd, frpp	65
FW	W-L-2540	IFC	1 & 2 hr - glass pipe	67
FW	JWA/PV 60-01	IFC	1 hr - pvc, cpvc, pex	201
FW	JWA/PV 60-04	EFC, IFC w/ WS1	1 hr - abs, pvc, cpvc, rnc	204
FW	JWA/PV 120-03	IFC	1 & 2 hr - pvc, cpvc, pex	210
FW	JWA/PV 120-06	EFC, IFC	1 & 2 hr - multiple flexible ent.	214
FW	JWA/PV 120-07	EFC, IFC w/ PPC	1 & 2 hr - pvc, ccpvc, cpvc, ccabs, abs, frpp	215
FW	JWA/PV 120-08	EFC, IFC w/ PPC	1 & 2 hr - pvc, ccpvc, cpvc, ccabs, abs, xfr	216
FW	JWA/PV 240-02	EFC, IFC w/ WS1	4 hr - pvc, cpvc	219

Type of Assembly	System #	GrabberGard Product Used	System Details	Page #
CABLES & ELECTRICAL BOXES				
CFW	C-AJ-3230	IFC	3 hr - multiple cables	17
CFW	C-AJ-3233	EFC	3 hr - multiple cables	18
CFW	C-AJ-3302	EFC, IFC	3 hr - multiple cables w/ metal sleeve	19
CFW	JWA/PHV 120-06	EFC, IFC, EFS	1 & 2 hr - emt/steel conduit, multiple cables	176
CFW	JWA/PHV 120-09	EFC, IFC, EFS	2 hr - multiple bx/teck, loomex/romex cables	183
CFW	JWA/PHV 120-12	EFC, IFC	1 & 2 hr - emt/steel conduit, multiple loomex, bx, cables	188
FF	F-C-3079	IFC	1 & 2 hr - single cable	42
FF	F-C-3080	EFC	1 & 2 hr - single cable	43
CW	W-J-3121	IFC	1 & 2 hr - multiple cables	48
CW	W-J-3123	EFC	1 & 2 hr - multiple cables	49
CW	JWA/PHV 120-09	EFC, IFC, EFS	2 hr - multiple bx/teck, loomex/romex cables	183
CW	JWA/PHV 120-12	EFC, IFC	1 & 2 hr - emt/steel conduit, multiple loomex, bx, cables	188
FW	W-L-3245	IFC	1 & 2 hr - multiple cables	68
FW	W-L-3247	EFC	1 & 2 hr - multiple cables	69
FW	W-L-3348	EFC, IFC	1 & 2 hr - multiple cables w/ metal sleeve	70
FW	JWA/PHV 120-06	EFC, IFC, EFS	1 & 2 hr - emt/steel conduit, multiple cables	176
FW	JWA/PHV 120-09	EFC, IFC, EFS	1 & 2 hr - multiple bx/teck, loomex/romex cables	183
FW	JWA/PHV 120-12	EFC, IFC	1 & 2 hr - emt/steel conduit, multiple loomex, bx, cables	188
FW	JWA/PV 60-05	EFC, IFC w/ MP1	1 hr - metallic outlet box	206

Firestopping Selection Table

Type of Assembly	System #	GrabberGard Product Used	System Details	Page #
CABLES TRAYS				
CFW	JWA/PHV 120-06	EFC, IFC, EFS	1 & 2 hr - max 24 x 6 in. steel or alum cable tray	176
CW	W-J-4046	IFC, EFS	1 & 2 hr - 24 x 6 in. alum or steel cable tray	50
CW	W-J-4047	EFC	1 & 2 hr - 24 x 6 in. alum or steel cable tray	52
FW	W-L-4046	IFC, EFS	1 & 2 hr - 24 x 6 in. alum or steel cable tray	72
FW	W-L-4047	EFC	1 & 2 hr - 24 x 6 in. alum or steel cable tray	74
FW	JWA/PHV 120-06	EFC, IFC, EFS	1 & 2 hr - max 24 x 6 in. steel or alum cable tray	172

Type of Assembly	System #	GrabberGard Product Used	System Details	Page #
INSULATED PIPES				
CFW	C-AJ-5261	IFC	2 hr - ab/pvc insulated metal pipes	21
CFW	C-AJ-5262	IFC	2 hr - fg insulated metal pipes	22
CFW	C-AJ-5266	EFC	2 hr - fg insulated metal pipes	23
CFW	C-AJ-5267	EFC	2 hr - ab/pvc insulated metal pipes	24
CFW	C-AJ-5326	IFC	2 hr- fg insulated metal pipes w/ sleeve	25
CFW	JWA/PHV 120-11	EFS	2 hr - fg insulation metal pipes.	187
CF	JWA/PH 120-02	EFC, IFC	2 hr - koolphen insulated steel, iron w/ sleeve	159
CMD	JWA/PH 120-02	EFC, IFC	2 hr - koolphen insulated steel, iron w/ sleeve	159
FW	W-L-5217	IFC	1 & 2 hr - ab/pvc insulated metal pipes	76
FW	W-L-5218	IFC	1, 2, 3 & 4 hr - fg insulated metal pipes	78
FW	W-L-5219	EFC	1 & 2 hr - ab/pvc insulated metal pipes	79
FW	JWA/PV 120-01	IFC	2 hr - koolphen insulated steel, iron	208

Type of Assembly	System #	GrabberGard Product Used	System Details	Page #
METALLIC DUCTS				
CF	F-A-7013	IFC	2 hr - 24 in. x 24 in. duct	34
CMD	F-A-7014	IFC	2 hr - 16 in. diam duct	35
CF	F-A-7015	EFC	2 hr - 24 in. x 24 in. duct	36
CMD	F-A-7016	EFC	2 hr - 16 in. diam duct	37
CW	W-J-7064	IFC	1 & 2 hr - 26 x 30 in.; min 24 ga. rectangular duct	54
CW	W-J-7065	IFC	1 & 2 hr - 16 in. min 22 ga round duct	55
CW	W-J-7066	EFC	1 & 2 hr - 26 x 30 in.; min 24 ga. rectangular duct	56
CW	W-J-7067	EFC	1 & 2 hr - 16 in. min 22 ga round duct	57
FW	W-L-7107	IFC	1 & 2 hr - 26 x 30 in. min 24 ga rectangular duct	81
FW	W-L-7108	IFC	1 & 2 hr - 16 in. min 26 ga round duct	82
FW	W-L-7109	EFC	1 & 2 hr - 26 x 30 in. min 24 ga rectangular duct	83
FW	W-L-7110	EFC	1 & 2 hr - 16 in. min 26 ga round duct	84
FW	JWA/PV 120-02	EFC, IFC	1 & 2 hr - 24 in. x 24 in. 16 ga. rectangular duct w/ fg insulation	209
FW	JWA/PV 120-02	EFC, IFC	1 & 2 hr - max 16 in. min 24ga round duct w/ fg insulation.	209

Firestopping Selection Table

Type of Assembly	System #	GrabberGard Product Used	System Details	Page #
MULTIPLE PENETRATIONS				
CFW	C-AJ-8142	IFC	2 hr - Multiple elec cables & metal pipes	26
CFW	C-AJ-8145	EFC	2 hr - Multiple elec cables & metal pipes	28
FW	JWA/PV 60-03	EFC, IFC	1 hr - gyp wall multiple up to 3 in. cast iron, steel copper pipes.	203
FW	JWA/PHV 120-06	EFC, IFC, EFS	1 & 2 hr - multiple emt/steel conduit, copper pipe & tube	176
FW	JWA/PHV 120-09	EFC, IFC, EFS	1 & 2 hr - multiple steel, conduit, iron, copper pipes	183
FW	JWA/PHV 120-12	EFC, IFC	1 & 2 hr - emt/steel conduit, multiple loomex, bx, cables	188
FW	JWA/PV 240-02	EFC, IFC w/ WS1	4 hr - pvc, cpvc, emt, copper pipes, multiple cables	219

Firestopping Selection Table

Joint Systems

Type of assembly joint system:

BW – Bottom of Wall
FF – Floor to Floor
FW – Floor to Wall
HW – Head of Wall
PJ – Perimeter Joint - Curtain Wall
WW – Wall to Wall

Type of Assembly	System #	GrabberGard Product Used	System Details	Page #
BW	BW-S-0009	IFC	1 & 2 hr - bottom of gyp wall to conc floor joint	87
BW	BW-S-0010	EFC	1 & 2 hr - bottom of gyp wall to conc floor joint	88
FF	FF-D-0047	IFC	2 hr - floor to floor joint - 1 in. joint	98
FF	FF-D-0048	EFC	2 hr - floor to floor joint - 1 in. joint	99
FF	FF-D-1059	EFS	2 hr - floor to floor joint - 4 in. joint	100
FF	JWA/PHV 120-20	EFC, IFC, EFS	1 & 2 hr - floor to floor joint - 12 in. joint	199
FW	FW-D-0038	IFC	2 hr - floor to wall - 1in. joint	101
FW	FW-D-0039	EFC	2 hr - floor to wall - 1in. joint	102
FW	FW-D-1055	EFS	2 hr - floor to wall - 4 in. joint	103
FW	JWA/PHV 120-04	EFC, IFC, EFS	1 & 2 hr - framed floor to framed floor/ceiling	174
FW	JWA/PHV 120-07	EFC, IFC	2 hr - wall to stair joint - 2 in. joint	179
FW	JWA/PHV 120-20	EFC, IFC, EFS	1 & 2 hr - floor to wall joint - 12 in. joint	199
HW	HW-D-0353	IFC	1 & 2 hr - gyp wall to metal deck - 3/4 in. joint	104
HW	HW-D-0354	EFS	2 hr - concrete wall to metal deck - 3/4 in. joint	106
HW	HW-D-0355	IFC	2 hr - concrete wall to concrete floor - 3/4 in. joint	107
HW	HW-D-0356	IFC	1 & 2 hr - gyp wall to concrete floor - 3/4 in. joint	108
HW	HW-D-0357	EFS	1,2,3&4 hr - gyp wall to metal deck - 3/4 in. joint	110
HW	HW-D-0358	EFS	1 & 2 hr - gyp wall to metal deck w/ open web truss and w/ mk-6 - 3/4 in. joint	113
HW	HW-D-0359	EFS	1 & 2 hr - concrete wall to metal deck w/ open web truss and w/ mk-6-1 in. joint	116
HW	HW-D-0368	EFC	1 & 2 hr - gyp wall to metal deck - 3/4 in. joint	118
HW	HW-D-0369	EFC	2 hr - concrete wall to concrete floor - 3/4 in. joint	120
HW	HW-D-0370	EFC	1 & 2 hr - gyp wall to concrete floor - 3/4 in. joint	121
HW	HW-D-0404	EFS	1 & 2 hr - gyp wall to concrete floor - 1 in. joint	123
HW	HW-D-0531	EFS	1 & 2 hr - gyp wall to metal deck - 3/4 in. joint	125
HW	HW-D-0532	EFS	2 hr - gyp wall to concrete floor - 1 in. joint	127
HW	HW-D-0547	EFS	1 & 2 hr - gyp wall to concrete floor - wall parallel to beam 1 in. joint	129
HW	HW-D-0566	EFS	2 hr - concrete wall to metal deck - 2 in. joint	132
HW	HW-D-0567	EFS	2 hr - concrete wall to metal deck - wall parallel to flutes 2 in. joint	134
HW	HW-D-0568	EFS	2 hr - concrete wall to metal deck - wall parallel to beam 1 in. joint	136
HW	HW-D-0692	EFC, IFC	2 hr - shaft wall to concrete floor - 1 in. joint	139

Firestopping Selection Table

Type of Assembly	System #	GrabberGard Product Used	System Details	Page #
HW	HW-D-0694	EFS	2 hr - shaft wall to concrete floor - 1 in. joint	141
HW	HW-D-1050	EFS	2 hr - concrete wall to concrete floor - 4 in. joint	143
HW	JWA/PHV 60-01	EFS	1 hr - gyp wall parallel to metal deck - 3/4 in. joint	170
HW	JWA/PHV 120-03	EFC, IFC, EFS	1 & 2 hr - gyp wall to metal deck w/ open web truss and w/ mk-6 - 3/4 in. joint.	173
HW	JWA/PHV 120-20	EFC, IFC, EFS	1 & 2 hr - concrete floor to concrete wall joint - 12 in. joint	199
HW	JWA/PV 60-02	EFC, IFC	1 hr - gyp wall parallel to metal deck w/ mk6 - 3/4 in. joint	202
HW	JWA/PV 120-04	EFS	1 & 2 hr - gyp wall to fluted conc/metal deck, cafco 300	211
HW	JWA/PV 120-05	EFC, IFC, EFS	1 & 2 hr - gyp wall to fluted conc/metal deck, running parallel or perpendicular - 1 in. joint	212
HW	JWA/PV 240-01	EFS	4-hr - concrete wall to concrete floor - 2 in. joint	218
PJ	CW-D-1006	EFS	2 hr - curtain wall joint, spandrel exterior panels and vision glass exterior - 4 in. joint	89
PJ	CW-S-1011	EFS	2 hr - curtain wall joint, gyp board and vision glass exterior - 2-1/2 in. joint	93
PJ	CW-S-2054	EFS	2 hr - curtain wall joint, spandrel glass exterior - 8in. joint	95
PJ	JWA/JS 120-01	EFS	2 hr - steel panel curtain wall, steel stud framing, insulation optional - 8 in. joint	223
PJ	JWA/JS 120-02	EFS	2 hr - steel panel curtain wall, steel stud framing, w/ insulation - 8 in. joint	225
PJ	JWA/JS 120-03	EFS	2 hr - steel panel curtain wall, steel stud framing, insulation optional - 8 in. joint	228
PJ	JWA/JS 120-04	EFS	2 hr - steel panel curtain wall, steel stud framing, w/ insulation - 8 in. joint	230
PJ	JWA/JS 120-05	EFS	2 hr - curtain wall joint, spandrel glass exterior - 8in. joint	233
PJ	JWA/JS 120-06	EFS	2 hr - concrete floor to concrete tilt-up panels - 8 in. joint	236
PJ	JWA/JS 120-07	EFS	2 hr - concrete floor to concrete panel curtain wall; steel studs; mw insulation optional - 8 in. joint	238
PJ	JWA/JS 120-08	EFS	2 hr - concrete floor to concrete panel curtain wall; aluminum tubing; mw insulation optional - 8 in. joint	241
PJ	JWA/JS 120-09	EFS	2 hr - concrete floor to steel panel curtain wall; rect. aluminum tube mullions with mw insulation - 8 in. joint	244
PJ	JWA/JS 120-10	EFS	2 hr - concrete floor to aluminum panel curtain wall; rect. aluminum tube mullions with mw insulation - 8 in. joint	247
PJ	JWA/JS 120-11	EFS	2 hr - concrete floor to glass panel curtain wall; steel studs with mw insulation - 8 in. joint	250
PJ	JWA/JS 120-12	EFS	2 hr - concrete floor to aluminum panel curtain wall; steel studs with mw insulation - 8 in. joint	253
PJ	JWA/JS 120-13	EFS	2 hr - concrete floor to glass panel curtain wall; steel studs with mw insulation - 8 in. joint	256
PJ	JWA/JS 120-14	EFS	2 hr - concrete floor to aluminum panel curtain wall; steel studs with mw insulation - 8 in. joint	259
PJ	JWA/JS 120-15	EFS	2 hr - concrete floor to concrete tilt-up panels with brick exterior - 8 in. joint	262
PJ	JWA/JS 120-16	EFS	2 hr - concrete floor to concrete tilt-up panels with stone exterior - 8 in. joint	264
PJ	JWA/JS 120-17	EFS	2 hr - concrete floor to EIFS exterior - 8 in. joint	266
PJ	JWA/JS 120-18	EFS	2 hr - concrete floor to EIFS exterior - 8 in. joint	269
PJ	JWA/JS 120-19	EFS	2 hr - concrete floor to EIFS & stone exterior - 8 in. joint	272
PJ	JWA/JS 120-20	EFS	2 hr - concrete floor to EIFS & brick exterior - 8 in. joint	275
PJ	JWA/JS 120-21	EFS	2 hr - concrete floor to EIFS exterior - 8 in. joint	278
WW	WW-D-0078	EFC, IFC	2 hr - concrete wall to concrete wall -3/4in. joint	140
WW	WW-S-0054	EFC, IFC	2 hr - concrete wall to gypsum wall -3/4 in. joint	141

Understanding a Underwriters Laboratories (UL) Through-Penetration Firestop Listing (XHEZ).

UL uses an Alpha-alphanumeric identification system can be used to help identify the correct firestop system to select.

The Alpha component is used to identify the assembly type being penetrated, as the Numerical component is used to identify the penetration type.

First Alpha Component

C	=	signifies either a floor or wall is being penetrated
F	=	signifies a floor is being penetrated
W	=	signifies a wall is being penetrated and

Second Alpha Component – Construction type of the floor or wall

A	=	Concrete floors less than or equal to 5 inch thick
B	=	Concrete floors greater than 5 inch thick
C	=	Framed floors
D	=	Steel decks in marine vessels
E	=	Concrete floor-ceiling assembly with membrane protection
F-I	=	Reserved for future use
J	=	Concrete or masonry walls less than or equal to 8 inch thick
K	=	Concrete or masonry walls greater than 8 inch thick
L	=	Framed walls
M	=	Bulkheads in marine vessels
N	=	Composite panel walls
O-Z	=	Reserved for future use

Numerical Component – Identifies the penetrating item

0000-0999	=	No Penetrant
1000-1999	=	Metallic pipe, conduit or tubing
2000-2999	=	Nonmetallic pipe, conduit or tubing
3000-3999	=	Electrical cables
4000-4999	=	Cable trays with electrical cables
5000-5999	=	Insulated pipes
6000-6999	=	Busways
7000-7999	=	HVAC ducts
8000-8999	=	Mixed multiple penetrations
9000-9999	=	Reserved for future use

FL0712

System No. C-AJ-0103

F Rating – 2 Hr
T Rating – 2 Hr

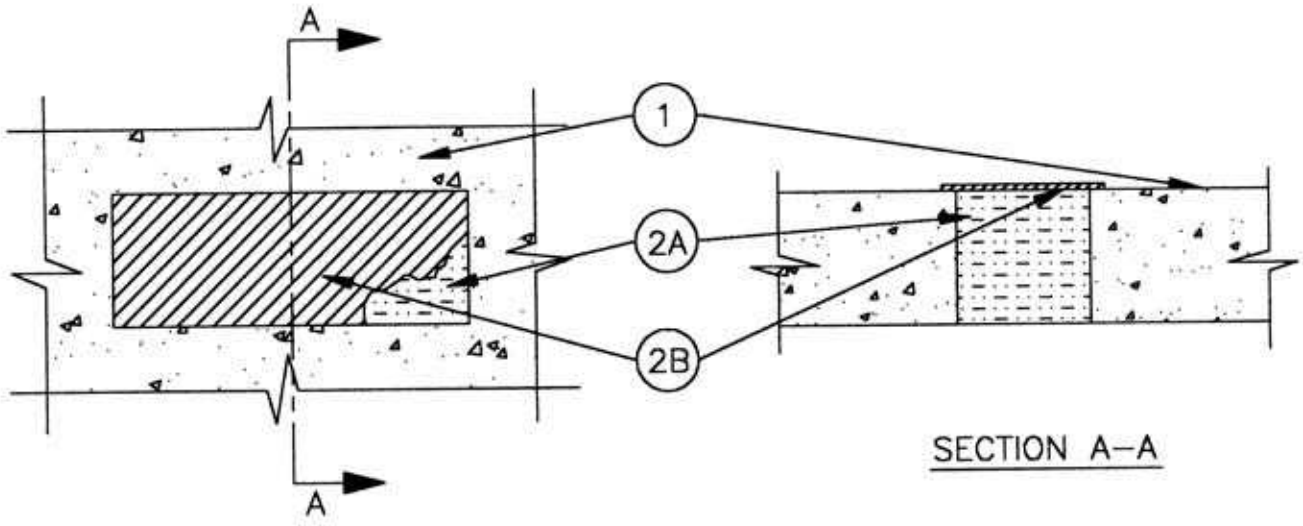

1. **Floor or Wall Assembly** – Min 4-1/2 in. thick reinforced lightweight or normal weight (100-150 pcf) structural concrete. Min 5 in. thick reinforced lightweight or normal weight (100-150 pcf) structural concreter wall. Wall may also be constructed of any UL Classified Concrete Blocks*. Max size of opening to be 4-1/2 by 40 in. or 4-1/2 in diam.

   See **Concrete Blocks** (CAZT) category in the Fire Resistance Directory for names of manufactures.

2. **Firestop System** – The firestop system shall consist of the following:

   a) **Packing Material** – Min 4 in. or 4-1/2 in. thickness of min 4 pcf mineral wool batt insulation for sealants B1 and B2, respectively, compressed 25 percent into opening as a permanent form. Packing material to be recessed from top surface of floor or both surfaces of wall assembly to accommodate the required thickness of fill material (Item 2B1).

   b) **Fill, Void or Cavity Material* – Sealant** – Min 1/2 in. thickness of fill material applied within the opening, flush with top surface of floor or both surfaces of wall assembly.

   GRABBER CONSTRUCTION PRODUCTS INC – GrabberGard IFC

   c) **Fill, Void or Cavity Material* – Sealant** – As an alternate to the above, min 1/16 in. dry thickness of fill material sprayed or brushed on top surface to completely cover mineral wool and overlap a min 1/2 in. onto concrete floor.

   GRABBER CONSTRUCTION PRODUCTS INC – GrabberGard EFS

***Bearing the UL Classification Marking**

System No. C-AJ-0108

F Rating – 2 Hr

T Rating – 2 Hr

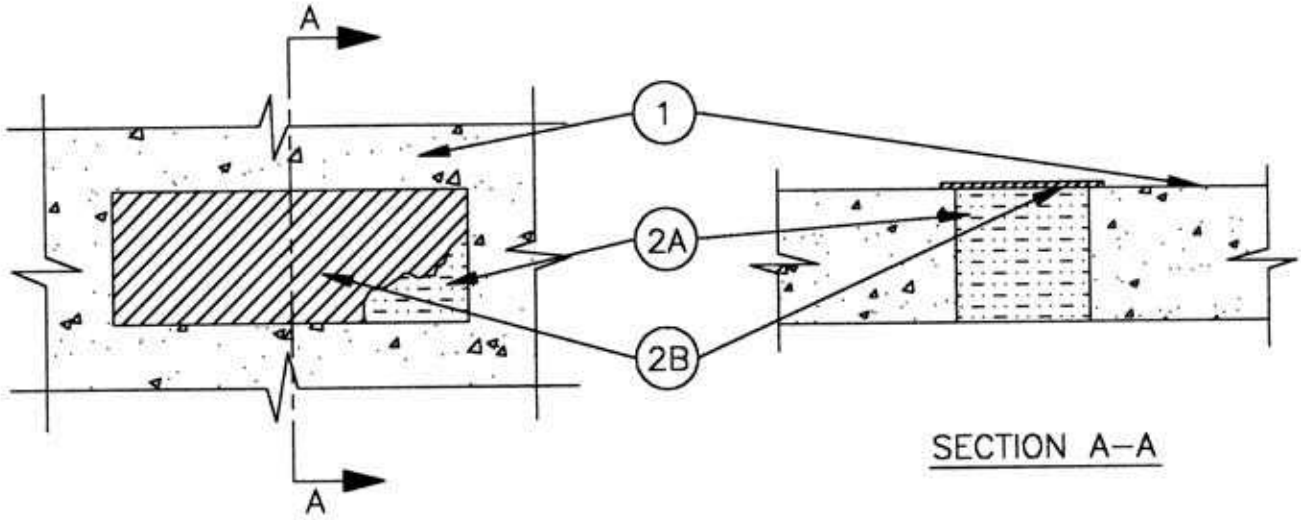

1. **Floor or Wall Assembly** – Min 4-1/2 in. thick reinforced lightweight or normal weight (100-150 pcf) structural concrete. Min 5 in. thick reinforced Wall may also be constructed of any UL Classified Concrete Blocks*. Max size of opening to be 4-1/2 by 40 in. or 4-1/2 in diam.

   See **Concrete Blocks** (CAZT) category in the Fire Resistance Directory for names of manufactures.

2. **Firestop System** – The firestop system shall consist of the following:

   a) Packing Material – Min 4 in. thickness of min 4 pcf mineral wool batt insulation compressed 25 percent into opening as a permanent form. Packing material to be recessed from top surface of floor or both surfaces of wall assembly to accommodate the required thickness of fill material (Item 2B).

   b1)Fill, Void or Cavity Material* – Sealant – Min 1/2 in. thickness of fill material applied within the opening, flush with top surface of floor or surfaces of wall assembly.

   GRABBER CONSTRUCTION PRODUCTS INC – GrabberGard EFC

***Bearing the UL Classification Marking**

System No. C-AJ-1494

L Rating at Ambient – Less than 1 CFM/ sq. ft.
L Rating at 400°F – Less than 1 CFM/sq. ft.
F Rating – 3 Hr
T Rating – 1/4 Hr

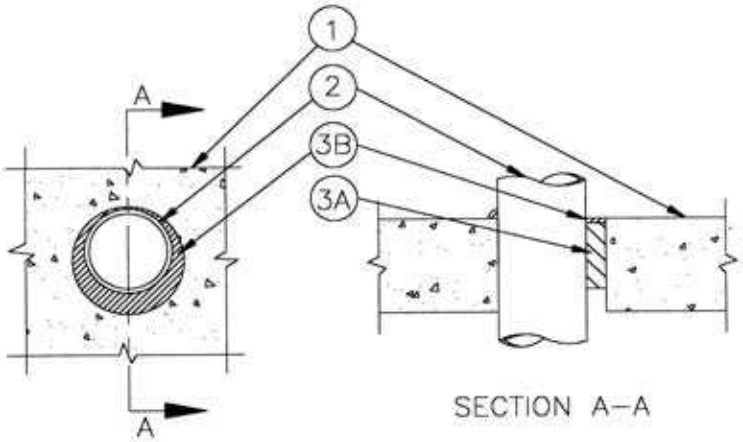

1. **Floor or Wall Assembly** – Min 4-1/2 in. thick lightweight or normal weight (100-150 pcf) concrete. Wall may also be constructed of any UL Classified Concrete Block. Max diam of opening is 25-1/4 in.
   See **Concrete Blocks** (CAZT) category in the Fire Resistance Directory for names of manufacturers.

2. **Through Penetrants** – One metallic pipe, conduit or tubing to be installed either concentrically or eccentrically within the firestop system. The annular space between pipe, conduit or tubing and edge of through opening shall be min 0 in. (point contact) to max 2-1/8 in. Pipe, conduit or tubing to be rigidly supported on both sides of floor or wall assembly. The following types and sizes of metallic pipes, conduits or tubing may be used:
   - **a) Steel Pipe** – Nom 24 in. diam (or smaller) Schedule 10 (or heavier) steel pipe.
   - **b) Conduit** – Nom 6 in. diam (or smaller) rigid steel conduit.
   - **c) Conduit** – Nom 4 in. diam (or smaller) steel electrical metallic tubing.
   - **b) Iron Pipe** – Nom 24 in. diam (or smaller) cast or ductile iron pipe.
   - **d) Copper Tubing** – Nom 6 in. diam (or smaller) Type L (or heavier) copper tube.
   - **e) Copper Pipe** – Nom 6 in. diam (or smaller) Regular (or heavier) copper pipe.
   - **f) Firestop System** – The firestop system shall consist of the following:

3. **Packing Material** – Min 4 in. or 4-1/2 in. thickness of 4 pcf mineral wool batt insulation for sealants B1 and B2, respectively, firmly packed into opening as a permanent form. Packing material to be recessed from top surface of floor or from both surfaces of wall to accommodate the required thickness of fill material (Item 3B).
   - **a) Fill Void or Cavity Material*** – Sealant – Min 1/2 in. thickness of fill material applied within annulus, flush with top surface of floor or both surfaces of wall. At point contact location between penetrant and periphery of opening a min 1/2 in. diam bead of fill material shall be applied at the periphery of opening/penetrant interface on top surface of floor assembly or both surfaces of wall.

     GRABBER CONSTRUCTION PRODUCTS INC – GrabberGard IFC

   - **b2) Fill Void or Cavity Material*** – Sealant – Min 1/16 in. thickness of fill material applied to completely cover the mineral wool insulation and to overlap the floor or wall surfaces 1/2 in., flush with top surface of floor or both surface of wall.

     GRABBER CONSTRUCTION PRODUCTS INC – GrabberGard EFS

***Bearing the UL Classification Marking**

System No. C-AJ-1495

L Rating at Ambient – Less than 1 CFM/ sq. ft.
L Rating at 400°F – Less than 1 CFM/sq. ft.
F Rating – 3 Hr
T Rating – 1/4 Hr

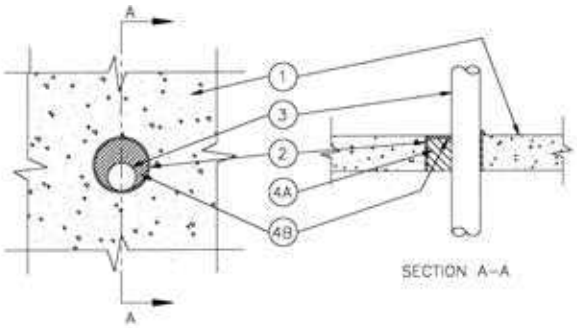

1. **Floor or Wall Assembly** – Min 4-1/2 in. thick lightweight or normal weight concrete (100-150 pcf). Wall may also be constructed of any UL Classified Concrete Blocks*. Max diam of opening is 8 in.
   See **Concrete Blocks** (CAZT) category in the Fire Resistance Directory for names of manufacturers.

2. **Metallic Sleeve** – (Optional) – Sleeve to be cast or grouted into floor or wall assembly, flush with floor or both wall assembly. The following metallic sleeves may be used within the firestop system:
   a) Nom 8 in. diam (or smaller) Schedule 40 (or heavier) steel sleeve.
   b) Nom 4 in. diam (or smaller) steel electrical metallic tubing (EMT) sleeve.

3. **Through Penetrants** – One metallic pipe, conduit or tubing to be installed either concentrically or eccentrically within the firestop system. The annular space between pipe, conduit or tubing and sleeve or periphery of opening shall be min 0 in. (point contact) to max 3-1/2 in. Pipe, conduit or tubing to be rigidly supported on both sides of floor or wall assembly. The following types and sizes of metallic pipes, conduits or tubing may be used:
   a) Steel Pipe – Nom 4 in. diam (or smaller) Schedule 40 (or heavier) steel pipe.
   b) Iron Pipe – Nom 4 in. diam (or smaller) cast or ductile iron pipe.
   c) Conduit – Nom 4 in. diam (or smaller) steel electrical metallic tubing or rigid steel conduit.
   d) Copper Tubing – Nom 3 in. diam (or smaller) Type L (or heavier) copper tube.
   e) Copper Pipe – Nom 3 in. diam (or smaller) Regular (or heavier) copper pipe.

4. **Firestop System** – The firestop system shall consist of the following:
   a) Packing Material – Min 4 in. or 4-1/4 in. thickness of min 4 pcf density mineral wool batt insulation for sealants B1 and B2, respectively, firmly packed into opening as a permanent form. Packing material to be recessed from top surface of floor or from both surfaces of wall as required to accommodate the required thickness of fill material (Item 4B).
   b1)Fill Void or Cavity Material* – Sealant – Min 1/2 in. thickness of fill material applied within annulus, flush with top surface of floor or both surfaces of wall. At point contact location between penetrant and sleeve or concrete, a 1/2 in. diam bead of fill material shall be applied at the sleeve or concrete/penetrant interface on the top surface of floor or both surfaces of wall.

   GRABBER CONSTRUCTION PRODUCTS INC – GrabberGard IFC

   b2)Fill Void or Cavity Material* – Sealant – Min 1/4 in. thickness of fill material applied within annulus, flush with top surface of floor or min 1/8 in. thickness of fill material applied within annulus, flush with both surfaces of wall. At point contact location between penetrant and sleeve or concrete, a min 1/4 in. diam bead of fill material shall be applied at the sleeve or concrete/penetrant interface on the top surface of floor or both surfaces of wall.

   GRABBER CONSTRUCTION PRODUCTS INC – GrabberGard EFS

***Bearing the UL Classification Marking**

Underwriters Laboratories Inc.®

System No. C-AJ-1499

L Rating at Ambient – Less than 1 CFM/ sq. ft.
L Rating at 400°F – Less than 1 CFM/sq. ft.
F Rating – 3 Hr
T Rating – 1/4 Hr

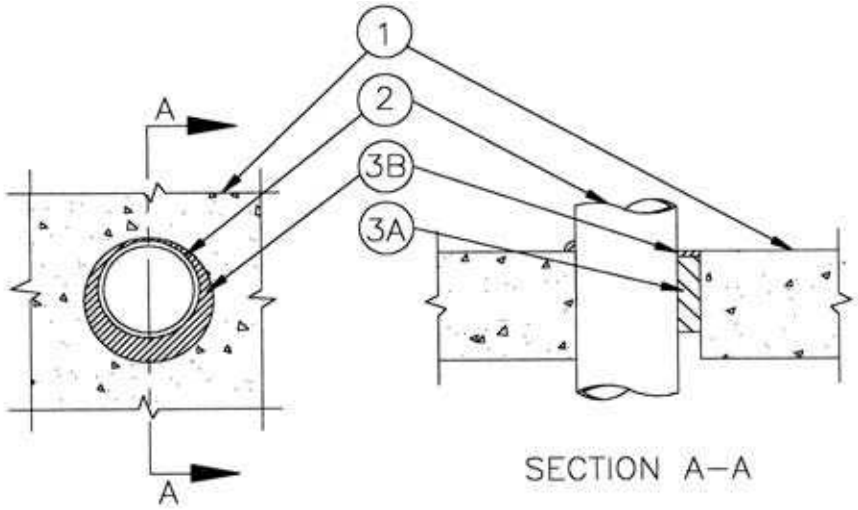

1. **Floor or Wall Assembly** – Min 4-1/2 in. thick lightweight or normal weight (100-150 pcf) concrete. Wall may also be constructed of any UL Classified Concrete Block. Max diam of opening is 25-1/4 in.
   See **Concrete Blocks** (CAZT) category in the Fire Resistance Directory for names of manufacturers.

2. **Through Penetrants** – One metallic pipe, conduit or tubing to be installed either concentrically or eccentrically within the firestop system. The annular space between pipe, conduit or tubing and edge of through opening shall be min 0 in. (point contact) to max 2-1/8 in. Pipe, conduit or tubing to be rigidly supported on both sides of floor or wall assembly. The following types and sizes of metallic pipes, conduits or tubing may be used:
   - **a) Steel Pipe** – Nom 24 in. diam (or smaller) Schedule 10 (or heavier) steel pipe.
   - **b) Conduit** – Nom 6 in. diam (or smaller) rigid steel conduit.
   - **c) Conduit** – Nom 4 in. diam (or smaller) steel electrical metallic tubing.
   - **d) Iron Pipe** – Nom 24 in. diam (or smaller) cast or ductile iron pipe.
   - **e) Copper Tubing** – Nom 6 in. diam (or smaller) Type L (or heavier) copper tube.
   - **f) Copper Pipe** – Nom 6 in. diam (or smaller) Regular (or heavier) copper pipe.

3. **Firestop System** – The firestop system shall consist of the following:
   - **a) Packing Material** – Min 4 in. thickness of 4 pcf mineral wool batt insulation, firmly packed into opening as a permanent form. Packing material to be recessed from top surface of floor or from both surfaces of wall to accommodate the required thickness of fill material (Item 3B).
   - **b) Fill Void or Cavity Material* – Sealant** – Min 1/2 in. thickness of fill material applied within annulus, flush with top surface of floor or both surfaces of wall. At point contact location between penetrant and periphery of opening a min 1/2 in. diam bead of fill material shall be applied at the concrete/penetrant interface on top surface of floor assembly or both surfaces of wall assembly.

GRABBER CONSTRUCTION PRODUCTS INC – GrabberGard EFC

***Bearing the UL Classification Marking**

System No. C-AJ-1500

L Rating at Ambient – Less than 1 CFM/ sq. ft.
L Rating at 400F – Less than 1 CFM/sq. ft.
F Rating – 3 Hr
T Rating – 1/4 Hr

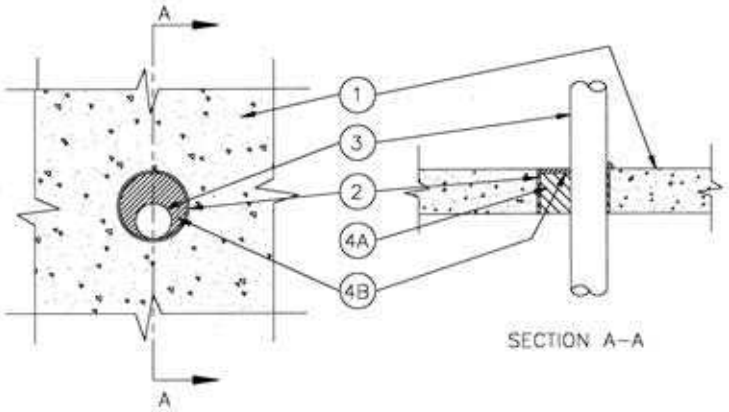

1. **Floor or Wall Assembly** – Min 4-1/2 in. thick lightweight or normal weight concrete (100-150 pcf). Wall may also be constructed of any UL Classified Concrete Blocks*. Max diam of opening is 8 in.
   See Concrete Blocks (CAZT) category in the Fire Resistance Directory for names of manufacturers.
2. **Metallic Sleeve** – (Optional) – Sleeve to be cast or grouted into floor or wall assembly, flush with floor or both wall assembly. The following metallic sleeves may be used within the firestop system:
   a) Nom 8 in. diam (or smaller) Schedule 40 (or heavier) steel sleeve.
   b) Nom 4 in. diam (or smaller) steel electrical metallic tubing (EMT) sleeve.
3. **Through Penetrants** – One metallic pipe, conduit or tubing to be installed either concentrically or eccentrically within the firestop system. The annular space between pipe, conduit or tubing and sleeve or periphery of opening shall be min 0 in. (point contact) to max 3-1/2 in. Pipe, conduit or tubing to be rigidly supported on both sides of floor or wall assembly. The following types and sizes of metallic pipes, conduits or tubing may be used:
   a) Steel Pipe – Nom 4 in. diam (or smaller) Schedule 40 (or heavier) steel pipe.
   b) Iron Pipe – Nom 4 in. diam (or smaller) cast or ductile iron pipe.
   c Conduit – Nom 4 in. diam (or smaller) steel electrical metallic tubing or steel conduit.
   d) Copper Tubing – Nom 3 in. diam (or smaller) Type L (or heavier) copper tube.
   e) Copper Pipe – Nom 3 in. diam (or smaller) Regular (or heavier) copper pipe.
4. **Firestop System** – The firestop system shall consist of the following:
   a) Packing Material – Min 4 in. thickness of min 4 pcf density mineral wool batt insulation, firmly packed into opening as a permanent form. Packing material to be recessed from top surface of floor or from both surfaces of wall as required to accommodate the required thickness of fill material (Item 4B).
   b) Fill Void or Cavity Material* – Sealant – Min 1/2 in. thickness of fill material applied within annulus, flush with top surface of floor or both surfaces of wall. At point contact location between penetrant and sleeve or concrete, a 1/2 in. diam bead of fill material shall be applied at the sleeve or concrete/penetrant interface on the top surface of floor or both surfaces of wall.

GRABBER CONSTRUCTION PRODUCTS INC – GrabberGard EFC

***Bearing the UL Classification Marking**

System No. C-AJ-1596

F Rating – 2 Hr
T Rating – 1/4 Hr

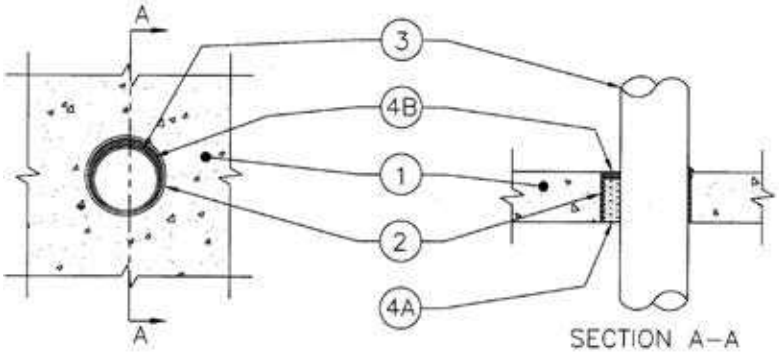

1. **Floor or Wall Assembly** – Min 4-1/2 in. (114 mm) thick lightweight or normal weight (100-150 pcf or 1600-2400 kg/m3) concrete. Wall may also be constructed of any UL Classified Concrete Blocks*. Max diam of opening is 26 in.(660 mm).
   See **Concrete Blocks** (CAZT) category in the Fire Resistance Directory for names of manufacturers.

2. **Steel Sleeve** – Cylindrical steel sleeve, friction fit, cast or grouted into floor or wall opening, flush with top surface of floor or both surfaces of wall assembly. The following types and sizes of steel sleeves may be used:
   - **a) Sheet Metal** – Nom 8 in. (203 mm) diam (or smaller) 24 gauge (or heavier), galv sheet metal sleeve with min 1 in. (25 mm) overlap along longitudinal seam.
   - **b) Steel Pipe** – Nom 26 in. (660 mm) diam (or smaller) Schedule 5 (or heavier) steel pipe.

3. **Through Penetrants** – One metallic pipe, conduit or tubing to be installed either concentrically or eccentrically within the firestop system. The annular space between pipe, conduit or tubing and periphery of opening shall be min 0 in. (point contact) to max 1-7/8 in. (48 mm). Pipe, conduit or tubing to be rigidly supported on both sides of floor or wall assembly. The following types and sizes of metallic pipes or tubing may be use:
   - **a) Steel Pipe** – Nom 24 in. (610 mm) diam (or smaller) Schedule 10 (or heavier) steel pipe.
   - **b) Iron Pipe** – Nom 24 in. (610 mm) diam (or smaller) cast or ductile iron pipe.
   - **c) Conduit** – Nom 6 in. (152 mm) diam (or smaller) steel electrical metallic tubing or rigid steel conduit.
   - **d) Copper Tubing** – Nom 6 in. (152 mm) diam (or smaller) Type L (or heavier) copper tube.
   - **e) Copper Pipe** – Nom 6 in. (152 mm) diam (or smaller) Regular (or heavier) copper pipe.

4. **Firestop System** – The firestop system shall consist of the following:
   - **a) Packing Material** – Min 4-1/4 in. or 4 in. (108 or 102 mm) thickness of min 4 pcf (64 kg/m3) mineral wool batt insulation for sealants B1 and B2, respectively, firmly packed into opening as a permanent form. Packing material to be recessed from top surface of floor or from both surfaces of wall to accommodate the required thickness of fill material (Item 4B)
   - **b1)Fill, Void or Cavity Material*** – Sealant – Min 1/4 in. (6 mm) thickness of fill material sprayed or brushed on top surface of floor or each side of wall assembly. At point contact location between penetrant and periphery of opening, a min 1/4 in. (6 mm) diam bead of fill material shall be applied at the concrete/penetrant interface on the top surface of floor or on both sides of wall.

     GRABBER CONSTRUCTION PRODUCTS INC – GrabberGard EFS

   - **b2) Fill, Void or Cavity Material* – Sealant** – As an alternative to the sealant in Item B1, min 1/2 in. (13 mm) thickness of fill material applied within annulus, flush with top surface of floor or both surfaces of wall. At point contact location between penetrant and periphery of opening, an additional 1/2 in. (13 mm) diam bead of fill material shall be applied at the concrete/penetrant interface on the top surface of floor or both surfaces of wall.

     GRABBER CONSTRUCTION PRODUCTS INC – GrabberGard IFC or GrabberGard EFC

***Bearing the UL Classification Marking**

Underwriters Laboratories Inc.

FL0712

System No. C-AJ-2465

F Rating - 2 Hr
T Rating - 2 Hr

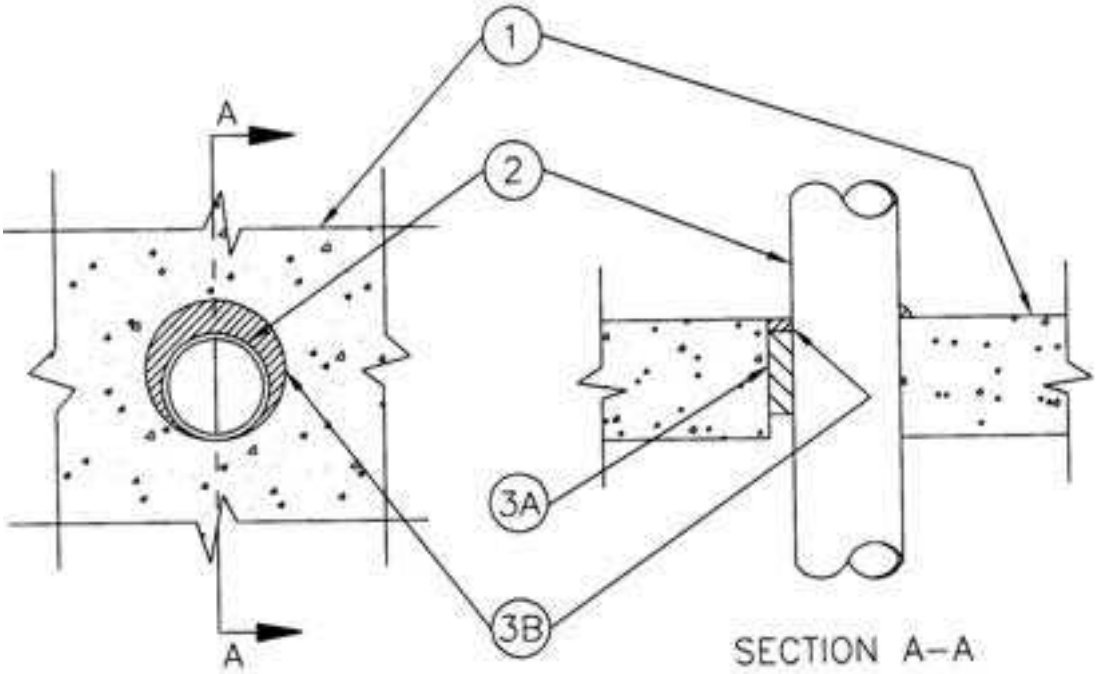

1. **Floor or Wall Assembly** – Min 5 in. thick normal weight (150 pcf) concrete. Wall may also be constructed of any UL Classified Concrete Blocks*. Max diam of opening is 3-3/4 in.
   See **Concrete Blocks** (CAZT) category in the Fire Resistance Directory for names of manufacturers.
2. **Nonmetallic Pipe** – Nom 2 in. diam (or smaller) SDR 11 chlorinated polyvinyl chloride (CPVC) pipe for use in closed (process or supply) piping systems. One pipe to be installed either concentrically or eccentrically within the firestop system. The annular space between pipe and periphery of opening shall be min 3/8 in. to max 1 in. Pipe to be rigidly supported on both sides of floor or wall assembly.
3. **Firestop System** – The firestop system shall consist of the following:
   a) **Packing Material** – Min 3-1/2 in. thickness of min 4 pcf mineral wool batt insulation firmly packed into opening as a permanent form. Packing material to be recessed from top surface of floor or from both surfaces of wall as required to accommodate the required thickness of fill material (Item 3B).
   b) **Fill, Void or Cavity Material* – Sealant** – Min 1/2 in. thickness of fill material applied within annulus, flush with top surface of floor or both surfaces of wall.

GRABBER CONSTRUCTION PRODUCTS INC – GrabberGard IFC

***Bearing the UL Classification Marking**

System No. C-AJ-2470

F Rating - 2 Hr

T Rating - 2 Hr

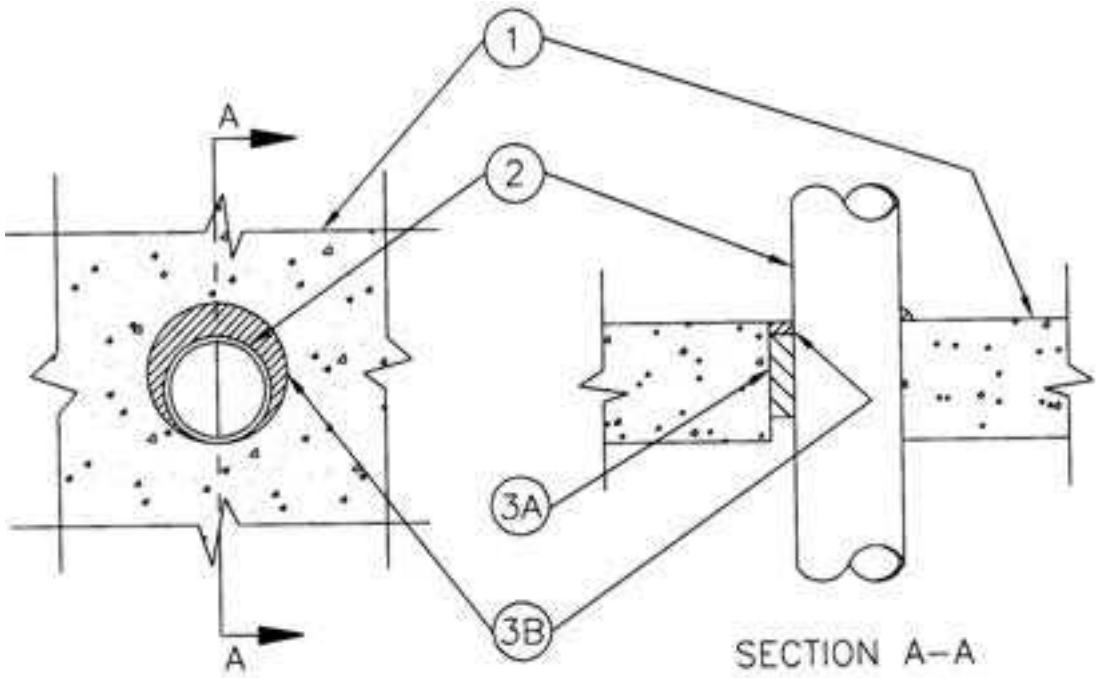

1. **Floor or Wall Assembly** – Min 5 in. thick normal weight (150 pcf) concrete. Wall may also be constructed of any UL Classified Concrete Blocks*. Max diam of opening is 3-3/4 in.

   See Concrete Blocks (CAZT) category in the Fire Resistance Directory for names of manufacturers.

2. **Nonmetallic Pipe** – Nom 2 in. diam (or smaller) SDR 11 chlorinated polyvinyl chloride (CPVC) pipe for use in closed (process or supply) piping systems. One pipe to be installed either concentrically or eccentrically within the firestop system. The annular space between pipe and periphery of opening shall be min 3/8 in. to max 1 in. Pipe to be rigidly supported on both sides of floor or wall assembly.

3. **Firestop System** – The firestop system shall consist of the following:

   a) **Packing Material** – Min 3-1/2 in. thickness of min 4 pcf mineral wool batt insulation firmly packed into opening as a permanent form. Packing material to be recessed from top surface of floor or from both surfaces of wall as required to accommodate the required thickness of fill material (Item 3B).

   b) **Fill, Void or Cavity Material* – Sealant** – Min 1/2 in. thickness of fill material applied within annulus, flush with top surface of floor or both surfaces of wall.

GRABBER CONSTRUCTION PRODUCTS INC – GrabberGard EFC

***Bearing the UL Classification Marking**

System No. C-AJ-2571

F Rating – 2 and 3 Hr (See Item 2)
T Rating – 1-1/2, 2 and 3 Hr (See Item 2)

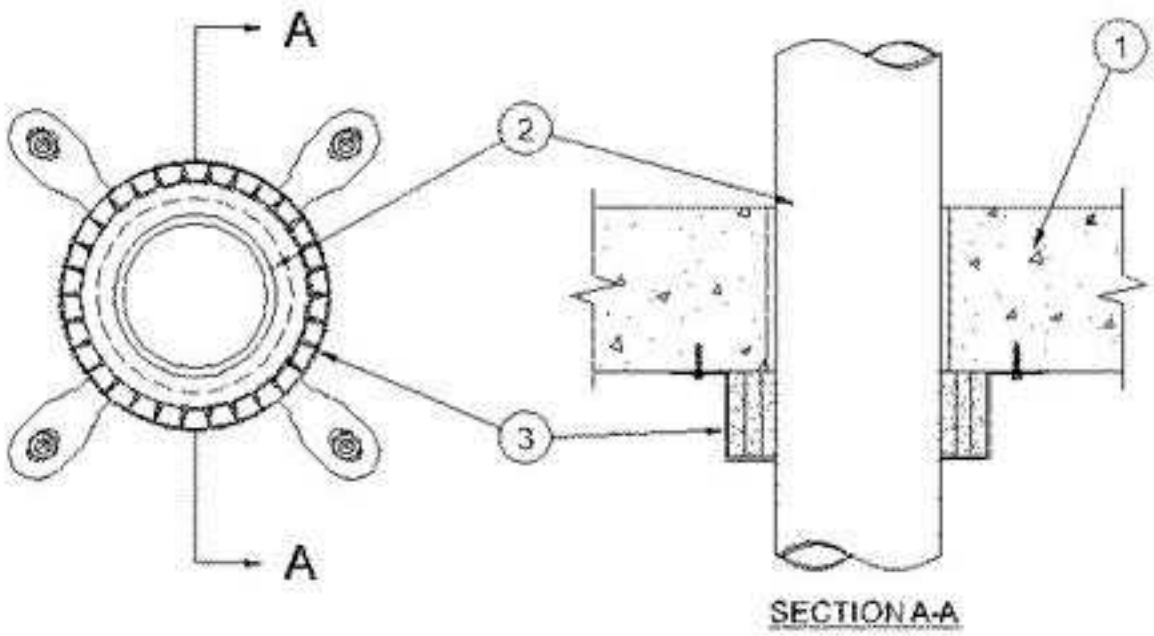

1. **Floor or Wall Assembly** – Min 4-1/2 in. thick reinforced lightweight or normal weight (100-150 pcf) concrete. Wall may also be constructed of any UL Classified Concrete Blocks*. Max diam of opening is 5 in.
   See Concrete Block (CAZT) category in the Fire Resistance Directory for names of manufacturers.

2. **Through Penetrants** – One nonmetallic pipe or conduit to be centered within the firestop system. The annular space between the pipe or conduit and the periphery of the opening is dependent upon the type and nom diam of the pipe or conduit as shown in the table below. The pipe or conduit to be rigidly supported on both sides of floor or wall. The following types and sizes of pipes or conduits may be used:
   - **a) Polyvinyl Chloride (PVC) Pipe** – Nom 4 in. diam (or smaller) Schedule 40 cellular or solid core PVC pipe for use in closed (process or supply) or vented (drain, waste, or vent) piping systems.
   - **b) Rigid Nonmetallic Conduit+** – Nom 4 in. diam (or smaller) Schedule 40 PVC conduit installed in accordance with the National Electrical Code (NFPA No. 70).
   - **c) Chlorinated Polyvinyl Chloride (CPVC) Pipe** – Nom 4 in. diam (or smaller) SDR 13.5 CPVC pipe for use in closed (process or supply) piping systems.
   - **d) Acrylonitrile Butadiene Styrene (ABS) Pipe** – Nom 4 in. diam (or smaller) Schedule 40 cellular or solid core ABS pipe for use in closed (process or supply) or vented (drain, waste or vent) piping systems.

C-AJ-2571

The F and T Ratings of the firestop system are dependent upon the type and max diam of the through penetrant and the nom annular space within the opening as shown in the table below:

Max Diam of Penetrant [in.]	Type of Through Penetrant	Nom Annular Space [in.]	F Rating, [Hr]	T Rating, [Hr]
2	PVC Pipe or PVC Conduit	3/16	3	3
2	CPVC Pipe	3/16	3	3
2	ABS Pipe	3/16	2	2
4	PVC Pipe or PVC Conduit	1/4	2	1-1/2
4	CPVC Pipe	1/4	2	1-1/2
4	ABS Pipe	1/4	2	2

3. **Firestop Device*** – Steel collar lined with an intumescent insert sized to fit the specific diam of the through penetrant. Device shall be wrapped around the outer circumference of the through penetrant and secured to the underside of the floor or both surfaces of the wall in accordance with the accompanying installation instructions. Device secured to concrete at each tab by means of min 1/4 in. by 1-1/4 in. steel anchor bolts or 3/16 in. diam by 1-3/4 in. long masonry steel screws in conjunction with 1/4 in. by 1-1/2 in. diam steel fender washers.

GRABBER CONSTRUCTION PRODUCTS INC – GPC

***Bearing the UL Classification Mark**
+Bearing the UL Listing Mark

System No. C-AJ-2619

F Rating – 2 and 3 Hr (See Item 2)
T Rating – 2 and 2-3/4 Hr (See Item 2)

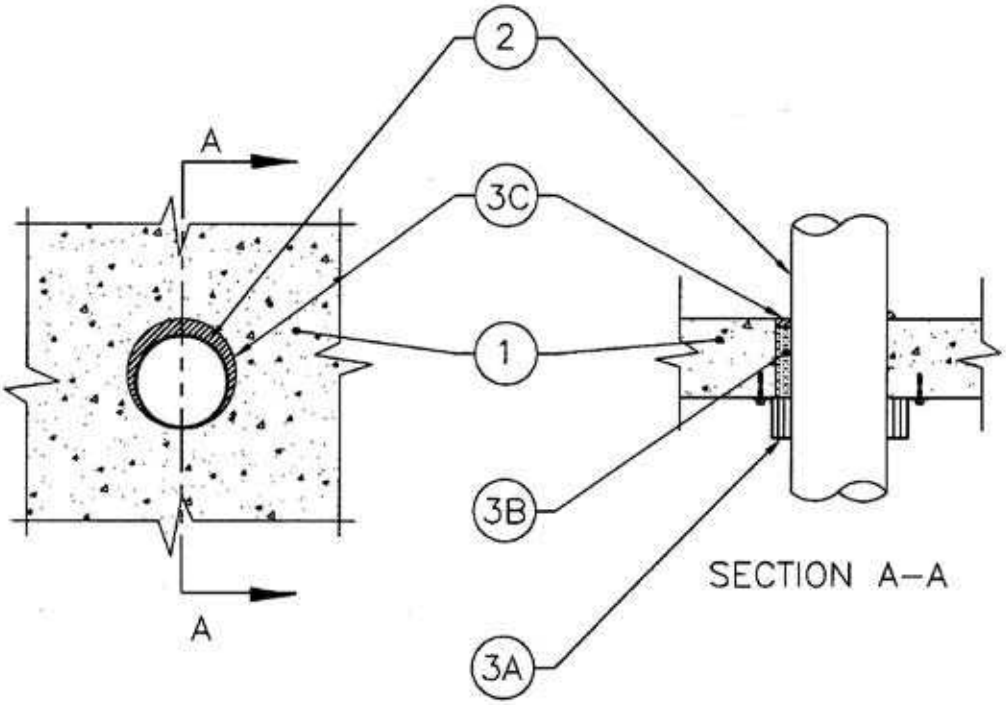

1. **Floor or Wall Assembly** – Min 4-1/2 in. (114 mm) thick reinforced lightweight or normal weight (100-150 pcf or 1600-2400 kg/m3) concrete floor or min 5 in. (127 mm) thick reinforced lightweight or normal weight concrete wall. Wall may also be constructed of any UL Classified Concrete Blocks*. Max diam of opening is 7 in. (178 mm).

   See **Concrete Blocks** (CAZT) category in the Fire Resistance Directory for names of manufactures.

2. **Through Penetrants** – One nonmetallic pipe or conduit to be installed either concentrically or eccentrically within the firestop system for used in closed (process or supply) or vented (drain waste or vent) piping systems. The annular space between pipe or conduit and periphery of the opening shall be min 0 in. (point contact) to max 1/2 in. (13 mm). Pipe or conduit to be rigidly supported on both sides of the floor or wall assembly. The following types and sizes of nonmetallic pipes or conduit may be used; solid core polyvinyl chloride (PVC, cellular core polyvinyl chloride (ccPVC), chlorinated polyvinyl chloride (CPVC), solid core acrylonitrile butadiene styrene (ABS), cellular core acrylonitrile butadiene styrene (ccABS), Fire Retardant Polypropylene (FRPP).

Pipe Type	Nom Diam, In. (mm)	F	T
PVC, ABS or FRPP	1-1/2 to 2 (38 to 51)	3	2-3/4
PP	1-1/2 to 2 (38 to 51)	3	3
PVC, ccPVC, ccABS or FRPP	3 to 4 (76 to 102)	2	2
PP	3 to 4 (76 to 102)	3	2-3/4
ABS, CPVC or	6 (152)	2	2

Rigid Nonmetallic Conduit++

C-AJ-2619

3. **Firestop System** – The firestop system shall consist of the following:

a) Firestop Device* – Collar– Collar to be installed in accordance with the accompanying installation instructions. Collar to be installed and latched around pipes such that collar completely overlaps periphery of opening. Collar secured to underside of floor or both sides of wall with min 3/16 in. (4.8 mm) diam by min 1-1/4 in. (32 mm) long steel expansion bolts. Min of two, three or four anchor bolts, symmetrically located, for nom 2 in. (51 mm) diam (and smaller), nom 3 in. (76 mm) diam and nom 4 and 6 in. (102 and 152 mm) diam pipes, respectively.

GRABBER CONSTRUCTION PRODUCTS INC – GrabberGard GPC Collar

b) Packing Material – Min 4 in. (102 mm) thickness of min 4 pcf (64 kg/m3) mineral wool batt insulation firmly packed into opening as a permanent form, flush with bottom surface of floor assembly or both sides of wall. Packing material to be recessed from top surface of floor or both surfaces of wall assembly to accommodate the required thickness of fill material.

c) Fill Void or Cavity Material* – Sealant – Min 1/2 in. (13 mm) thickness of fill material applied within annulus, flush with top surface of floor or both surfaces of the wall assembly. At point contact location between penetrant and periphery of opening, an additional 1/2 in. (13 mm) diam bead of fill material shall be applied at the concrete penetrant interface on top surface of floor.

GRABBER CONSTRUCTION PRODUCTS INC – GrabberGard IFC or GrabberGard EFC

***Bearing the UL Classification Marking**
++Bearing the UL Listing Mark

System No. C-AJ-2620

F Rating – 2 Hr

T Rating – 3/4 Hr

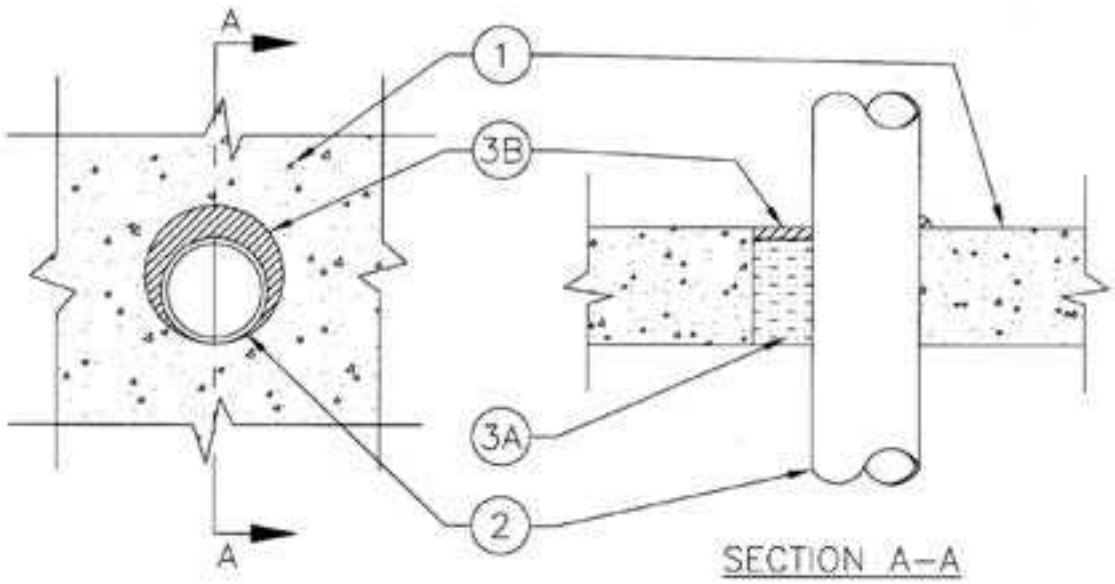

1. **Floor or Wall Assembly** – Min 4-1/2 in. (114 mm) thick lightweight or normal weight (100-150 pcf or 1600-2400 kg/m3) concrete or min 5 in. (127 mm) thick lightweight or normal weight concrete wall. Wall may also be constructed of any UL Classified Concrete Blocks*. Max diam of opening is 8 in. (203 mm).

   See **Concrete Blocks** (CAZT) category in the Fire Resistance Directory for names of manufacturers.

2. **Through Penetrant* – Glass Pipe** – Nom 6 in. (152 mm) diam (or smaller) glass pipe for use in closed (process or supply) or vented (drain, waste or vent) piping systems. One pipe to be installed concentrically or eccentrically within the firestop system. Pipe coupling to be located a min. of 12 in. (305 mm) from floor or wall surfaces. The annular space between pipe and periphery of opening shall be min 0 in. (point contact) to max 1-5/8 in. (41 mm). Pipe to be rigidly supported on both sides of floor or wall.

SCHOTT NORTH AMERICA INC

3. **Firestop System** – The firestop system shall consist of the following:
   - **a) Packing Material** – Min 4 in. (102 mm) thickness of min 4 pcf (64 kg/m3) mineral wool batt insulation firmly packed into opening as a permanent form. Packing material to be recessed from top surface of floor or from both surfaces of wall as required to accommodate the required thickness of fill material.
   - **b) Fill, Void or Cavity Material* – Sealant** – Min 1/2 in. (13 mm) thickness of fill material applied within annulus, flush with top surface of floor or both surfaces of wall. At point contact location between pipe and periphery of opening, a min 1/2 in. (13 mm) diam bead of fill material shall be applied at the periphery of concrete/pipe interface on the top surface of floor or both surfaces of wall.

GRABBER CONSTRUCTION PRODUCTS INC – GrabberGard IFC

***Bearing the UL Classification Marking**

System No. C-AJ-3230

F Rating - 3 Hr

T Rating - 1/2 Hr

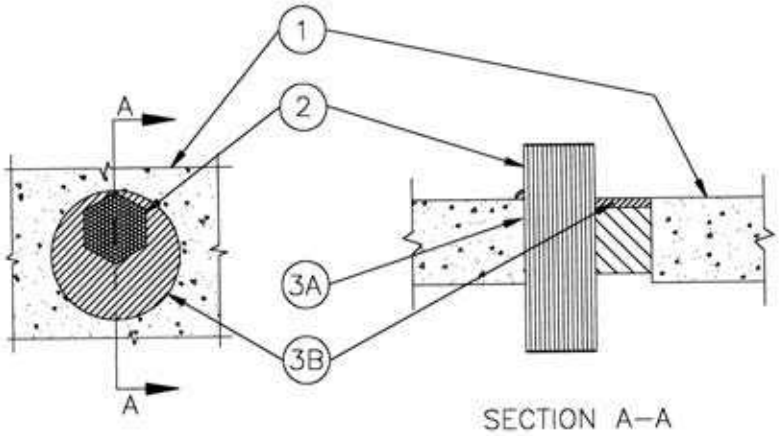

1. **Floor or Wall Assembly** – Min 5 in. thick normal weight (150 pcf) concrete. Wall may also be constructed of any UL Classified Concrete Blocks*. Max diam of opening is 10-1/4 in.

   See **Concrete Blocks** (CAZT) category in the Fire Resistance Directory for names of manufacturers.

2. **Cables** – Aggregate cross-sectional area of cable in opening to be max 27 percent of the cross-sectional area of the opening. The annular space between cables and periphery shall be min 0 in. (point contact) to max 3-1/2 in. Cables to be rigidly supported on both sides of floor or wall assembly. Any combination of the following types and sizes of copper conductor cables may be used:

   a) 1/C 750 kcmil (or smaller) copper conductor polyvinyl chloride (PVC) jacketed aluminum clad or steel clad TEK cable with cross-linked polyethylene (XLPE) insulation.

   b) 3/C 350 kcmil (or smaller) copper conductor PVC jacketed aluminum clad or steel clad TEK cable with XLPE insulation.

   c) 4/C No. 14 AWG (or smaller) copper conductor PVC jacketed aluminum clad or steel clad TEK cable with XLPE insulation.

   d) Max 25 pair No. 20 AWG (and smaller) copper conductor PVC jacketed cable with PVC insulation.

   e) 1/C 400 kcmil (or smaller) aluminum or copper conductor cable with XLPE insulation.

   f) 4/C No. 6 AWG (or smaller) copper conductor PVC jacketed cable with XLPE insulation

   g) Through Penetration Product* – Max 3/C No. 2 AWG (or smaller) aluminum or steel clad **Armored Cable** or aluminum or steel clad **Metal Clad Cable** with copper conductors.

ALFEX CORP

3. **Firestop System** – The firestop system shall consist of the following:

   a) Packing Material – Min 3-1/2 in thickness of min 4 pcf mineral wool batt insulation firmly packed into opening as a permanent form. Packing material to be recessed from top surface of floor or from both surfaces of wall as required to accommodate the required thickness of fill material (Item 3B).

   b) Fill, Void or Cavity Material* – Sealant – Min 1/2 in. thickness of fill material applied within annulus, flush with top surface of floor or both surfaces of wall. Sealant to be forced into interstices of cable group to max extent possible.

GRABBER CONSTRUCTION PRODUCTS INC – GrabberGard IFC

***Bearing the UL Classification Marking**

System No. C-AJ-3233

F Rating – 2 Hr
T Rating – 1/2 Hr

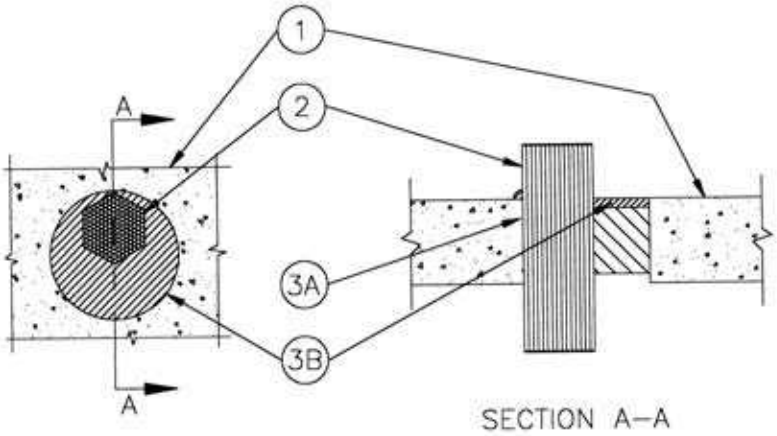

1. **Floor or Wall Assembly** – Min 5 in. thick normal weight (150 pcf) concrete. Wall may also be constructed of any UL Classified Concrete Blocks*. Max diam of opening is 10-1/4 in.

   See Concrete Blocks (CAZT) category in the Fire Resistance Directory for names of manufacturers.

2. **Cables** – Aggregate cross-sectional area of cable in opening to be max 27 percent of the cross-sectional area of the opening. The annular space between cables and periphery shall be min 0 in. (point contact) to max 3-1/2 in. Cables to be rigidly supported on both sides of floor or wall assembly. Any combination of the following types and sizes of copper conductor cables may be used:

   a) 1/C 750 kcmil (or smaller) copper conductor polyvinyl chloride (PVC) jacketed aluminum clad or steel clad TEK cable with cross-linked polyethylene (XLPE) insulation.
   b) 3/C 350 kcmil (or smaller) copper conductor PVC jacketed aluminum clad or steel clad TEK cable with XLPE insulation.
   c) 4/C No. 14 AWG (or smaller) copper conductor PVC jacketed aluminum clad or steel clad TEK cable with XLPE insulation.
   d) Max 25 pair No. 20 AWG (and smaller) copper conductor PVC jacketed cable with PVC insulation.
   e) 1/C 400 kcmil (or smaller) aluminum or copper conductor cable with XLPE insulation.
   f) | 4/C No. 6 AWG (or smaller) copper conductor PVC jacketed cable with XLPE insulation
   g) Through Penetration Product* – Max 3/C No. 2 AWG (or smaller) aluminum or steel clad **Armored Cable*** or aluminum or steel clad **Metal Clad Cable*** with copper conductors.

ALFEX CORP

3. **Firestop System** – The firestop system shall consist of the following:

   a) Packing Material – Min 3-1/2 in thickness of min 4 pcf mineral wool batt insulation firmly packed into opening as a permanent form. Packing material to be recessed from top surface of floor or from both surfaces of wall as required to accommodate the required thickness of fill material (Item 3B).
   b) Fill, Void or Cavity Material* – Sealant – Min 1/2 in. thickness of fill material applied within annulus, flush with top surface of floor or both surfaces of wall. Sealant to be forced into interstices of cable group to max extent possible.

GRABBER CONSTRUCTION PRODUCTS INC – GrabberGard EFC

***Bearing the UL Classification Marking**

System No. C-AJ-3302

F Rating – 3 Hr
T Rating – 1 Hr

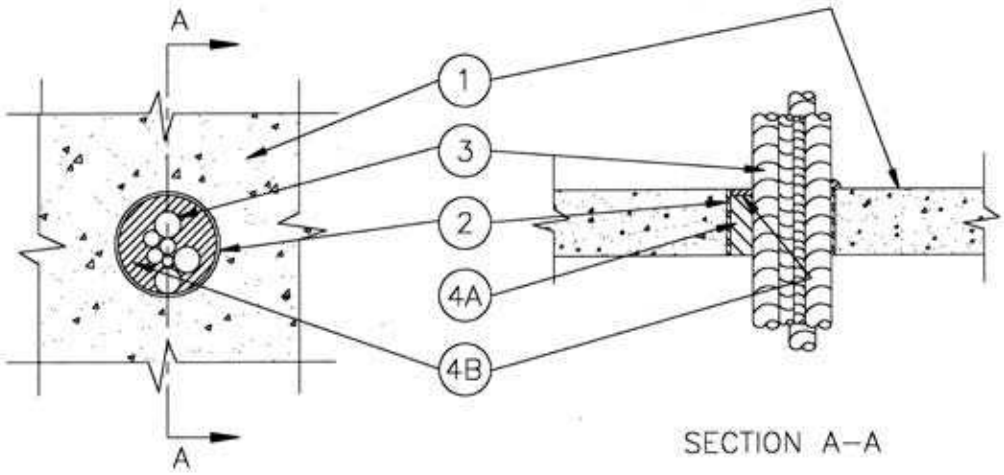

1. **Floor or Wall Assembly** – Min 4-1/2 in. (114 mm)thick lightweight or normal weight (100-150 pcf or 1600-2400kg/m3) concrete. Wall may also be constructed of any UL **Classified Concrete Blocks***. Max diam of opening is 8 in. (203 mm).
   See **Concrete Blocks** (CAZT) category in the Fire Resistance Directory for names of manufacturers.

2. **Metallic Sleeve** – (Optional) – Nom 8 in. (203 mm) (or smaller) Schedule 40 (or heavier) steel sleeve, cast or grouted into wall or floor assembly, flush with both surfaces of floor or wall assembly.

3. **Cables** – Aggregate cross sectional area of cables in opening to be max 27 percent of the cross sectional area of the opening. Cables installed either concentrically or eccentrically within the firestop system. The annular space between cables and sleeve or periphery of opening shall be min 0 in. (point contact) to max 3-1/2 in. (89 mm). Cables to be rigidly supported on both sides of wall assembly. The following types and sizes of cables may be used:
   - **a)** 1/C 750 kcmil (or smaller) copper conductor aluminum clad or steel clad TEK cable with cross-linked polyethylene (XLPE) insulation, with or without PVC jacket.
   - **b)** 3/C 350 kcmil (or smaller) copper conductor aluminum clad or steel clad TEK cable with XLPE insulation, with or without PVC jacket.
   - **c)** 4/C No. 14 AWG (or smaller) copper conductor aluminum clad or steel clad TEK cable with XLPE insulation, with or without PVC jacket.
   - **d)** Max 25 pair No. 20 AWG (and smaller) copper conductor cable with PVC insulation, with or without PVC jacket.
   - **e)** 1/C 400 kcmil (or smaller) aluminum or copper conductor cable with XLPE insulation, with or without PVC jacket.
   - **f)** 4/C No. 6 AWG (or smaller) copper conductor cable with XLPE insulation, with or without PVC jacket.
   - **g) Through Penetrating Product*** – Max 3/C No. 2 AWG (or smaller) aluminum or steel clad Armored Cable* or aluminum or steel clad **Metal Clad Cable*** with copper conductors

     ALFLEX CORP

   - **h) Through Penetrating Product*** – Max four copper conductor No. 2/0 AWG (or smaller) aluminum or steel Metal-Clad Cable or max four copper conductor No. 1 AWG (or smaller) aluminum Armored Cable or max 750 kcmil (or smaller) aluminum or copper Type THHN or XHHW conductors, jacketed or unjacketed aluminum or steel **Metal Clad Cable.**

     SOUTHWIRE CO — Type MC, Type AC

C-AJ-3302

1. **Firestop System** – The firestop system shall consist of the following:

a) Packing Material – Min 4 in. (102 mm) or 4-1/4 in. (108 mm) thickness of min 4 pcf (64 kg/m3) density mineral wool batt insulation for sealants B1 and B2, respectively, firmly packed into opening as a permanent form. Packing material to be recessed from top surface of floor or from both surfaces of wall as to accommodate the required thickness of fill material (Item 4B).

b1) Fill Void or Cavity Material* – Sealant – Min 1/2 in. (13 mm) thickness of fill material applied within annulus, flush with top surface of floor or both surfaces of wall. At point contact location between cables and sleeve or concrete, a min 1/2 in. (13 mm) diam bead of fill material shall be applied at the sleeve or concrete/cable interface on top surface of floor or both surfaces of wall.

GRABBER CONSTRUCTION PRODUCTS INC – GrabberGard IFC, EFC

b2) Fill Void or Cavity Material* – Sealant – Min 1/4 in. (6 mm) thickness of fill material applied within annulus, flush with top surface of floor or min 1/8 in. (3.2 mm) thickness of fill material applied within annulus, flush with both surfaces of wall. At point contact location between cables and sleeve or concrete, a min 1/4 in. (6 mm) diam bead of fill material shall be applied at the sleeve or concrete/cable interface on top surface of floor or both surfaces of wall assembly.

GRABBER CONSTRUCTION PRODUCTS INC – GrabberGard EFS

***Bearing the UL Classification Marking**

System No. C-AJ-5261

F Rating - 2 Hr

T Rating - 3/4 & 1-1/4 Hr (See Item 2)

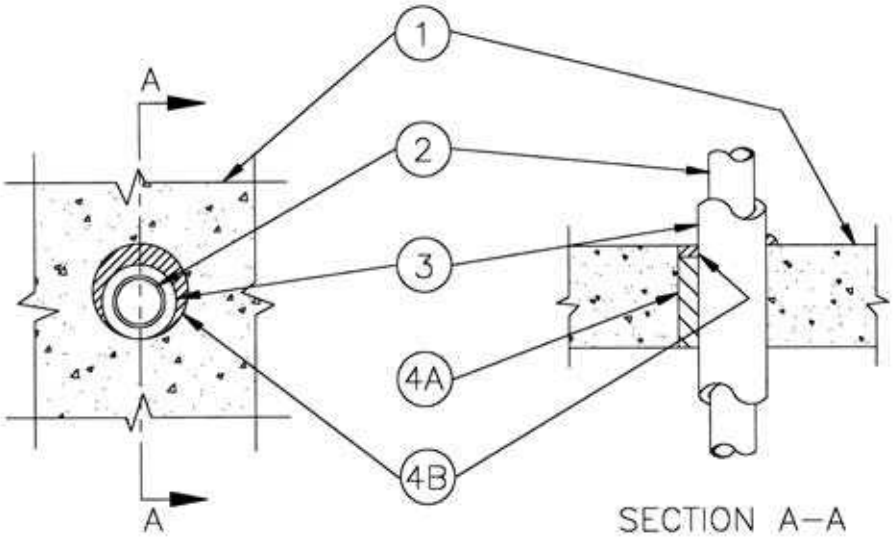

1. **Floor or Wall Assembly** – Min 4-1/2 in. thick reinforced lightweight or normal weight (100-150 pcf) concrete. Wall may also be constructed of any UL Classified Concrete Blocks*. Max diam of opening is 4-1/2 in.
   See Concrete Blocks (CAZT) category in the Fire Resistance Directory for names of manufacturers.

2. **Through Penetrants** – One metallic pipe or tubing to be installed either concentrically or eccentrically within the firestop system. Pipe or tubing to be rigidly supported on both sides of floor or wall assembly. The following types and sizes of metallic pipes or tubing may be used:
   - **a) Steel Pipe** – Nom 2 in. diam (or smaller) Schedule ST 40 (or heavier) steel pipe.
   - **b) Iron Pipe** – Nom 2 in. diam (or smaller) cast or ductile iron pipe.
   - **c) Copper Tubing** – Nom 2 in. diam (or smaller) Type L (or heavier) copper tubing.
   - **d) Copper Pipe** – Nom 2 in. diam (or smaller) Regular (or heavier) copper pipe.

   T Rating is 1-1/4 Hr for penetrants A, B. T Rating is 3/4 Hr for penetrants C and D.

3. **Tube Insulation – Plastics+** – Nom 3/4 in. thick acrylonitrile butadiene/polyvinyl chloride (AB/PVC) flexible foam furnished in the form of tubing. The annular space between the insulated pipe and the edge of the through opening shall be min 0 in. (point contact) to max 7/8 in.
   See Plastics+ (QMFZ2) category in the Recognized Component Directory for names of manufacturers. Any Recognized Component tube insulation material meeting the above specifications and having a UL 94 Flammability Classification of 94-5VA may be used.

4. **Firestop System** – The firestop system shall consist of the following:
   - **a) Packing Material** – Min 4 in. thickness of min 4 pcf mineral wool batt insulation firmly packed into opening as a permanent form. Packing material to be recessed from top surface of floor or from both surfaces of wall as required to accommodate the required thickness of fill material.
   - **b) Fill, Void or Cavity Material* – Sealant** – Min 1/2 in. thickness of fill material applied within the annulus, flush with top surface of floor or with both surfaces of wall.

GRABBER CONSTRUCTION PRODUCTS INC – GrabberGard IFC

+Bearing the UL Recognized Component Mark
***Bearing the UL Classification Marking**

System No. C-AJ-5262

F Rating - 2 Hr
T Rating - 1-3/4 Hr

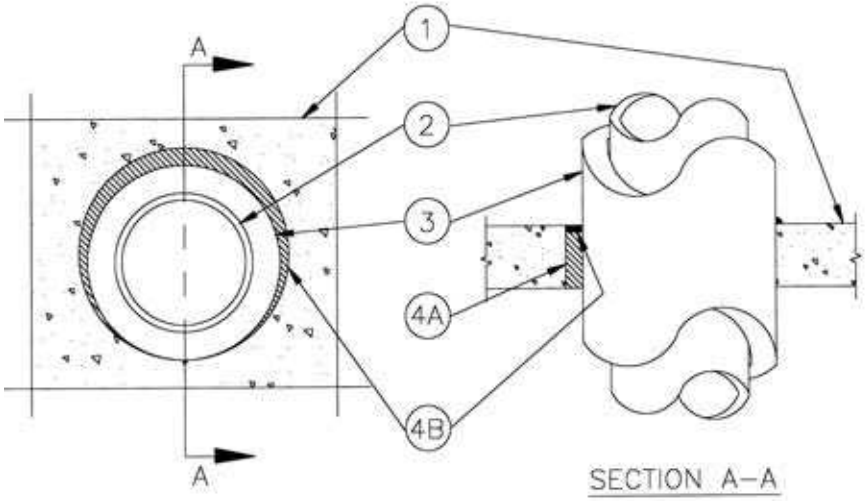

1. **Floor or Wall Assembly** – Min 4-1/2 in. thick reinforced lightweight or normal weight (100-150 pcf) concrete. Wall may also be constructed of any UL Classified Concrete Blocks*. Max diam of opening is 18 in.
   See **Concrete Blocks** (CAZT) category in the Fire Resistance Directory for names of manufacturers.

2. **Through Penetrants** – One metallic pipe or tubing to be installed either concentrically or eccentrically within the firestop system. Pipe or tubing to be rigidly supported on both sides of floor or wall assembly. The following types and sizes of metallic pipes or tubing may be used:
   - **a) Steel Pipe** – Nom 12 in. diam (or smaller) Schedule ST 40 (or heavier) steel pipe.
   - **b) Iron Pipe** – Nom 12 in. diam (or smaller) cast or ductile iron pipe.
   - **c) Copper Tubing** – Nom 2 in. diam (or smaller) Type L (or heavier) copper tubing.
   - **d) Copper Pipe** – Nom 2 in. diam (or smaller) Regular (or heavier) copper pipe.

3. **Pipe Covering*** – Max 2 in. thick hollow cylindrical heavy density glass fiber units jacketed on the outside with an all service jacket. Longitudinal joints sealed with metal fasteners or factory-applied self-sealing lap tape. Transverse joints secured with metal fasteners or with butt tape supplied with the product. The annular space between the insulated pipe and the edge of the through opening shall be min 0 in. (point contact) to max 1-1/4 in.
   See Pipe and Equipment Covering – Materials (BRGU) category in the Building Materials Directory for names of manufacturers. Any pipe covering material meeting the above specifications and bearing the UL Classification Marking with a Flame Spread Index of 25 or less and a Smoke Developed Index of 50 or less may be used.

4. **Firestop System** – The firestop system shall consist of the following:
   - **a) Packing Material** – Min 4 in. thickness of min 4 pcf mineral wool batt insulation firmly packed into opening as a permanent form. Packing material to be recessed from top surface of floor or from both surfaces of wall as required to accommodate the required thickness of fill material.
   - **b) Fill, Void or Cavity Material* – Sealant** – Min 1/2 in. thickness of fill material applied within the annulus, flush with top surface of floor or with both surfaces of wall. At the point contact location between pipe and concrete, a min 3/8 in. diam bead of fill material shall be applied at the concrete/pipe-covering interface on the top surface of floor and on both surfaces of wall.

GRABBER CONSTRUCTION PRODUCTS INC – GrabberGard IFC

***Bearing the UL Classification Marking**

System No. C-AJ-5266

F Rating - 2 Hr
T Rating - 1-3/4 Hr

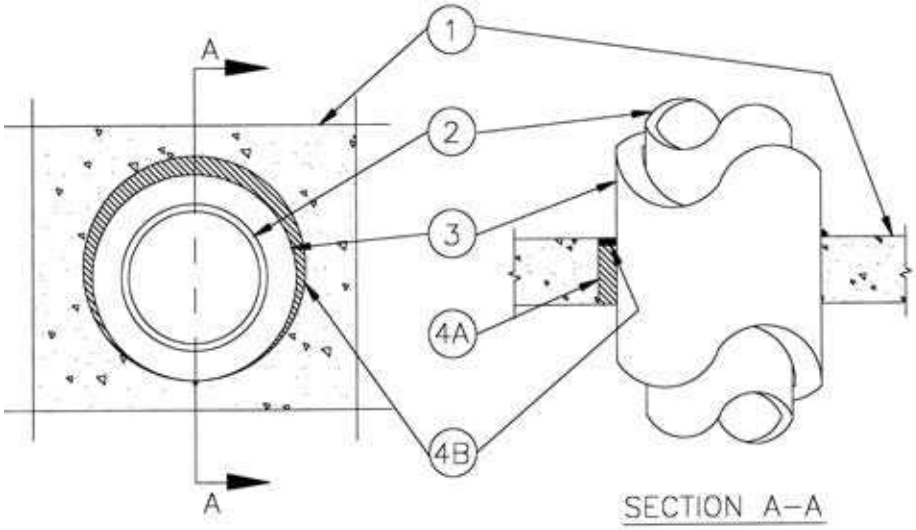

1. **Floor or Wall Assembly** – Min 4-1/2 in. thick reinforced lightweight or normal weight (100-150 pcf) concrete. Wall may also be constructed of any UL Classified **Concrete Blocks***. Max diam of opening is 18 in.
   See **Concrete Blocks** (CAZT) category in the Fire Resistance Directory for names of manufacturers.

2. **Through Penetrants** – One metallic pipe, conduit or tubing to be installed either concentrically or eccentrically within the firestop system. Pipe, conduit or tubing to be rigidly supported on both sides of floor or wall assembly. The following types and sizes of metallic pipes, conduits or tubing may be used:
   - **a) Steel Pipe** – Nom 12 in. diam (or smaller) Schedule ST 40 (or heavier) steel pipe.
   - **b) Iron Pipe** – Nom 12 in. diam (or smaller) cast or ductile iron pipe.
   - **c) Copper Tubing** – Nom 2 in. diam (or smaller) Type L (or heavier) copper tubing.
   - **d) Copper Pipe** – Nom 2 in. diam (or smaller) Regular (or heavier) copper pipe.

3. **Pipe Covering*** – Max 2 in. thick hollow cylindrical heavy density glass fiber units jacketed on the outside with an all service jacket. Longitudinal joints sealed with metal fasteners or factory-applied self-sealing lap tape. Transverse joints secured with metal fasteners or with butt tape supplied with the product. The annular space between the insulated pipe and the edge of the through opening shall be min 0 in. (point contact) to max 1-1/4 in.
   See **Pipe and Equipment Covering** – Materials (BRGU) category in the Building Materials Directory for names of manufacturers. Any pipe covering material meeting the above specifications and bearing the UL Classification Marking with a Flame Spread Index of 25 or less and a Smoke Developed Index of 50 or less may be used.

4. **Firestop System** – The firestop system shall consist of the following:
   - **a) Packing Material** – Min 4 in. thickness of min 4 pcf mineral wool batt insulation firmly packed into opening as a permanent form. Packing material to be recessed from top surface of floor or from both surfaces of wall as required to accommodate the required thickness of fill material (Item 4B).
   - **b) Fill, Void or Cavity Material* – Sealant** – Min 1/2 in. thickness of fill material applied within the annulus, flush with top surface of floor or with both surfaces of wall. At the point contact location between pipe and concrete, a min 3/8 in. diam bead of fill material shall be applied at the concrete/pipe-covering interface on the top surface of floor and on both surfaces of wall.

GRABBER CONSTRUCTION PRODUCTS INC – GrabberGard EFC

***Bearing the UL Classification Marking**

System No. C-AJ-5267

F Rating - 2 Hr
T Rating - 3/4 & 1-1/4 Hr (See Item 2)

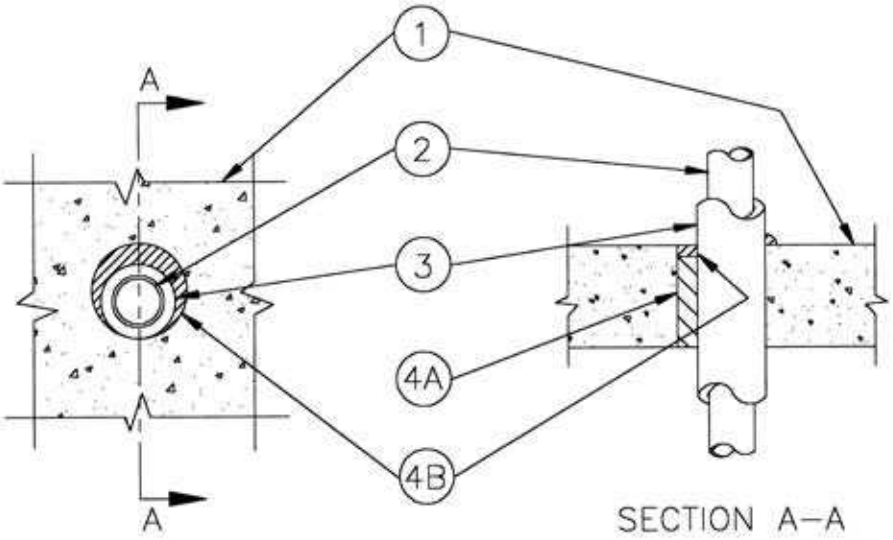

1. **Floor or Wall Assembly** – Min 4-1/2 in. thick reinforced lightweight or normal weight (100-150 pcf) concrete. Wall may also be constructed of any UL Classified **Concrete Blocks***. Max diam of opening is 4-1/2 in.
   See **Concrete Blocks** (CAZT) category in the Fire Resistance Directory for names of manufacturers.

2. **Through Penetrants** – One metallic pipe or tubing to be installed either concentrically or eccentrically within the firestop system. Pipe or tubing to be rigidly supported on both sides of floor or wall assembly. The following types and sizes of metallic pipes or tubing may be used:
   - **a) Steel Pipe** – Nom 2 in. diam (or smaller) Schedule ST 40 (or heavier) steel pipe.
   - **b) Iron Pipe** – Nom 2 in. diam (or smaller) cast or ductile iron pipe.
   - **c) Copper Tubing** – Nom 2 in. diam (or smaller) Type L (or heavier) copper tubing.
   - **d) Copper Pipe** – Nom 2 in. diam (or smaller) Regular (or heavier) copper pipe.

   T Rating is 1-1/4 Hr for penetrants A, B. T Rating is 3/4 Hr for penetrants C and D.

3. **Tube Insulation – Plastics+** – Nom 3/4 in. thick acrylonitrile butadiene/polyvinyl chloride (AB/PVC) flexible foam furnished in the form of tubing. The annular space between the insulated pipe and the edge of the through opening shall be min 0 in. (point contact) to max 7/8 in.
   See **Plastics+** (QMFZ2) category in the Recognized Component Directory for names of manufacturers. Any Recognized Component tube insulation material meeting the above specifications and having a UL 94 Flammability Classification of 94-5VA may be used.

4. **Firestop System** – The firestop system shall consist of the following:
   - **a) Packing Material** – Min 4 in. thickness of min 4 pcf mineral wool batt insulation firmly packed into opening as a permanent form. Packing material to be recessed from top surface of floor or from both surfaces of wall as required to accommodate the required thickness of fill material.
   - **b) Fill, Void or Cavity Material* – Sealant** – Min 1/2 in. thickness of fill material applied within the annulus, flush with top surface of floor or with both surfaces of wall.

GRABBER CONSTRUCTION PRODUCTS INC – GrabberGard EFC

+Bearing the UL Recognized Component Mark
***Bearing the UL Classification Marking**

FL0712

Underwriters Laboratories Inc.®

System No. C-AJ-5326

F Rating - 2 Hr
T Rating – 0 and 2 Hr (See Item 4)

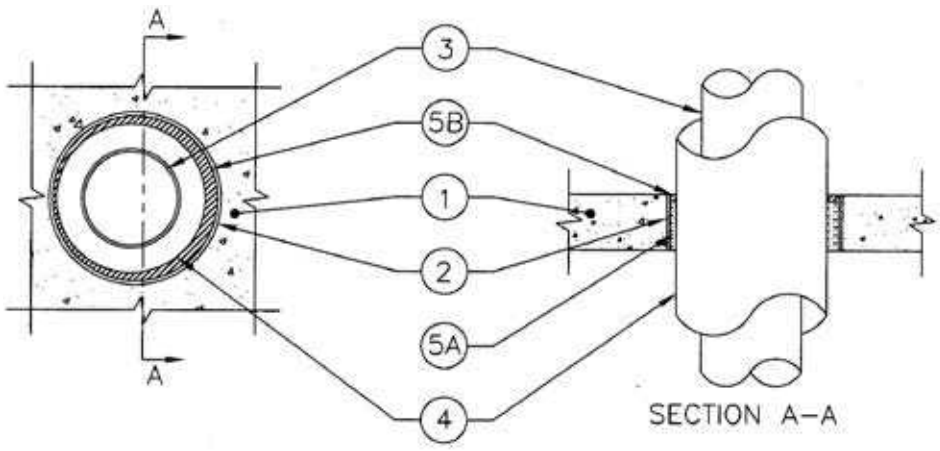

1. **Floor or Wall Assembly** – Min 4-1/2 in. (114 mm) thick reinforced lightweight or normal weight (100-150 pcf or 1600-2400 kg/m3) structural concrete floor. Min. 5 in. (127 mm) thick reinforced lightweight or normal weight (100-150 pcf or 1600-2400 kg/m3) concrete wall. Wall may also be constructed of any UL **Classified Concrete Blocks.*** Max diam of opening to be 18 in. (457 mm).
   See **Concrete Blocks** (CAZT) category in the Fire Resistance Directory for names of Manufacturers.

2. **Metallic Sleeve** – Cylindrical steel sleeve fabricated from 24 gauge (or heavier) galv sheet metal and having a min 1 in. (25 mm) overlap along longitudinal seam. Sleeve friction fit, cast or grouted into opening, flush with the top and bottom surfaces of floor or both sides of wall assembly.

3. **Through Penetrant** – One metallic pipe to be installed either concentrically or eccentrically within the firestop system. Pipe to be rigidly supported on both sides of floor or wall assembly. The following types and sizes of metallic pipes may be used:
   a) Steel Pipe – Nom 12 in. (305 mm) diam (or smaller) Schedule 40 (or heavier) steel pipe.
   b) Iron Pipe – Nom 12 in. (305 mm) diam (or smaller) cast or ductile iron pipe.

4. **Pipe Covering*** – Max 2 in. (51 mm) thick hollow cylindrical heavy density glass fiber units jacketed on the outside with an all service jacket. Longitudinal joints sealed with metal fasteners or factory-applied self-sealing lap tape. Transverse joints secured with metal fasteners or with butt tape supplied with the product. The annular space between the insulated pipe and periphery of opening shall be min 1/2 in. (13 mm) to max 3/4 in. (19 mm).
   See **Pipe and Equipment Covering – Materials** (BRGU) category in the Building Materials Directory for names of manufactures. Any pipe covering material meeting the above specifications and bearing the UL Classification Marking with a Flame Spread Index of 25 or less and a Smoke Development Index of 50 or less may be used.
   The hourly F Rating of the firestop system is 2 Hr when 2 in. (51 mm) thick pipe covering is used. The hourly F Rating of the firestop system is 0 Hr when pipe covering is less than 2 in. (51 mm) thick.

5. **Firestop System** – The firestop system shall consist of the following:
   a) Packing Material – Min 4 in. (102 mm) thickness of min 4 pcf (64 kg/m3) density mineral wool batt insulation firmly packed into opening as a permanent form. Packing material to be recessed from top surface of floor or both surfaces of wall to accommodate the required thickness of fill material.
   b) Fill, Void or Cavity Material* – Sealant – Min 1/2 in. (13 mm) thickness of sealant applied within the annulus, flush with top surface of the floor or with both surfaces of wall.

GRABBER CONSTRUCTION PRODUCTS INC – GrabberGard IFC

*** Bearing the UL Classification Marking**

Underwriters Laboratories Inc.

FL0712

System No. C-AJ-8142

F Rating - 2 Hr
T Rating - 0 Hr

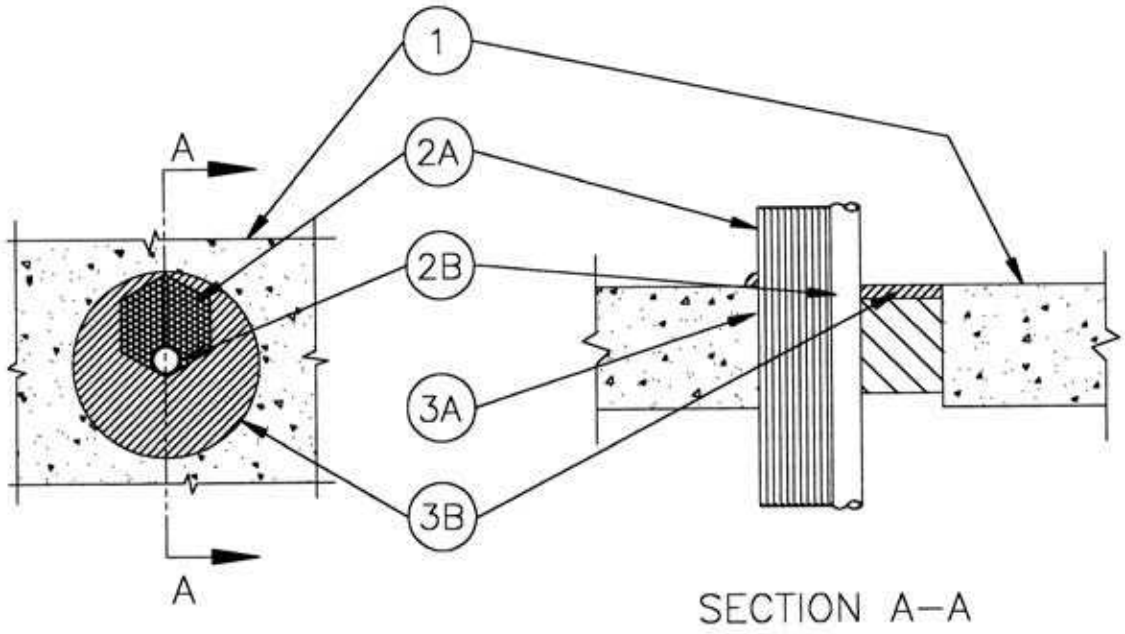

1. **Floor or Wall Assembly** – Min 5 in. thick lightweight or normal weight (100-150 pcf) concrete. Wall may also be constructed of any UL Classified **Concrete Blocks***. Max diam of opening is 10-1/4 in.
   See **Concrete Blocks** (CAZT) category in the Fire Resistance Directory for names of manufacturers.

2. **Through Penetrants** – Pipes, conduits or cables to be bundled within the opening such that the aggregate cross-sectional area of penetrants in opening to be max 27 percent of the cross-sectional area of the opening in floor or wall. The space between penetrants and periphery of opening shall be min 0 in. (point contact) to max 3-1/2 in. Penetrants to be rigidly supported on both sides of floor or wall assembly. The following types and sizes of penetrants may be used:
   - **a) Metallic Pipes** – The following types and sizes of metallic pipes, conduits or tubing may be used:
     - **a1) Steel Pipe** – Nom 2 in. diam (or smaller) Schedule 5 (or heavier) steel pipe.
     - **a2) Conduit** – Nom 2 in. diam (or smaller) steel electrical metallic tubing or steel conduit.
   - **b) Cables** – Any combination of the following types and sizes of cables may be used:
     - **b1)** 1/C 750 kcmil (or smaller) copper conductor polyvinyl chloride (PVC) jacketed aluminum clad or steel clad TEK cable with cross-linked polyethylene (XLPE) insulation.
     - **b2)** 3/C 350 kcmil (or smaller) copper conductor PVC jacketed aluminum clad or steel clad TEK cable with XLPE insulation.
     - **b3)** 4/C No. 14 AWG (or smaller) copper conductor PVC jacketed aluminum clad or steel clad TEK cable with XLPE insulation.
     - **b4)** Max 25 pair No. 20 AWG (and smaller) copper conductor PVC jacketed cable with PVC insulation.
     - **b5)** 1/C 400 kcmil (or smaller) aluminum or copper conductor cable with XLPE insulation.
     - **b6)** 4/C No. 6 AWG (or smaller) copper conductor PVC jacketed cable with XLPE insulation.

C-AJ-8142

3. **Firestop System** – The firestop system shall consist of the following:

a) **Packing Material** – Min 3-1/2 in. thickness of min 4 pcf mineral wool batt insulation firmly packed into opening as a permanent form. Packing material to be recessed from top surface of floor or from both surfaces of wall as required to accommodate the required thickness of fill material (Item 3B).

a) **Fill, Void or Cavity Material* – Sealant** – Min 1/2 in. thickness of fill material applied within annulus, flush with top surface of floor or both surfaces of wall. Sealant to be forced into interstices of penetrants to max extent possible.

GRABBER CONSTRUCTION PRODUCTS INC – GrabberGard IFC

***Bearing the UL Classification Marking**

System No. C-AJ-8145

F Rating - 2 Hr
T Rating - 0 Hr

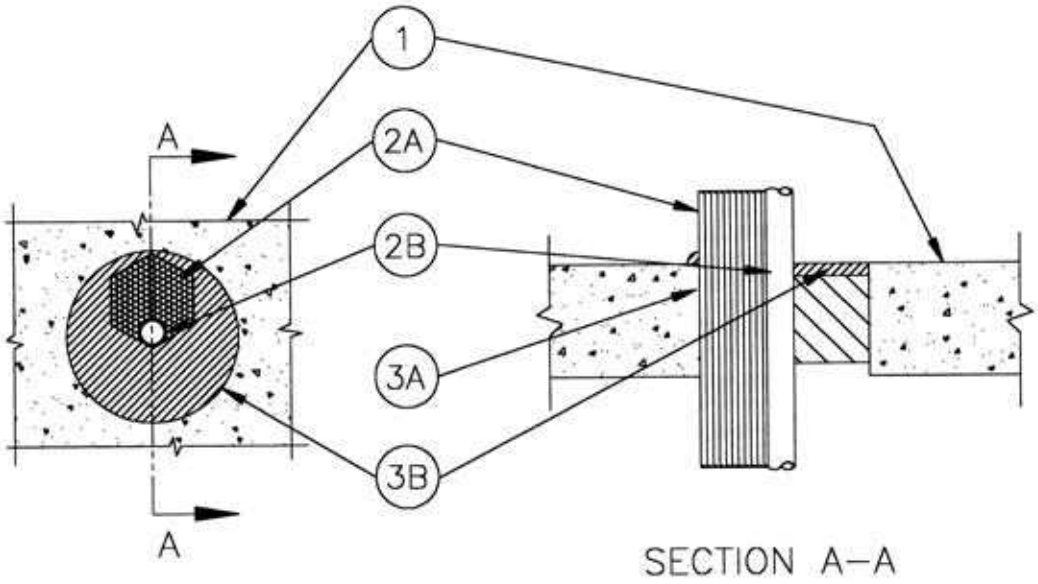

1. **Floor or Wall Assembly** – Min 5 in. thick lightweight or normal weight (100-150 pcf) concrete. Wall may also be constructed of any UL Classified **Concrete Blocks***. Max diam of opening is 10-1/4 in.
   See **Concrete Blocks** (CAZT) category in the Fire Resistance Directory for names of manufacturers.

2. **Through Penetrants** – Pipes, conduits or cables to be bundled within the opening such that the aggregate cross-sectional area of penetrants in opening to be max 27 percent of the cross-sectional area of the opening in floor or wall. The space between penetrants and periphery of opening shall be min 0 in. (point contact) to max 3-1/2 in. Penetrants to be rigidly supported on both sides of floor or wall assembly. The following types and sizes of penetrants may be used:
   - **a) Metallic Pipes** – The following types and sizes of metallic pipes, conduits or tubing may be used:
     - **a1) Steel Pipe** – Nom 2 in. diam (or smaller) Schedule 5 (or heavier) steel pipe.
     - **a2) Conduit** – Nom 2 in. diam (or smaller) steel electrical metallic tubing or steel conduit.
   - **b) Cables** – Any combination of the following types and sizes of cables may be used:
     - **b1)** 1/C 750 kcmil (or smaller) copper conductor polyvinyl chloride (PVC) jacketed aluminum clad or steel clad TEK cable with cross-linked polyethylene (XLPE) insulation.
     - **b2)** 3/C 350 kcmil (or smaller) copper conductor PVC jacketed aluminum clad or steel clad TEK cable with XLPE insulation.
     - **b3)** 4/C No. 14 AWG (or smaller) copper conductor PVC jacketed aluminum clad or steel clad TEK cable with XLPE insulation.
     - **b4)** Max 25 pair No. 20 AWG (and smaller) copper conductor PVC jacketed cable with PVC insulation.
     - **b5)** 1/C 400 kcmil (or smaller) aluminum or copper conductor cable with XLPE insulation.
     - **b4)** 4/C No. 6 AWG (or smaller) copper conductor PVC jacketed cable with XLPE insulation.

C-AJ-8145

3. **Firestop System** – The firestop system shall consist of the following:

a) **Packing Material** – Min 3-1/2 in. thickness of min 4 pcf mineral wool batt insulation firmly packed into opening as a permanent form. Packing material to be recessed from top surface of floor or from both surfaces of wall as required to accommodate the required thickness of fill material (Item 3B).

b) **Fill, Void or Cavity Material* – Sealant** – Min 1/2 in. thickness of fill material applied within annulus, flush with top surface of floor or both surfaces of wall. Sealant to be forced into interstices of penetrants to max extent possible.

GRABBER CONSTRUCTION PRODUCTS INC – GrabberGard EFC

***Bearing the UL Classification Marking**

System No. F-A-1058

L Rating at Ambient – Less than 1 CFM/ sq. ft.
L Rating at 400°F – Less than 1 CFM/sq. ft.
F Rating – 2 Hr
T Rating – 1/4 & 1/2 Hr (See Item 2)

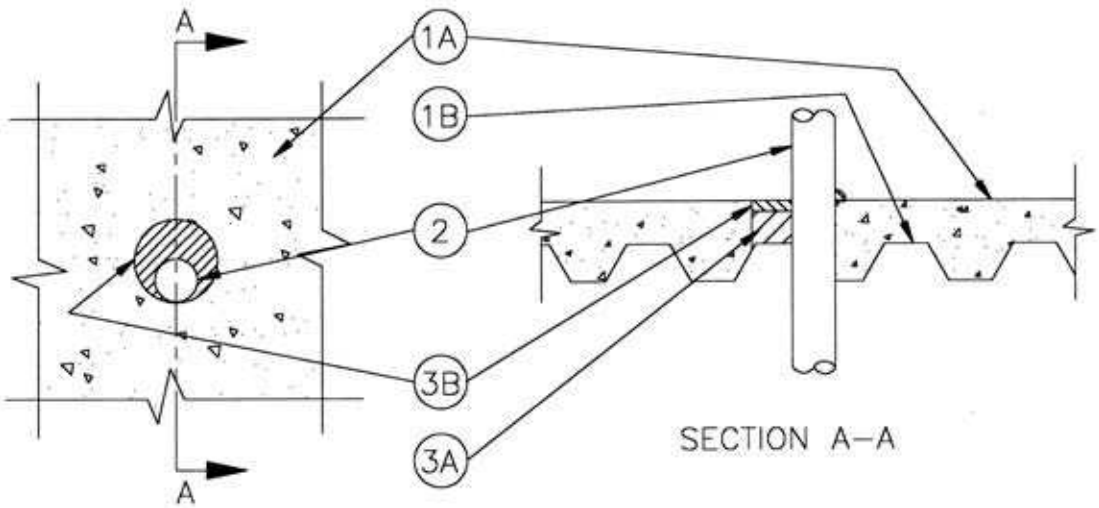

1. **Floor Assembly** – The fire-rated unprotected concrete and steel floor assembly shall be constructed of the materials and in the manner specified in the individual D900 Series designs in the UL Fire Resistance Directory and as summarized below:
   - **a) Concrete** – Min 2 in. thick reinforced lightweight or normal weight (100-150 pcf) concrete.
   - **b) Steel Floor and Form Units*** – Composite or non-composite max 3 in. deep galv fluted units as specified in the individual Floor-Ceiling Design. Max diam of opening is 6 in.
2. **Through Penetrants** – One metallic pipe, conduit or tubing to be installed either concentrically or eccentrically within the firestop system. The annular space between pipe, conduit or tubing and edge of through opening shall be min 0 in. (point contact) to max 1-7/8 in. Pipe, conduit or tubing to be rigidly supported on both sides of floor or assembly. The following types and sizes of metallic pipes, conduits or tubing may be used:
   - **a) Steel Pipe** – Nom 4 in. diam (or smaller) Schedule 10 (or heavier) steel pipe.
   - **b) Iron Pipe** – Nom 4 in. diam (or smaller) cast or ductile iron pipe.
   - **c) Conduit** – Nom 4 in. diam (or smaller) steel electrical metallic tubing (EMT) or steel conduit.
   - **d) Copper Tubing** – Nom 4 in. diam (or smaller) Type L (or heavier) copper tubing.
   - **e) Copper Pipe** – Nom 4 in. diam (or smaller) Regular (or heavier) copper pipe.

   T rating is 1/2 hour for pipes/conduits A, B, and C. T rating is 1/4 hour for pipes/tubing D and E.
3. **Firestop System** – The firestop system shall consist of the following:
   - **a) Packing Material** – Min 1-1/2 in. thickness of min 4 pcf density mineral wool batt insulation firmly packed into opening as a permanent form. Packing material to be recessed from top surface of floor as to accommodate the required thickness of fill material (Item 3B).
   - **b) Fill Void or Cavity Material*** – Sealant – Min 1/2 in. thickness of fill material applied within annulus, flush with top surface of floor. At point contact location between penetrant and concrete, a min 1/2 in. diam bead of fill material shall be applied at the concrete/penetrant interface on top surface of floor.

GRABBER CONSTRUCTION PRODUCTS INC – GrabberGard IFC

***Bearing the UL Classification Marking**

FL0712

Underwriters Laboratories Inc.

System No. F-A-1060

F Rating – 2 Hr

T Rating – 1/4 & 1/2 Hr (See Item 2)

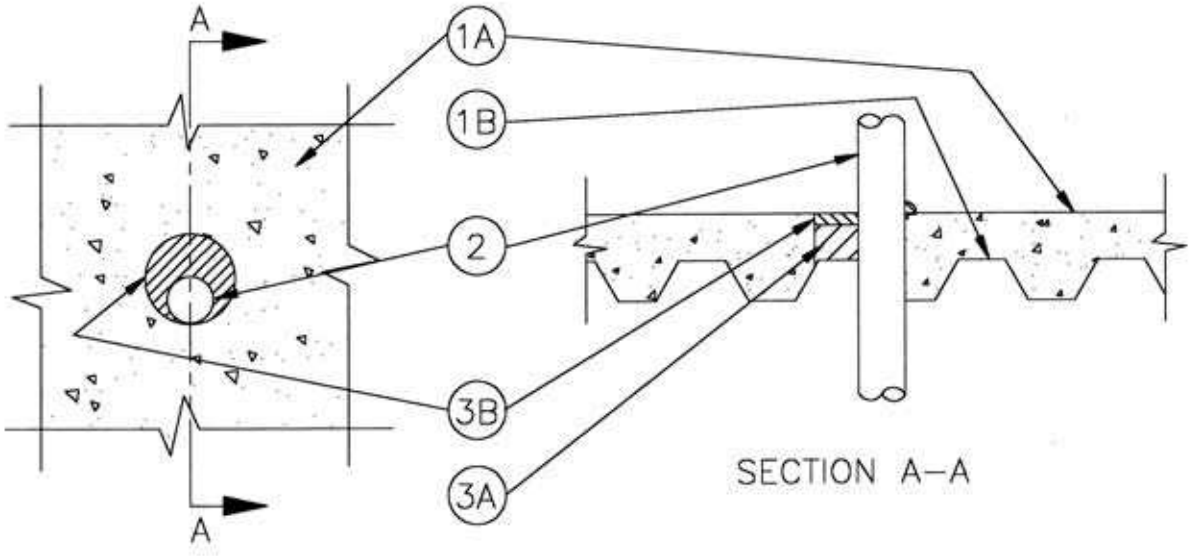

1. **Floor Assembly** – The fire-rated unprotected concrete and steel floor assembly shall be constructed of the materials and in the manner specified in the individual D900 Series designs in the UL Fire Resistance Directory and as summarized below:
   - **a) Concrete** – Min 2 in. thick reinforced lightweight or normal weight (100-150 pcf) concrete.
   - **b) Steel Floor and Form Units*** – Composite or non-composite max 3 in. deep galv fluted units as specified in the individual Floor-Ceiling Design. Max diam of opening is 6 in.
2. **Through Penetrants** – One metallic pipe, conduit or tubing to be installed either concentrically or eccentrically within the firestop system. The annular space between pipe, conduit or tubing and edge of through opening shall be min 0 in. (point contact) to max 1-7/8 in. Pipe, conduit or tubing to be rigidly supported on both sides of floor or assembly. The following types and sizes of metallic pipes, conduits or tubing may be used:
   - **a) Steel Pipe** – Nom 4 in. diam (or smaller) Schedule 10 (or heavier) steel pipe.
   - **b) Iron Pipe** – Nom 4 in. diam (or smaller) cast or ductile iron pipe.
   - **c) Conduit** – Nom 4 in. diam (or smaller) rigid steel conduit or steel electrical metallic tubing.
   - **d) Copper Tubing** – Nom 4 in. diam (or smaller) Type L (or heavier) copper tubing.
   - **d) Copper Pipe** – Nom 4 in. diam (or smaller) Regular (or heavier) copper pipe.

   T rating is 1/2 hour for pipes/conduits A, B, and C. T rating is 1/4 hour for pipes/tubing D and E.
3. **Firestop System** – The firestop system shall consist of the following:
   - **a) Packing Material** – Min 1-1/2 in. thickness of min 4 pcf density mineral wool batt insulation firmly packed into opening as a permanent form. Packing material to be recessed from top surface of floor as to accommodate the required thickness of fill material (Item 3B).
   - **b) Fill Void or Cavity Material* – Sealant** – Min 1/2 in. thickness of fill material applied within annulus, flush with top surface of floor. At point contact location between penetrant and concrete, a min 1/2 in. diam bead of fill material shall be applied at the concrete/penetrant interface on top surface of floor.

GRABBER CONSTRUCTION PRODUCTS INC – GrabberGard EFC

***Bearing the UL Classification Marking**

System No. F-A-2121

F Rating – 2 Hr
T Rating – 2 Hr

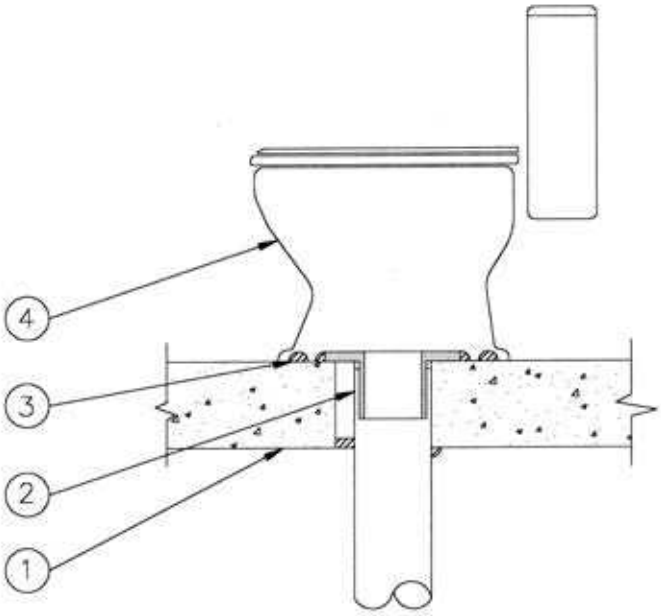

1. **Floor Assembly** – Min 4-1/2 in. thick lightweight or normal weight concrete (100-150 pcf). Max diam of opening is 6 in.
2. **Nonmetallic Pipe** – One nonmetallic drain pipe with max 4 in. diam toilet flange installed either concentrically or eccentrically within the firestop system. The annular space between drain pipe and periphery of opening shall be min 0 in. (point contact) to max 1-1/2 in. Pipe to be rigidly supported on lower side of floor assembly. The following types and sizes of nonmetallic pipes, fittings and flanges may be used:
   a) **Polyvinyl Chloride (PVC) Pipe** – Nom 4 in. diam (or smaller) Schedule 40 solid core or cellular core PVC pipe for use in vented (drain, waste or vent) piping system.
   b) **Acrylonitrile Butadiene Styrene (ABS) Pipe** – Nom 4 in. diam (or smaller) Schedule 40 cellular core or solid core ABS pipe for use in vented (drain, waste or vent) piping systems.
3. **Fill, Void or Cavity Material* – Sealant** – Min 1 in. thickness of fill material applied within the annulus, flush with bottom surface of floor. At point contact location between concrete and pipe, a min 1/2 in diam bead of fill material shall be applied at the pipe/concrete interface on bottom surface of floor assembly. A min 1/2 in. diam bead of fill material shall be applied around top edge of toilet flange. Prior to placement of water closet, a min 1/2 in. diam bead of fill material shall be applied to the bottom surface of the outer rim of the water closet.

GRABBER CONSTRUCTION PRODUCTS INC – GrabberGard IFC

Water Closet – Floor mounted vitreous china water closet.
***Bearing the UL Classification Marking**

System No. F-A-2126

F Rating – 2 Hr

T Rating – 2 Hr

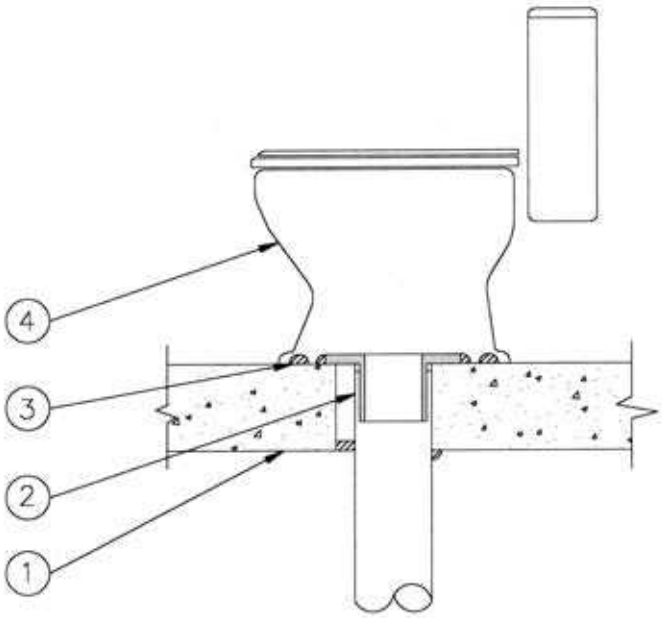

1 **Floor Assembly** – Min 4-1/2 in. thick lightweight or normal weight concrete (100-150 pcf). Max diam of opening is 6 in.

2. **Nonmetallic Pipe** – One nonmetallic drain pipe with max 4 in. diam toilet flange installed either concentrically or eccentrically within the firestop system. The annular space between drain pipe and periphery of opening shall be min 0 in. (point contact) to max 1-1/2 in. Pipe to be rigidly supported on lower side of floor assembly. The following types and sizes of nonmetallic pipes, fittings and flanges may be used:

   a) **Polyvinyl Chloride (PVC) Pipe** – Nom 4 in. diam (or smaller) Schedule 40 solid core or cellular core PVC pipe for use in vented (drain, waste or vent) piping system.

   b) **Acrylonitrile Butadiene Styrene (ABS) Pipe** – Nom 4 in. diam (or smaller) Schedule 40 cellular core or solid core ABS pipe for use in vented (drain, waste or vent) piping systems.

3. **Fill, Void or Cavity Material* – Sealant** – Min 1 in. thickness of fill material applied within the annulus, flush with bottom surface of floor. At point contact location between concrete and pipe, a min 1/2 in diam bead of fill material shall be applied at the pipe/concrete interface on bottom surface of floor assembly. A min 1/2 in. diam bead of fill material shall be applied around top edge of toilet flange. Prior to placement of water closet, a min 1/2 in. diam bead of fill material shall be applied to the bottom surface of the outer rim of the water closet.

GRABBER CONSTRUCTION PRODUCTS INC – GrabberGard EFC

Water Closet – Floor mounted vitreous china water closet.
***Bearing the UL Classification Marking**

System No. F-A-7013

F Rating – 2 Hr
T Rating – 1/2 Hr

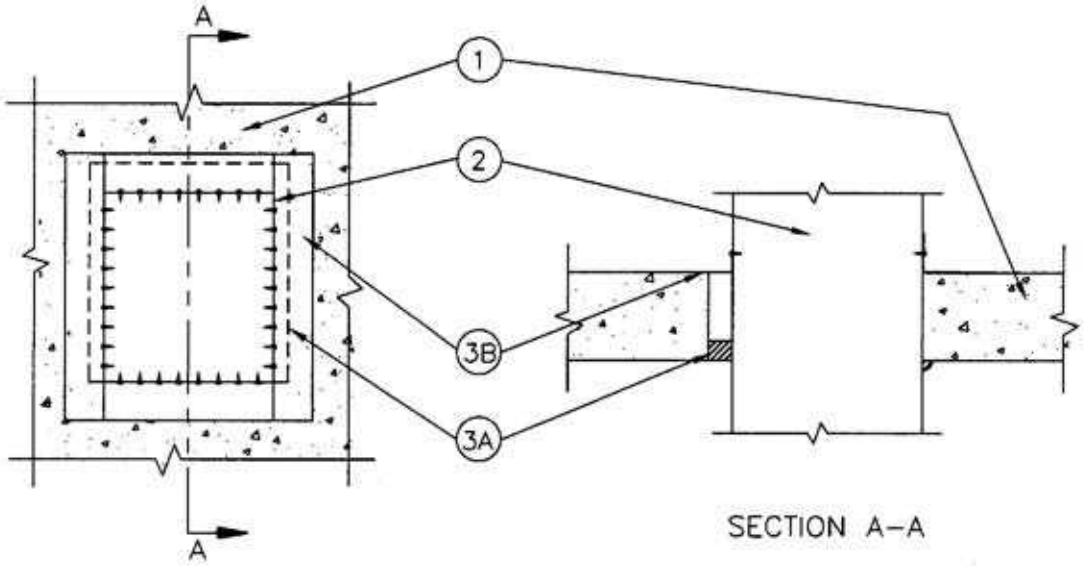

1. **Floor Assembly** – Min 4-1/2 in. thick reinforced lightweight or normal weight (100-150 pcf) concrete. Max area of opening is 625 sq in. with a max dimension of 25 in.

2. **Through Penetrant** – Nom 24 by 24 in. (or smaller) 26 ga. (or heavier) square steel duct to be installed either concentrically or eccentrically within the firestop system. An annular space of min 0 in. (point contact) to max 1 in. Duct to be rigidly supported on top surface of floor assembly.

3. **Firestop System** – The firestop system shall consist of the following:

   a) **Fill, Void or Cavity Material*** – **Sealant** – Min 1 in. thickness of fill material applied within annulus, flush with bottom surface of floor. At the point contact location between penetrant and periphery of opening, min 1/2 in. diam bead of fill material shall be applied at the concrete/duct interface on exposed surface of floor.

   GRABBER CONSTRUCTION PRODUCTS INC – GrabberGard IFC

   b) **Retaining Angles** – Min 16 gauge 1-1/2 in. by 1-1/2 in. galv steel angles. Angles attached to duct on unexposed side of floor with min 1/2 in. long, No. 8 (or larger) sheet metal screws, spaced max 4 in. OC.

***Bearing the UL Classification Marking**

System No. F-A-7014

F Rating – 2 Hr
T Rating – 1/2 Hr

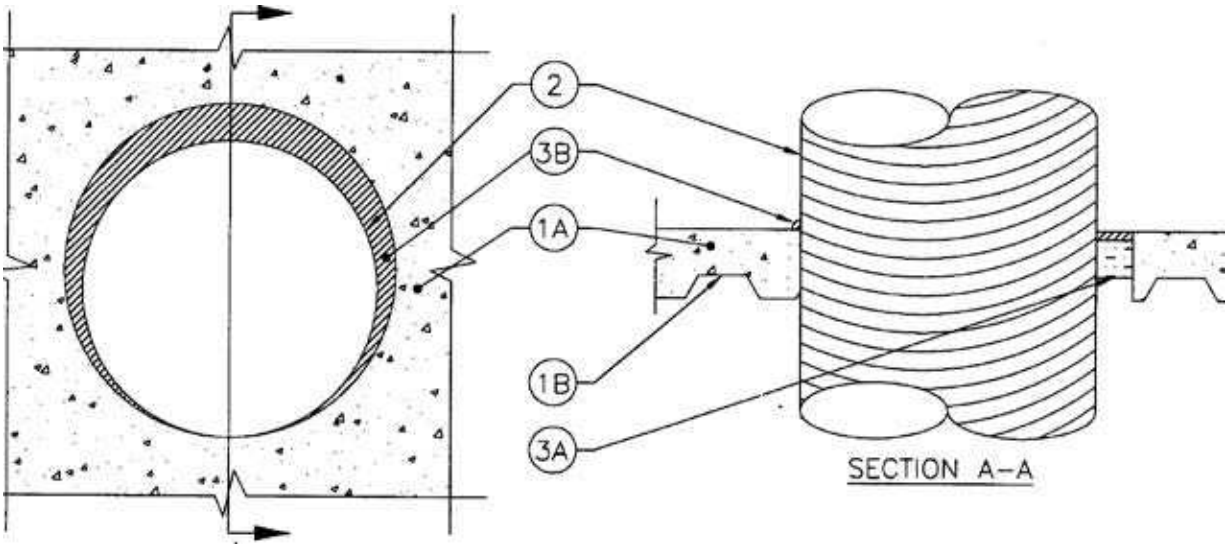

1. **Floor Assembly** – The fire-rated unprotected concrete and steel floor assembly shall be constructed of the materials and in the manner described in the individual D900 Series Floor -Ceiling Design in the UL Fire Resistance Directory and shall include the following construction features:
   - **a) Concrete** – Min 2-1/2 in. thick reinforced lightweight or normal weight (100-150 pcf) concrete.
   - **b) Steel Floor and Form Units*** – Composite or non-composite max 3 in. deep fluted galv units as specified in the individual Floor-Ceiling design. Max diam of opening is 18 in.
2. **Steel Duct** – Nom 16 in. diam (or smaller) No. 22 gauge (or heavier) spiral wound steel duct to be installed either concentrically or eccentrically within the firestop system. The annular space between the duct and the periphery of the opening shall be min. 0 in. (point contact) to max 2 in. Duct to be rigidly supported on both sides of floor assembly.
3. **Firestop System** – The firestop system shall consist of the following:
   - **a) Packing Material** – Min 2 in. thickness of min 4 pcf density mineral wool batt insulation firmly packed into opening as a permanent form. Packing material to be recessed form top surface of floor as required to accommodate required thickness of fill material.
   - **b) Fill, Void or Cavity Material* – Sealant** – Min 1/2 in. thickness of sealant applied within the annulus, flush with top surface of floor. Min 1/2 in. diam bead of sealant shall be applied at the duct/concrete interface at point contact location on the top surface of floor.

GRABBER CONSTRUCTION PRODUCTS INC – GrabberGard IFC

***Bearing the UL Classification Marking**

System No. F-A-7015

F Rating – 2 Hr
T Rating – 1/2 Hr

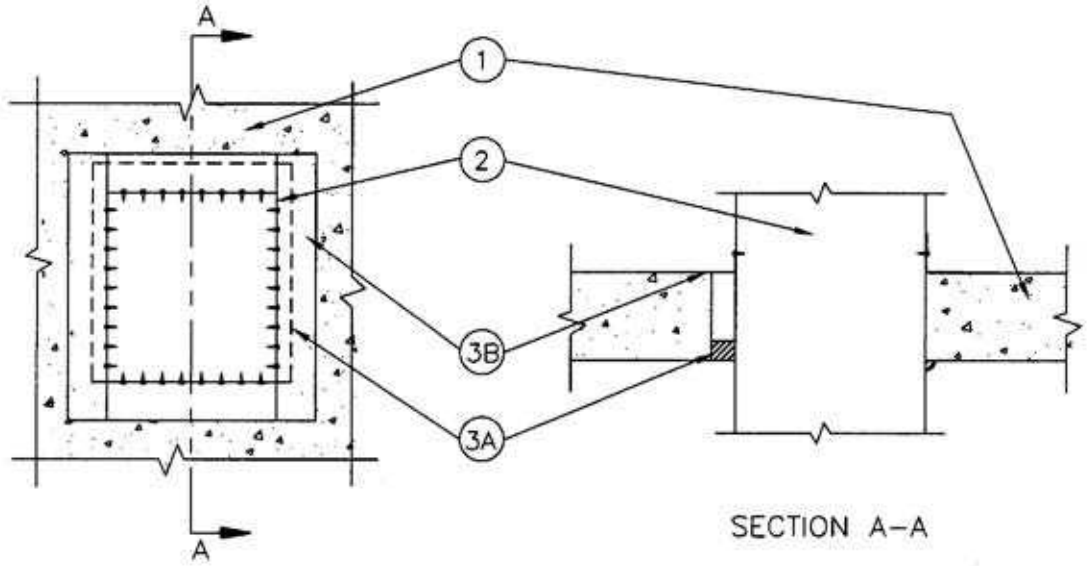

1. **Floor Assembly** – Min 4-1/2 in. thick reinforced lightweight or normal weight (100-150 pcf) concrete. Max area of opening is 625 sq in. with a max dimension of 25 in.

2. **Through Penetrant** – Nom 24 by 24 in. (or smaller) 26 ga. (or heavier) galv steel duct to be installed either concentrically or eccentrically within the firestop system. An annular space of min 0 in. (point contact) to max 1 in. Duct to be rigidly supported on top surface of floor assembly.

3. **Firestop System** – The firestop system shall consist of the following:

   a) **Fill, Void or Cavity Material* – Sealant** – Min 1 in. thickness of fill material applied within annulus, flush with bottom surface of floor. At the point contact location between penetrant and periphery of opening, min 1/2 in. diam bead of fill material shall be applied at the concrete/duct interface on exposed surface of floor.

   GRABBER CONSTRUCTION PRODUCTS INC – GrabberGard EFC

   b) **Retaining Angles** – Min 16 gauge 1-1/2 in. by 1-1/2 in. galv steel angles. Angles attached to duct on unexposed side of floor with min 1/2 in. long, No. 8 (or larger) sheet metal screws, spaced max 4 in. OC.

***Bearing the UL Classification Marking**

System No. F-A-7016

F Rating – 2 Hr
T Rating – 1/2 Hr

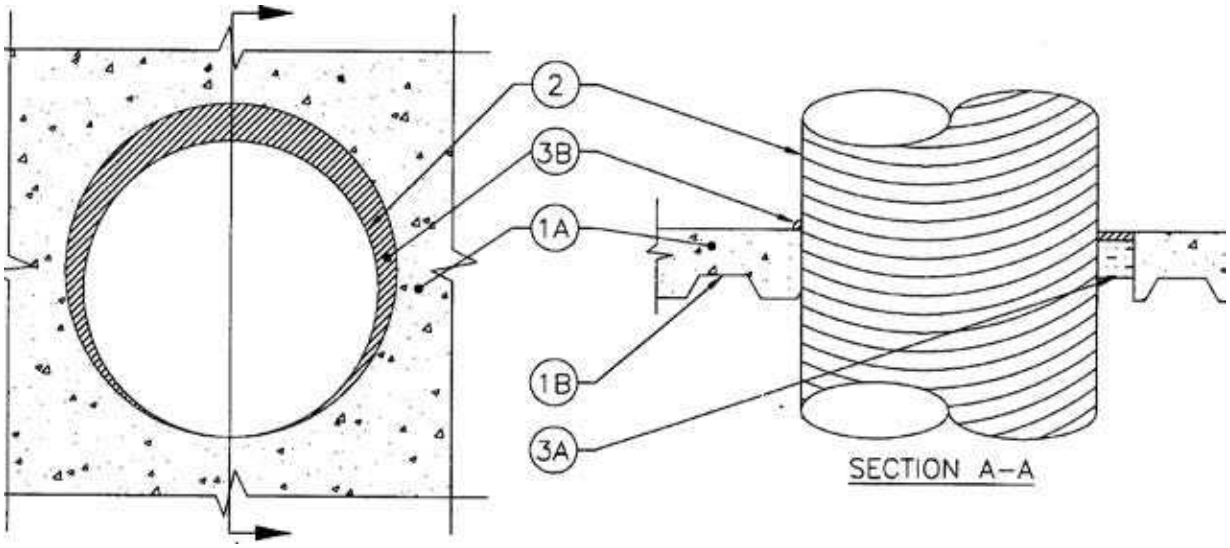

1. **Floor Assembly** – The fire-rated unprotected concrete and steel floor assembly shall be constructed of the materials and in the manner described in the individual D900 Series Floor -Ceiling Design in the UL Fire Resistance Directory and shall include the following construction features:
   - **a) Concrete** – Min 2-1/2 in. thick reinforced lightweight or normal weight (100-150 pcf) concrete.
   - **b) Steel Floor and Form Units*** – Composite or non-composite max 3 in. deep fluted galv units as specified in the individual Floor-Ceiling design. Max diam of opening is 18 in.
2. **Steel Duct** – Nom 16 in. diam (or smaller) No. 22 gauge (or heavier) spiral wound steel duct to be installed either concentrically or eccentrically within the firestop system. The annular space between the duct and the periphery of the opening shall be min. 0 in. (point contact) to max 2 in. Duct to be rigidly supported on both sides of floor assembly.
3. **Firestop System** – The firestop system shall consist of the following:
   - **a) Packing Material** – Min 2 in. thickness of min 4 pcf density mineral wool batt insulation firmly packed into opening as a permanent form. Packing material to be recessed form top surface of floor as required to accommodate required thickness of fill material.
   - **b) Fill, Void or Cavity Material* – Sealant** – Min 1/2 in. thickness of sealant applied within the annulus, flush with top surface of floor. Min 1/2 in. diam bead of sealant shall be applied at the duct/concrete interface at point contact location on the top surface of floor.

GRABBER CONSTRUCTION PRODUCTS INC – GrabberGard EFC

***Bearing the UL Classification Marking**

System No. F-C-1119

F Rating – 1 Hr
T Rating – 1/4 Hr

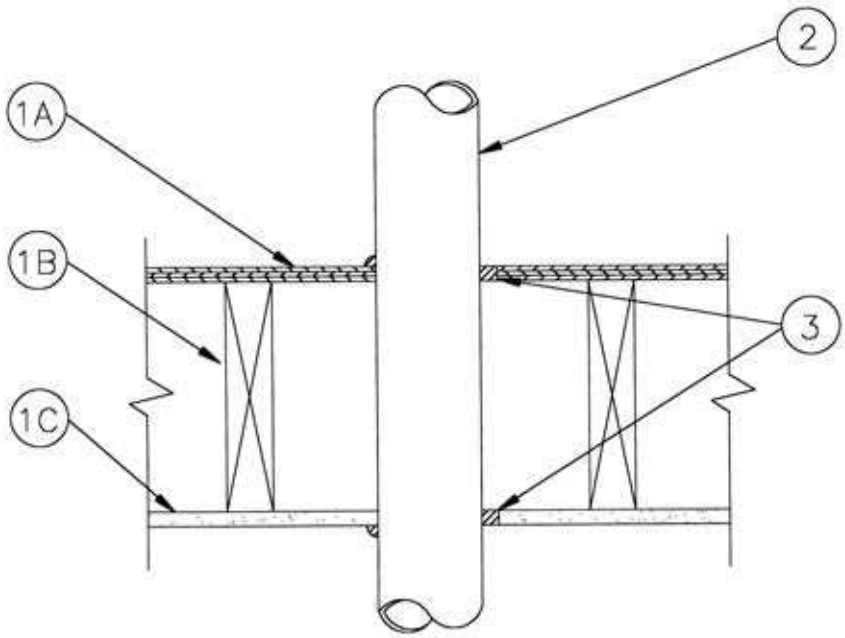

1. **Floor-Ceiling Assembly** – The fire rated wood truss or combination wood and steel truss Floor-Ceiling assembly shall be constructed of the materials and in the manner described in the individual L500 Series Design in the UL Fire Resistance Directory and shall include the following construction features:
   - a) **Flooring System** – Lumber of plywood subfloor with finish floor of lumber, plywood or **Floor Topping Mixture-*** as specified in the individual Floor-Ceiling Design. Max diam of floor opening is 5-1/8 in.
   - b) **Wood Joists*** – Nom 2 by 10 in. deep (or deeper) lumber joists spaced 16 in. OC with nom 1 by 3 in. lumber bridging and with ends firestopped or steel or combination lumber and steel joists, trusses or **Structural Wood Members*** with bridging as required and with ends firestopped.
   - c) **Gypsum Board** * – Nom 5/8 in. thick as specified in the individual Floor-Ceiling Design.
2. **Through Penetrants** – One metallic pipe, conduit or tubing to be installed concentrically or eccentrically within the firestop system, The annular space between pipe, conduit or tubing and periphery of opening shall be min 1/4 in. to max 3/4 in. Pipe, conduit or tubing to be rigidly supported on both sides of floor assembly. The following types and sizes of metallic pipe, conduit or tubing may be used:
   - a) **Steel Pipe** – Nom 4 in. diam (or smaller) Schedule 10 (or heavier) steel pipe.
   - b) **Conduit** – Nom 4 in. diam (or smaller) electrical metallic tubing (EMT) or steel conduit.
   - c) **Copper Tubing** – Nom 4 in. diam (or smaller) Type L (or heavier) copper tubing.
   - d) **Copper Pipe** – Nom 4 in. diam (or smaller) Regular (or heavier) copper pipe
   - e) **Iron Pipe** – Nom 4 in. diam (or smaller) service weight (or heavier) cast iron soil pipe, nom 4 in. (or smaller) or Class 50 (or heavier) ductile iron pressure pipe.
3. **Fill, Void or Cavity Material* – Sealant** – Min 3/4 in. thickness of fill material applied within the annulus, flush with top surface of floor. Min 5/8 in. applied within the annulus, flush with the surface of ceiling.

GRABBER CONSTRUCTION PRODUCTS INC – GrabberGard IFC

***Bearing the UL Classified Marking**

FL0712

Underwriters Laboratories Inc.®

System No. F-C-1122

F Rating – 1 Hr
T Rating – 1/4 Hr

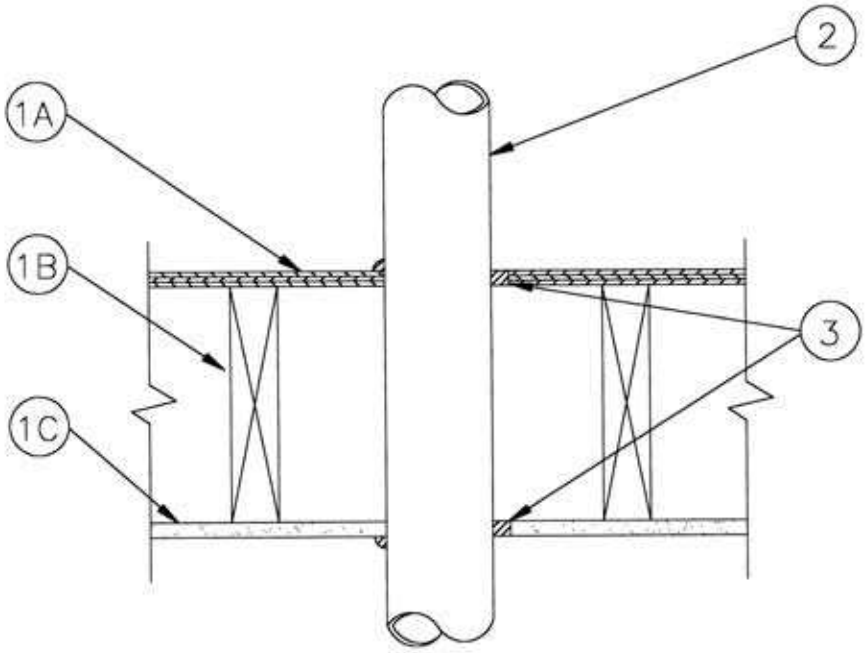

1. **Floor-Ceiling Assembly** – The fire rated wood truss or combination wood and steel truss Floor-Ceiling assembly shall be constructed of the materials and in the manner described in the individual L500 Series Design in the UL Fire Resistance Directory and shall include the following construction features:
   - **a) Flooring System** – Lumber of plywood subfloor with finish floor of lumber, plywood or Floor Topping Mixture-* as specified in the individual Floor-Ceiling Design. Max diam of floor opening is 5-1/8 in.
   - **b) Wood Joists*** – Nom 2 by 10 in. deep (or deeper) lumber joists spaced 16 in. OC with nom 1 by 3 in. lumber bridging and with ends firestopped or steel or combination lumber and steel joists, trusses or Structural Wood Members* with bridging as required and with ends firestopped.
   - **c) Gypsum Board** * – Nom 5/8 in. thick as specified in the individual Floor-Ceiling Design.
2. **Through Penetrants** – One metallic pipe, conduit or tubing to be installed concentrically or eccentrically within the firestop system, The annular space between pipe, conduit or tubing and periphery of opening shall be min 1/4 in. to max 3/4 in. Pipe, conduit or tubing to be rigidly supported on both sides of floor assembly. The following types and sizes of metallic pipe, conduit or tubing may be used:
   - **a) Steel Pipe** – Nom 4 in. diam (or smaller) Schedule 10 (or heavier) steel pipe.
   - **b) Conduit** – Nom 4 in. diam (or smaller) electrical metallic tubing (EMT) or steel conduit.
   - **c) Copper Tubing** – Nom 4 in. diam (or smaller) Type L (or heavier) copper tubing.
   - **d) Copper Pipe** – Nom 4 in. diam (or smaller) Regular (or heavier) copper pipe
   - **e) Iron Pipe** – Nom 4 in. diam (or smaller) service weight (or heavier) cast iron soil pipe, nom 4 in. (or smaller) or Class 50 (or heavier) ductile iron pressure pipe.
3. **Fill, Void or Cavity Material* – Sealant** – Min 3/4 in. thickness of fill material applied within the annulus, flush with top surface of floor. Min 5/8 in. applied within the annulus, flush with the surface of ceiling.

GRABBER CONSTRUCTION PRODUCTS INC – GrabberGard EFC

***Bearing the UL Classified Marking**

Underwriters Laboratories Inc.

FL0712

System No. F-C-2283

F Rating – 1 Hr
T Rating – 1 Hr

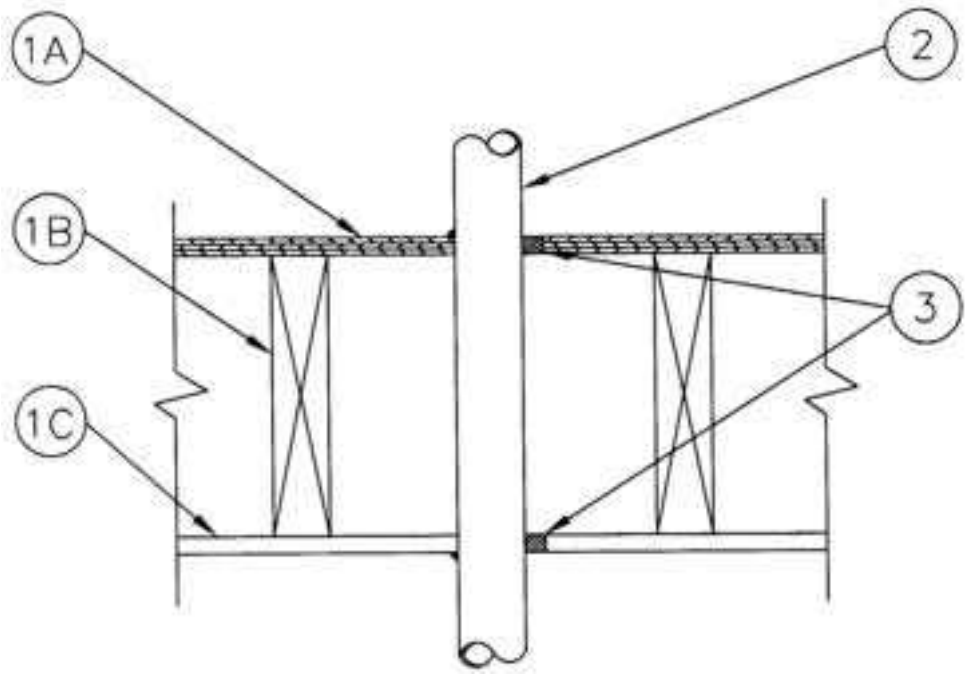

1. **Floor-Ceiling Assembly** – The fire rated wood truss or combination wood and steel truss Floor-Ceiling assembly shall be constructed of the materials and in the manner described in the individual L500 Series Design in the UL Fire Resistance Directory and shall include the following construction features:

   a) Flooring System – Lumber of plywood subfloor with finish floor of lumber, plywood or Floor Topping Mixture* as specified in the individual Floor-Ceiling Design. Max diam of floor opening is 3-1/8 in.

   b) Wood Joists* – Nom 2 by 10 in. deep (or deeper) lumber joists spaced 16 in. OC, with nom 1 by 3 in. lumber bridging and with ends firestopped or steel or combination lumber and steel joists, trusses or Structural Wood Members* with bridging as required and with ends firestopped.

   c) Gypsum Board* – Nom 5/8 in. thick as specified in the individual Floor-Ceiling Design. Max diam of opening is 3-1/8 in.

2. **Through Penetrant** – One non-metallic pipe or conduit to be installed either concentrically or eccentrically within the firestop system. The annular space between pipe and periphery of opening shall be min 0 in. (point contact) to max 7/8 in. Pipe to be rigidly supported on both sides of floor assembly.

   a) Chlorinated Polyvinyl Chloride (CPVC) Pipe – Nom 2 in. diam (or smaller) SDR 11 cellular or solid core chlorinated polyvinyl chloride (CPVC) pipe for use in closed (process or supply) piping systems.

   b) Polyvinyl Chloride (PVC) Pipe – Nom 2 in. diam (or smaller) Schedule 40 (or heavier) PVC pipe for use in closed (process or supply) piping systems.

   c) Rigid Nonmetallic Conduit+ – Nom 2 in. diam (or smaller) Schedule 40 PVC conduit installed in accordance with Article 347 of the National Electrical Code (NFPA No. 70).

3. **Fill, Void or Cavity Material* – Sealant** – Min 3/4 in. thickness of fill material applied within the annulus, flush with top surface of floor. Min 5/8 in. thickness of fill material applied within the annulus, flush with bottom surface of ceiling. Min 1/4 in. diam bead of fill material applied at the pipe/floor and pipe/ceiling interfaces at point contact locations on both sides of assembly.

GRABBER CONSTRUCTION PRODUCTS INC – GrabberGard IFC

***Bearing the UL Classification Marking**
+Bearing the UL Listing Mark

FL0712

Underwriters Laboratories Inc.®

System No. F-C-2287

F Rating – 1 Hr
T Rating – 1 Hr

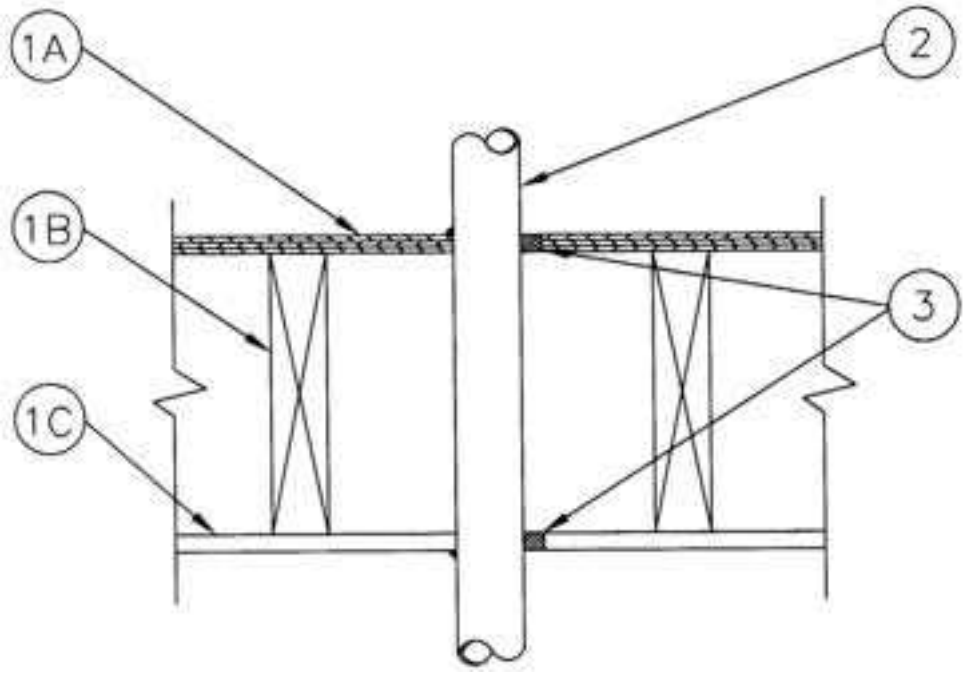

1. **Floor-Ceiling Assembly** – The fire rated wood truss or combination wood and steel truss Floor-Ceiling assembly shall be constructed of the materials and in the manner described in the individual L500 Series Design in the UL Fire Resistance Directory and shall include the following construction features:
   - **a) Flooring System** – Lumber of plywood subfloor with finish floor of lumber, plywood or Floor Topping Mixture* as specified in the individual Floor-Ceiling Design. Max diam of floor opening is 3-1/8 in.
   - **b) Wood Joists*** – Nom 2 by 10 in. deep (or deeper) lumber joists spaced 16 in. OC, with nom 1 by 3 in. lumber bridging and with ends firestopped or steel or combination lumber and steel joists, trusses or Structural Wood Members* with bridging as required and with ends firestopped.
   - **c) Gypsum Board*** – Nom 5/8 in. thick as specified in the individual Floor-Ceiling Design. Max diam of opening is 3-1/8 in.
2. **Through Penetrant** – One non-metallic pipe or conduit to be installed either concentrically or eccentrically within the firestop system. The annular space between pipe and periphery of opening shall be min 0 in. (point contact) to max 7/8 in. Pipe to be rigidly supported on both sides of floor assembly.
   - **a) Chlorinated Polyvinyl Chloride (CPVC) Pipe** – Nom 2 in. diam (or smaller) SDR 11 cellular or solid core chlorinated polyvinyl chloride (CPVC) pipe for use in closed (process or supply) piping systems.
   - **b) Polyvinyl Chloride (PVC) Pipe** – Nom 2 in. diam (or smaller) Schedule 40 (or heavier) PVC pipe for use in closed (process or supply) piping systems.
   - **c) Rigid Nonmetallic Conduit+** – Nom 2 in. diam (or smaller) Schedule 40 PVC conduit installed in accordance with Article 347 of the National Electrical Code (NFPA No. 70).
3. **Fill, Void or Cavity Material* – Sealant** – Min 3/4 in. thickness of fill material applied within the annulus, flush with top surface of floor. Min 5/8 in. thickness of fill material applied within the annulus, flush with bottom surface of ceiling. Min 1/4 in. diam bead of fill material applied at the penetrant/floor and penetrant/ceiling interfaces at point contact locations on both sides of assembly.

GRABBER CONSTRUCTION PRODUCTS INC – GrabberGard EFC

***Bearing the UL Classification Marking**
+Bearing the UL Listing Mark

System No. F-C-3079

F Rating – 1 Hr
T Rating – 1 Hr

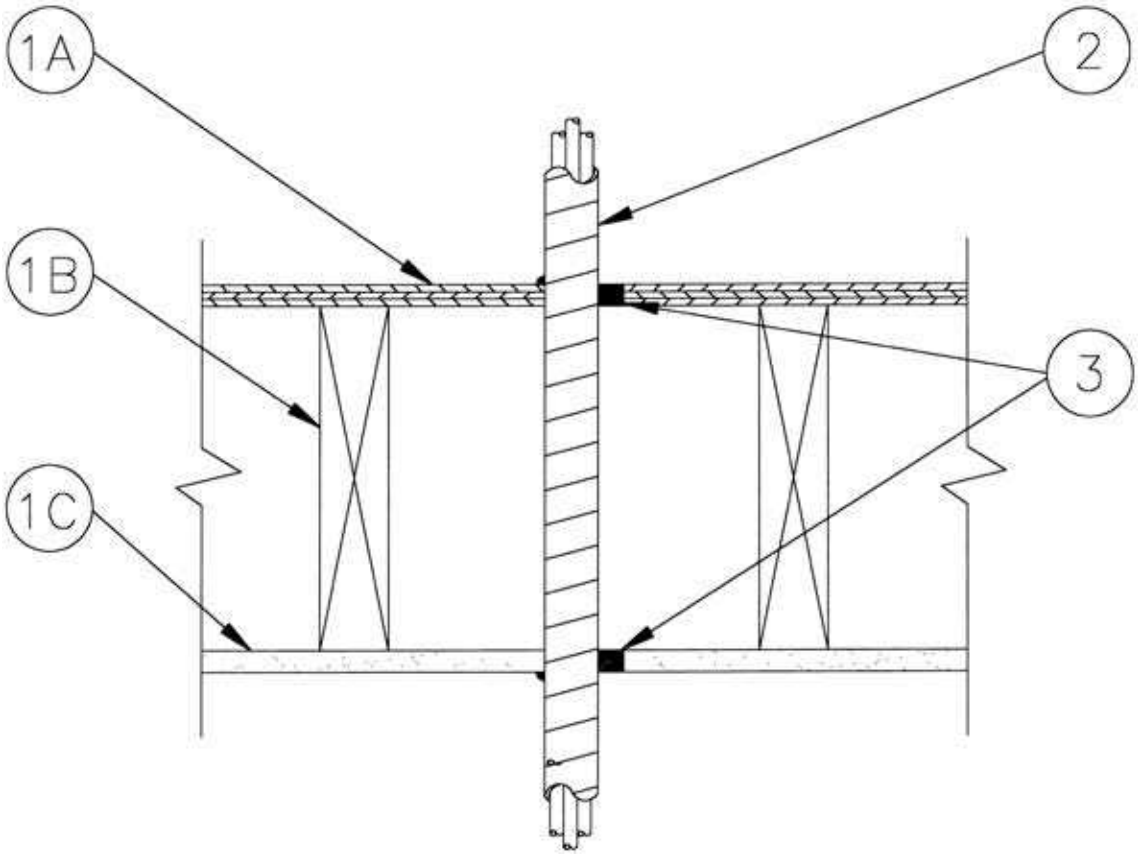

1. **Floor-Ceiling Assembly** – The 1 hr fire rated wood truss or combination wood and steel truss floor-ceiling assembly shall be constructed of the materials and in the manner described in the individual L500 Series Design in the UL Fire Resistance Directory and shall include the following construction features:
   - **a) Flooring System** – Lumber of plywood subfloor with finish floor of lumber, plywood or **Floor Topping Mixture*** as specified in the individual **Floor-Ceiling Design**. Max diam of opening is 5-1/8 in.
   - **b) Wood Joists*** – Nom 2 by 10 in. deep (or deeper) lumber joists spaced 16 in. OC with nom 1 by 3 in. lumber bridging and with ends firestopped or steel or combination lumber and steel joists, trusses or **Structural Wood Members*** with bridging as required and with ends firestopped.
   - **c) Gypsum Board*** – Nom 5/8 in. thick as specified in the individual Floor-Ceiling Design. Max diam of opening is 5-1/8 in.
2. **Cables** – Max 3/C No. 3/0 AWG with 1 No. 8 AWG bare copper ground, aluminum-clad or steel-clad TEK cable, with or without polyvinyl chloride jacket to be installed concentrically or eccentrically within the firestop. The annular space between cable and periphery of opening shall be min 0 in. (point contact) to max 3/4 in. Cable to be rigidly supported on both sides of assembly.
3. **Fill, Void or Cavity Material* – Sealant** – Min 3/4 in. thickness of fill material applied within the annulus, flush with top surface of floor. Min 5/8 in. thickness of fill material applied within the annulus, flush with bottom surface of ceiling. Min 1/4 in. diam bead of fill material shall be applied at the cable/floor and cable/ceiling interfaces at point contact locations on both sides of assembly.

GRABBER CONSTRUCTION PRODUCTS INC – GrabberGard IFC

***Bearing the UL Classified Marking**

FL0712

Underwriters Laboratories Inc.®

System No. F-C-3080

F Rating – 1 Hr
T Rating – 1 Hr

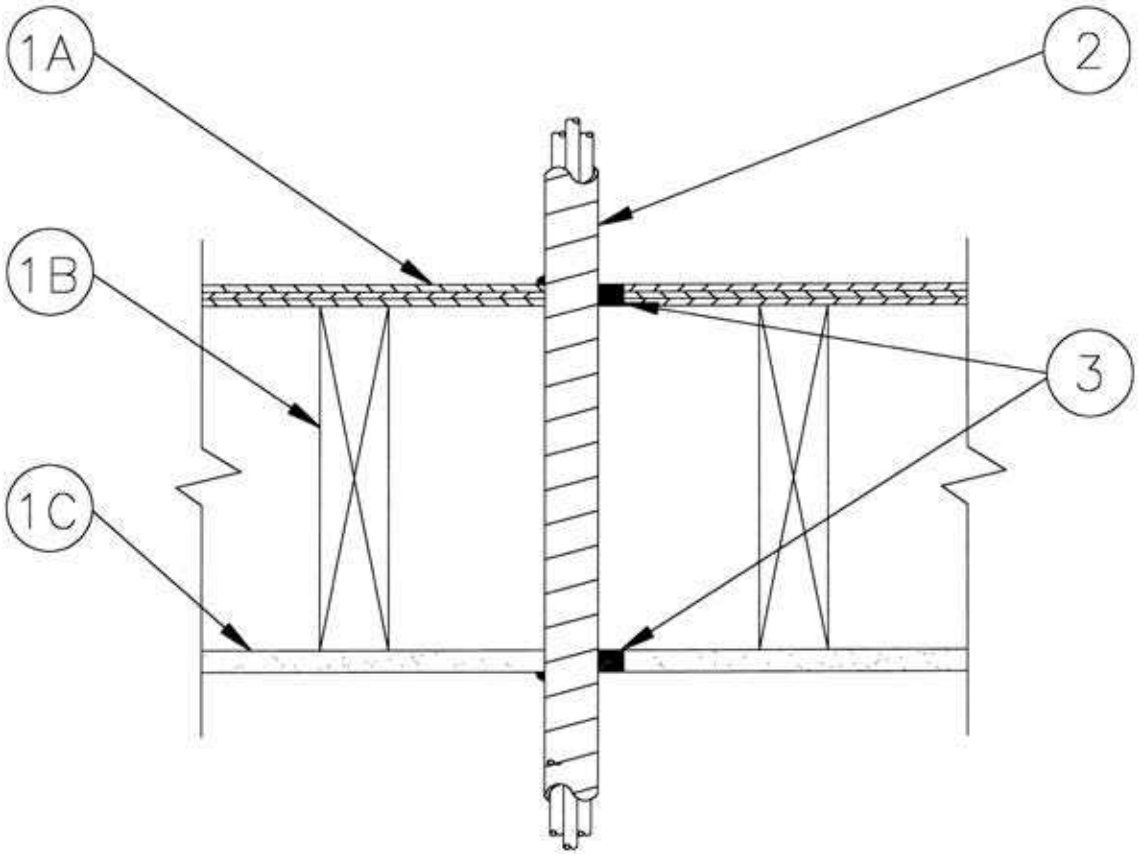

1. **Floor-Ceiling Assembly** – The 1 hr fire rated wood truss or combination wood and steel truss floor-ceiling assembly shall be constructed of the materials and in the manner described in the individual L500 Series Design in the UL Fire Resistance Directory and shall include the following construction features:
   - **a) Flooring System** – Lumber of plywood subfloor with finish floor of lumber, plywood or **Floor Topping Mixture*** as specified in the individual Floor-Ceiling Design. Max diam of opening is 5-1/8 in.
   - **b) Wood Joists*** – Nom 2 by 10 in. deep (or deeper) lumber joists spaced 16 in. OC with nom 1 by 3 in. lumber bridging and with ends firestopped or steel or combination lumber and steel joists, trusses or **Structural Wood Members*** with bridging as required and with ends firestopped.
   - **c) Gypsum Board*** – Nom 5/8 in. thick as specified in the individual Floor-Ceiling Design. Max diam of opening is 5-1/8 in.
2. **Cables** – Max 3/C No. 3/0 AWG with 1 No. 8 AWG bare copper ground, aluminum-clad or steel-clad TEK cable, with or without polyvinyl chloride PVC jacket. The annular space between cable and periphery of opening shall be min 0 in. (point contact) to max 3/4 in. Cable to be rigidly supported on both side of wall.
3. **Fill, Void or Cavity Material* – Sealant** – Min 3/4 in. thickness of fill material applied within the annulus, flush with top surface of floor. Min 5/8 in. thickness of fill material applied within the annulus, flush with bottom surface of ceiling. Min 1/4 in. diam bead of fill material shall be applied at the cable/floor and cable/ceiling interfaces at point contact locations on both sides of assembly.

GRABBER CONSTRUCTION PRODUCTS INC – GrabberGard EFC

***Bearing the UL Classified Marking**

Underwriters Laboratories Inc.

FL0712

System No. W-J-1153

F Ratings – 1, 2, 3 and 4 Hr (Item 1)

T Ratings – 0 & 1/4 Hr (See Item 2)

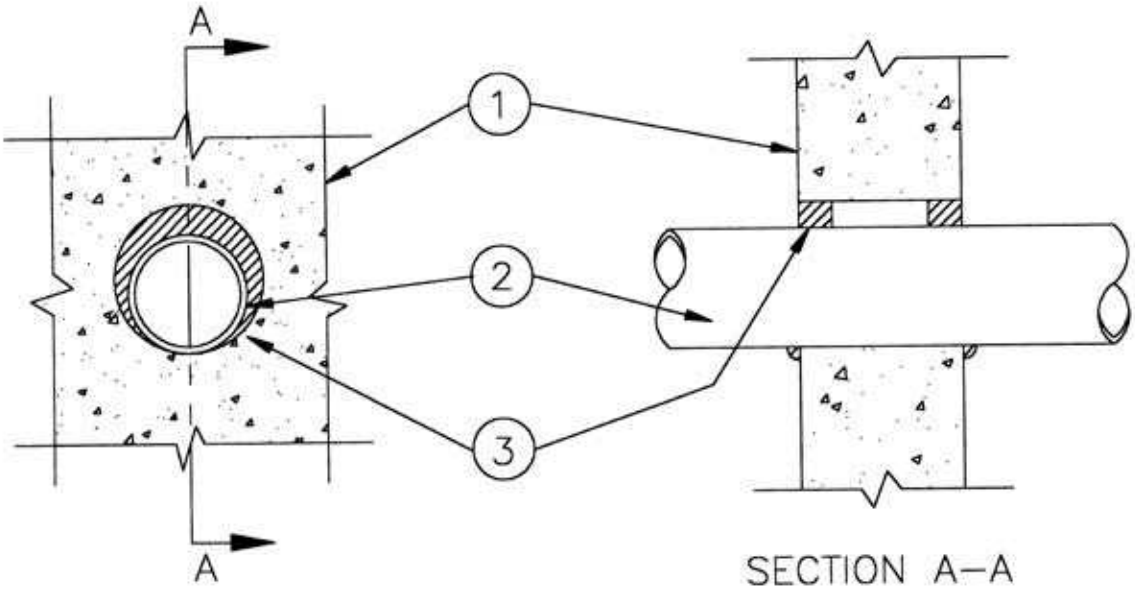

1. **Wall Assembly** – Min 4-7/8, 6-1/8, 7-3/8, 8-5/8 in. thick normal weight or lightweight (100-150 pcf) concrete for 1, 2, 3, 4 hr rated assemblies, respectively. Wall may also be constructed of any UL **Classified Concrete Blocks***. Max diam of opening is 14-1/8 in.

   See **Concrete Blocks** (CAZT) category in the Fire Resistance Directory for names of manufacturers.

   The hourly F Rating of the firestop system is equal to the hourly fire rating of the wall assembly in which it is installed.

2. **Through Penetrants** – One metallic pipe, conduit or tubing installed either concentrically or eccentrically within the firestop system. The annular space between pipe, conduit or tubing and periphery of opening shall be min 0 in. to max 1-3/8 in. Pipe, conduit or tubing to be rigidly supported on both sides of wall assembly. The following types and sizes of metallic pipes, conduits or tubing may be used:

   a) Steel Pipe – The following types and sizes of steel pipes may be used:
   - **a1)** Nom 4 in. diam (or smaller) Schedule 7 (or heavier) steel pipe.
   - **a2)** Nom 8 in. diam (or smaller) Schedule 10 (or heavier) steel pipe.
   - **a3)** Nom 10 in. diam (or smaller) Schedule 20 (or heavier) steel pipe.

   When steel pipe is used, T Rating is 1/4 hr for nom 4 in. diam (or smaller) and 0 hr for steel pipes greater than nom 4 in. diam.

   b) Iron Pipe – Nom 4 in. diam (or smaller) cast or ductile iron pipe. When iron pipe is used T Rating is 1/4 hr.

   c) Conduit – Nom 4 in. diam (or smaller) steel electrical metallic tubing (EMT). When EMT is used T Rating is 1/4 hr.

   d) Copper Tubing – Nom 4 in. diam (or smaller) Type L (or heavier) copper tubing. When copper tube is used T Rating is 0 hr.

   e) Copper Pipe – Nom 4 in. diam (or smaller) Regular (or heavier) copper pipe. When copper pipe is used T Rating is 0 hr.

3. **Fill, Void or Cavity Material* – Sealant** – Min 5/8 in. thickness of sealant for 1 rated wall assembly, and min 1 in. thickness of sealant for 2, 3 and 4 hr rated wall assemblies, applied within the annulus, flush with both surfaces of wall. At point contact location between penetrant and periphery of opening, a min 1/2 in. diam bead of fill material shall be installed at the concrete/penetrant interface on both surfaces of wall.

GRABBER CONSTRUCTION PRODUCTS INC – GrabberGard IFC

***Bearing the UL Classification Marking**

System No. W-J-1157

F Ratings – 1, 2, 3 and 4 Hr (Item 1)

T Ratings – 0 & 1/4 Hr (See Item 2)

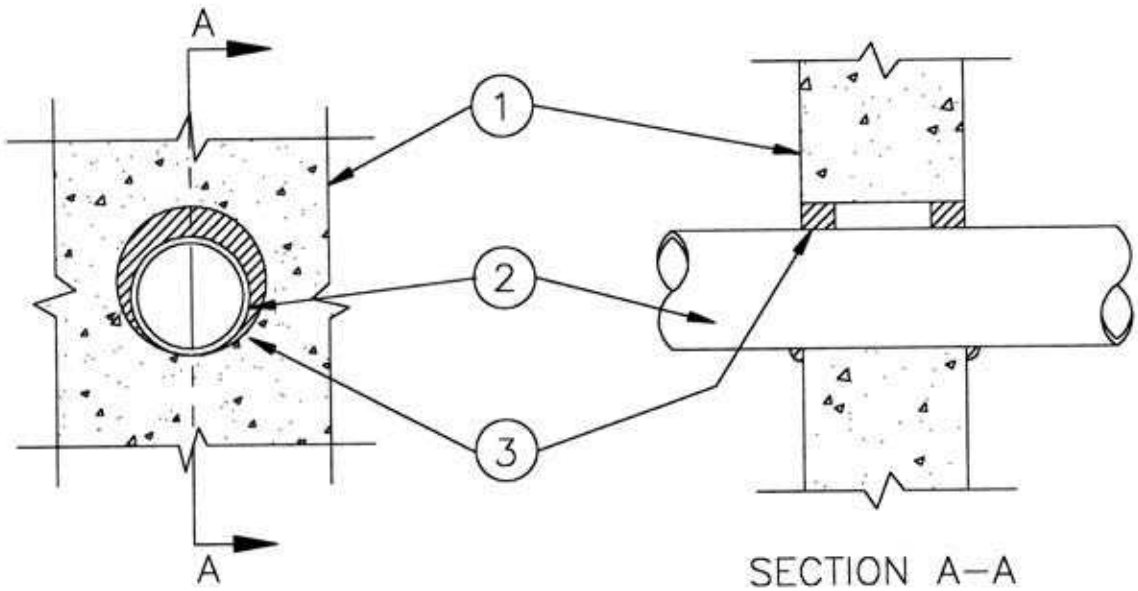

1. **Wall Assembly** – Min 4-7/8, 6-1/8, 7-3/8, 8-5/8 in. thick normal weight or lightweight (100-150 pcf) concrete for 1, 2, 3, 4 hr rated assemblies, respectively. Wall may also be constructed of any UL **Classified Concrete Blocks***. Max diam of opening is 14-1/8 in.

   See **Concrete Blocks** (CAZT) category in the Fire Resistance Directory for names of manufacturers.

   The F Rating of the firestop system is equal to the hourly fire rating of the wall assembly in which it is installed.

2. **Through Penetrants** – One metallic pipe, conduit or tubing installed either concentrically or eccentrically within the firestop system. The annular space between pipe, conduit or tubing and periphery of opening shall be min 0 in. to max 1-3/8 in. Pipe, conduit or tubing to be rigidly supported on both sides of wall assembly. The following types and sizes of metallic pipes, conduits or tubing may be used:

   a) Steel Pipe – The following types and sizes of steel pipes may be used:
   - **a1)** Nom 4 in. diam (or smaller) Schedule 7 (or heavier) steel pipe.
   - **a2)** Nom 8 in. diam (or smaller) Schedule 10 (or heavier) steel pipe.
   - **a3)** Nom 10 in. diam (or smaller) Schedule 20 (or heavier) steel pipe.

   When steel pipe is used, T Rating is 1/4 hr for nom 4 in. diam (or smaller) and 0 hr for steel pipes greater than nom 4 in. diam.

   b) Iron Pipe – Nom 4 in. diam (or smaller) cast or ductile iron pipe. When iron pipe is used T Rating is 1/4 hr.

   c) Conduit – Nom 4 in. diam (or smaller) steel electrical metallic tubing (EMT). When EMT is used T Rating is 1/4 hr.

   d) Copper Tubing – Nom 4 in. diam (or smaller) Type L (or heavier) copper tubing. When copper tube is used T Rating is 0 hr.

   e) Copper Pipe – Nom 4 in. diam (or smaller) Regular (or heavier) copper pipe. When copper pipe is used T Rating is 0 hr.

3. **Fill, Void or Cavity Material* – Sealant** – Min 5/8 in. thickness of sealant for 1 rated wall assembly, and min 1 in. thickness of sealant for 2, 3 and 4 hr rated wall assemblies, applied within the annulus, flush with both surfaces of wall. At point contact location between penetrant and periphery of opening, a min 1/2 in. diam bead of fill material shall be installed at the concrete/penetrant interface on both surfaces of wall.

GRABBER CONSTRUCTION PRODUCTS INC – GrabberGard EFC

***Bearing the UL Classification Marking**

System No. W-J-2149

F Rating – 1, 2, 3 & 4 Hr (See Item 1)

T Rating – 1, 2, 3 & 4 Hr

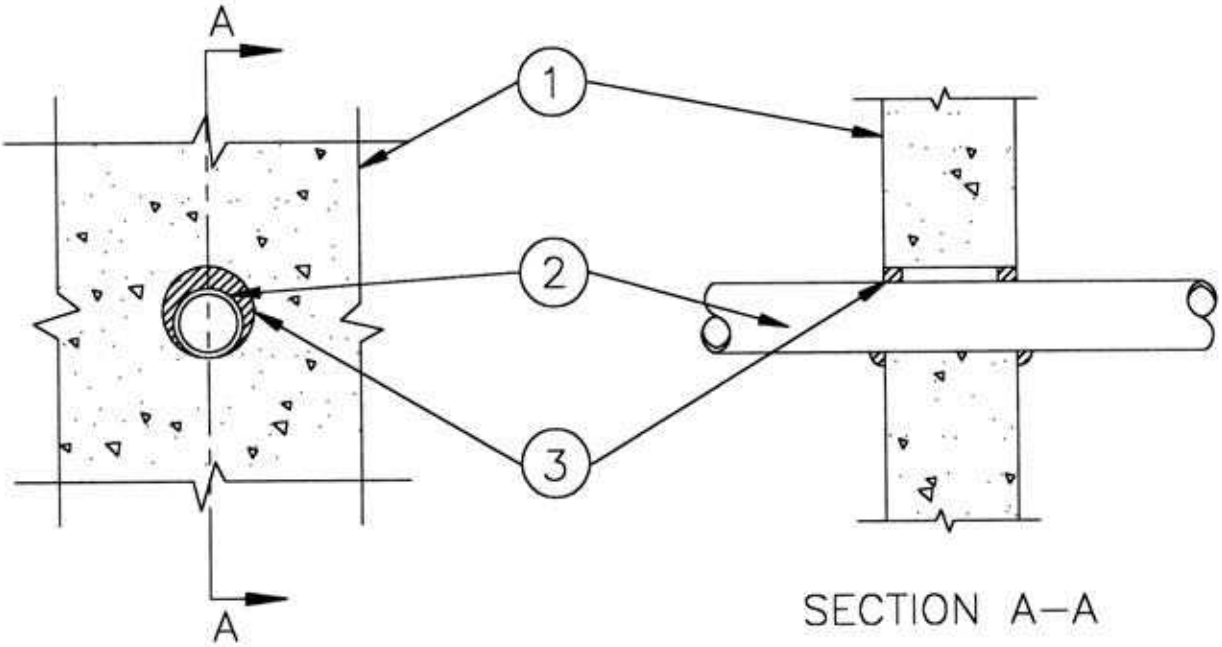

1. **Wall Assembly** – Min 4-7/8, 6-1/8, 7-3/8 or 8-5/8 in. thick lightweight or normal weight (100- 150 pcf) concrete for 1, 2, 3 or 4 hour rated wall assemblies, respectively. Wall may also be constructed of any UL Classified Concrete Blocks. Max diam of opening is 3-1/8 in.

   See **Concrete Blocks** (CAZT) category in the Fire Resistance Directory for names of manufacturers.

   The F and T Ratings of the firestop system is equal to the hourly fire rating of the wall assembly in which it is installed

2. **Through Penetrants** – One nonmetallic pipe or tubing installed either concentrically or eccentrically within the firestop system. The annular space between pipe and periphery of opening shall be min 0 in. to max 7/8 in. Pipe or tubing to be rigidly supported on both sides of wall assembly. The following types and sizes of nonmetallic pipes or tubing may be used:

   a) Chlorinated Polyvinyl Chloride (CPVC) Pipe – Nom 2 in. diam (or smaller) SDR 11 CPVC pipe for use in closed (process or supply) piping systems.

   b) Polyvinyl Chloride (PVC) Pipe – Nom 2 in. diam (or smaller) Schedule 40 (or heavier) cellular or solid core PVC pipe for use in closed (process or supply) piping systems.

   c) Crosslinked Polyethylene (PEX) Tubing – Nom 3/4 in. diam (or smaller) SDR 9 PEX tubing for use in closed (process or supply) piping systems.

3. **Fill, Void or Cavity Material* – Sealant** – Min 5/8 in. thickness for 1 hr rated wall assemblies and 1 in. thickness of fill material for 2, 3 or 4 hr rated wall assemblies, respectively, applied within the annulus, flush with both surfaces of wall. At point contact location between penetrant and periphery of opening, a min 1/2 in. diam bead of fill material shall be applied at the concrete/penetrant interface on both surfaces of wall.

GRABBER CONSTRUCTION PRODUCTS INC – GrabberGard IFC

***Bearing the UL Classification Marking**

System No. W-J-2153

F Rating – 1, 2, 3 & 4 Hr (See Item 1)

T Rating – 1, 2, 3 & 4 Hr

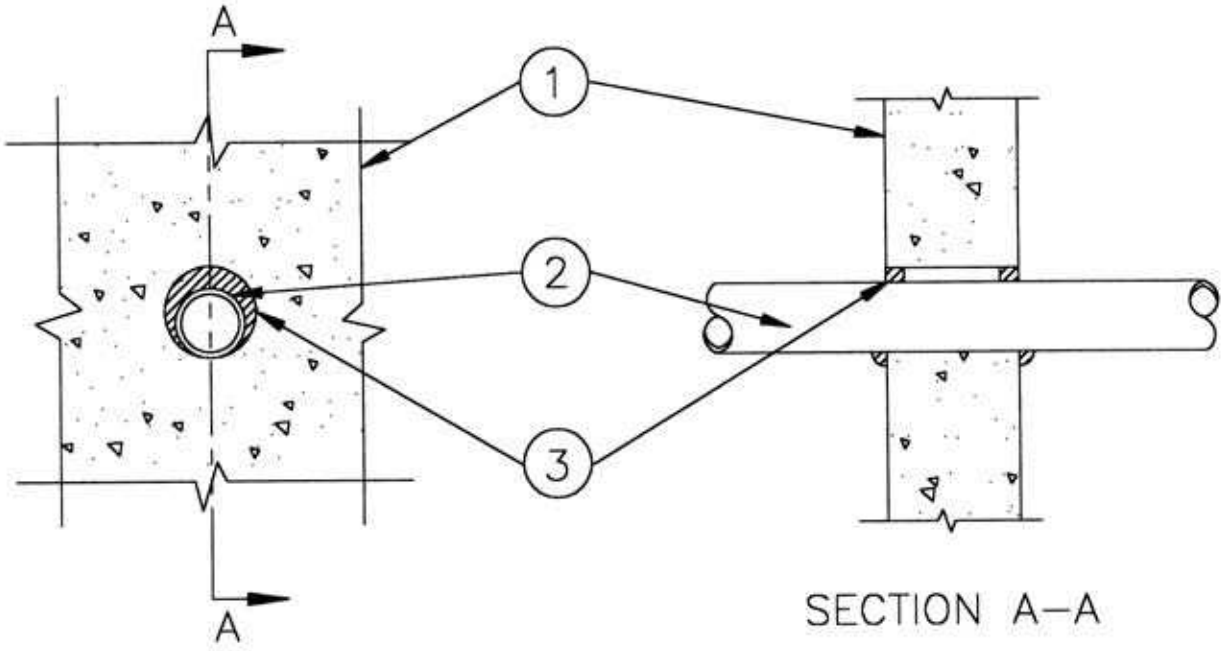

1. **Wall Assembly** – Min 4-7/8, 6-1/8, 7-3/8 or 8-5/8 in. thick lightweight or normal weight (100- 150 pcf) concrete for 1, 2, 3 or 4 hour rated wall assemblies, respectively. Wall may also be constructed of any UL Classified Concrete Blocks. Max diam of opening is 3-1/8 in.

   See **Concrete Blocks** (CAZT) category in the Fire Resistance Directory for names of manufacturers.

   The F and T Ratings of the firestop system is equal to the hourly fire rating of the wall assembly in which it is installed

2. **Through Penetrants** – One nonmetallic pipe or tubing installed either concentrically or eccentrically within the firestop system. The annular space between pipe and periphery of opening shall be min 0 in. to max 7/8 in. Pipe or tubing to be rigidly supported on both sides of wall assembly. The following types and sizes of nonmetallic pipes or tubing may be used:

   a) Chlorinated Polyvinyl Chloride (CPVC) Pipe – Nom 2 in. diam (or smaller) SDR 11 CPVC pipe for use in closed (process or supply) piping systems.

   b) Polyvinyl Chloride (PVC) Pipe – Nom 2 in. diam (or smaller) Schedule 40 (or heavier) cellular or solid core PVC pipe for use in closed (process or supply) piping systems.

   c) Crosslinked Polyethylene (PEX) Tubing – Nom 3/4 in. diam (or smaller) SDR 9 PEX tubing for use in closed (process or supply) piping systems.

4. **Fill, Void or Cavity Material* – Sealant** – Min 5/8 in. thickness for 1 hr rated wall assemblies and 1 in. thickness of fill material for 2, 3 or 4 hr rated wall assemblies, respectively, applied within the annulus, flush with both surfaces of wall. At point contact location between penetrant and periphery of opening, a min 1/2 in. diam bead of fill material shall be applied at the concrete/penetrant interface on both surfaces of wall.

GRABBER CONSTRUCTION PRODUCTS INC – GrabberGard EFC

***Bearing the UL Classification Marking**

System No. W-J-3121

F Rating – 1 & 2 Hr (See Item 1)

T Rating – 3/4 Hr

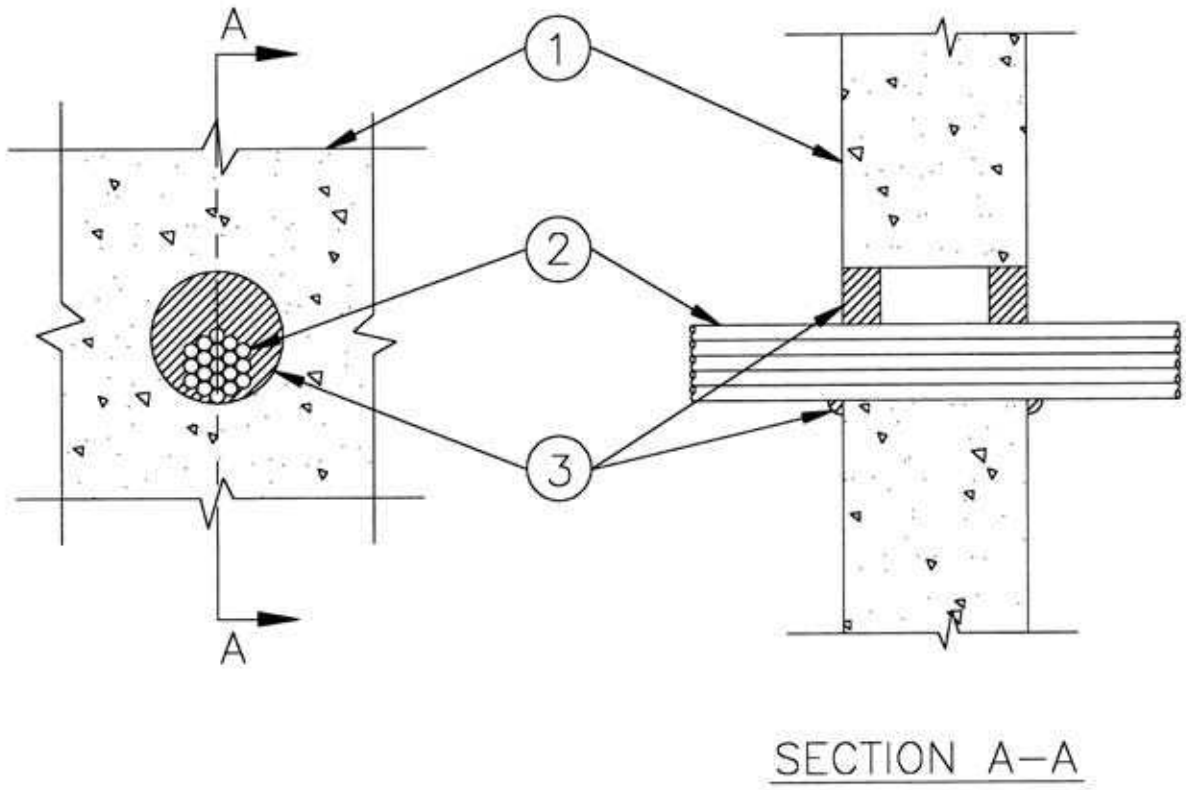

1. **Wall Assembly** – Min 4-7/8 or 6-1/8 in. thick lightweight or normal weight (100-150 pcf) concrete for 1 or 2 hr rated assemblies, respectively. Wall may also be constructed of any UL Classified Concrete Blocks*. Max diam of opening is 3-1/8 in.
   See **Concrete Blocks** (CAZT) category in the Fire Resistance Directory for names of manufacturers.

2. **Cables** – Aggregate cross-sectional area of cable in opening to be max 44 percent of the cross-sectional area of the opening. The annular space between cables and periphery shall be min 0 in. (point contact) to max 1-1/2 in. Cables to be rigidly supported on both sides of floor or wall assembly. Any combination of the following types and sizes of copper conductor cables may be used:
   a) 3/C No. 3/0 (or smaller) copper conductor polyvinyl chloride (PVC) jacketed aluminum clad or steel clad TEK cable with XLPE insulation.
   b) 2/C No. 10 AWG (or smaller) copper conductor PVC cable with XLPE insulation.

3. **Fill, Void or Cavity Material* – Sealant** – Min 5/8 or 1-1/4 in. thickness of fill material for 1 or 2 hr rated wall assemblies, respectively, applied within the annulus, flush with both surfaces of wall. Sealant to be forced into interstices of cable group to max extent possible. At the point contact location between cable(s) and concrete, a min 1/2 in. diam bead of fill material shall be applied at the concrete/cable interface on both surfaces of wall.

GRABBER CONSTRUCTION PRODUCTS INC – GrabberGard IFC

***Bearing the UL Classification Marking**

System No. W-J-3123

F Rating – 1 & 2 Hr (See Item 1)

T Rating – 3/4 Hr

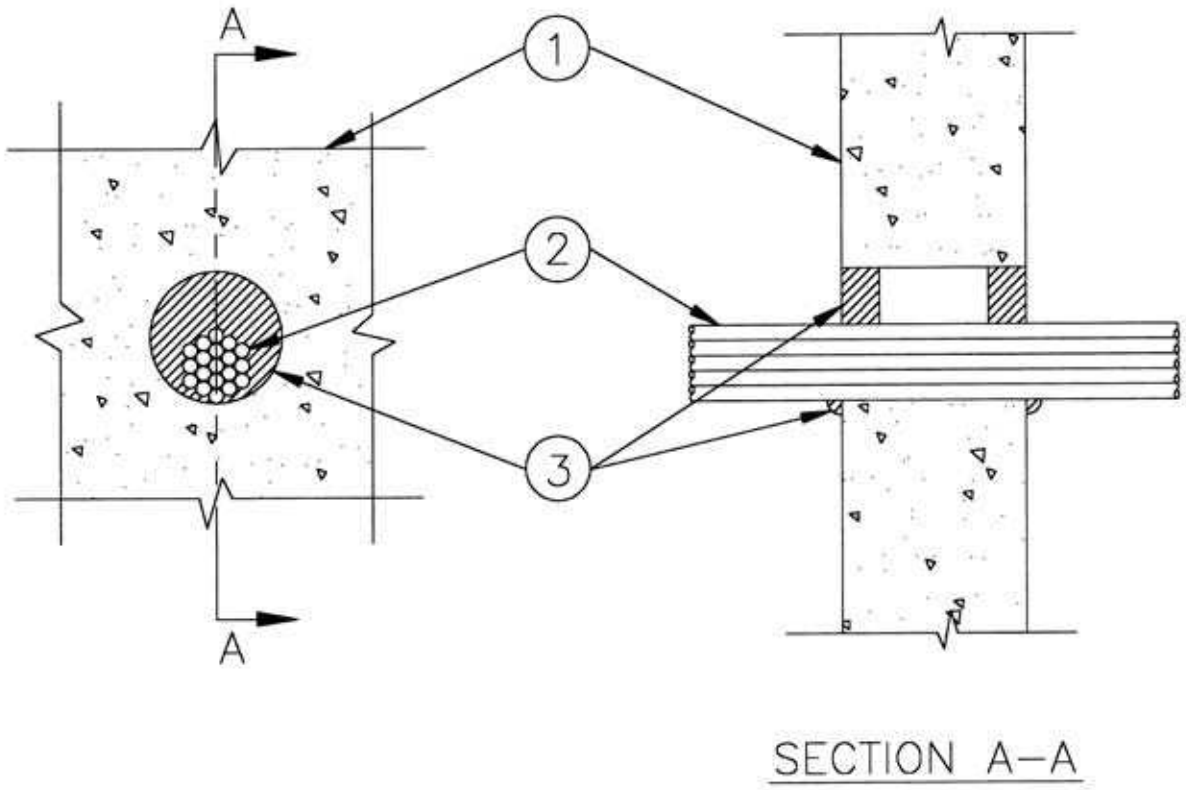

1. **Wall Assembly** – Min 4-7/8 or 6-1/8 in. thick lightweight or normal weight (100-150 pcf) concrete for 1 or 2 hr rated assemblies, respectively. Wall may also be constructed of any UL Classified Concrete Blocks*. Max diam of opening is 3-1/8 in.
   See **Concrete Blocks** (CAZT) category in the Fire Resistance Directory for names of manufacturers.

2. **Cables** – Aggregate cross-sectional area of cable in opening to be max 44 percent of the cross-sectional area of the opening. The annular space between cables and periphery shall be min 0 in. (point contact) to max 1-1/2 in. Cables to be rigidly supported on both sides of floor or wall assembly. Any combination of the following types and sizes of copper conductor cables may be used:
   a) 3/C No. 3/0 (or smaller) copper conductor polyvinyl chloride (PVC) jacketed aluminum clad or steel clad TEK cable with XLPE insulation.
   b) 2/C No. 10 AWG (or smaller) copper conductor PVC cable with XLPE insulation.

3. **Fill, Void or Cavity Material* – Sealant** – Min 5/8 or 1-1/4 in. thickness of fill material for 1 and 2 hr rated wall assemblies, respectively, applied within the annulus, flush with both surfaces of wall. Caulk to be forced into interstices of cable group to max extent possible. At the point contact location between cable(s) and concrete, a min 1/2 in. diam bead of fill material shall be applied at the concrete/cable interface on both surfaces of wall.

GRABBER CONSTRUCTION PRODUCTS INC – GrabberGard EFC

***Bearing the UL Classification Marking**

System No. W-J-4046

F-Rating – 2 Hr
T-Rating – 3/4 Hr

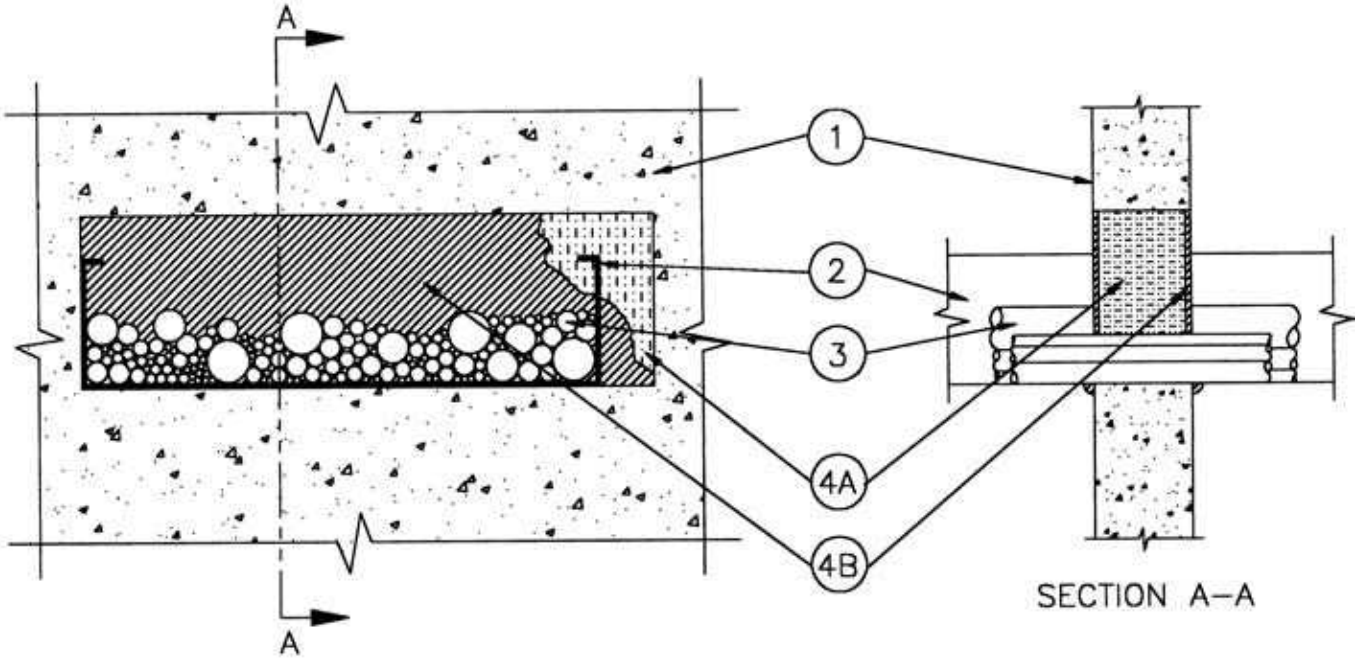

1. **Wall Assembly** – Min 4-7/8 in. thick lightweight or normal weight (100-150 pcf) concrete. Wall may also be constructed of any UL Classified **Concrete Blocks***. Max opening size to be 26 in. by 8 in. (208 sq. in.).
   See **Concrete Blocks** (CAZT) category in the Fire Resistance Directory for names of manufacturers.

2. **Cable Tray+** – Max 24 in. wide by max 6 in. deep 15 gauge (or heavier) aluminum or steel cable tray installed within the opening. The annular space between the cable tray and the periphery of the opening shall be min 0 in. (point contact) to max 2 in. Cable tray to be rigidly supported on both sides of wall assembly.

3. **Cables** – Aggregate cross-sectional area of cables in opening to be max 40 percent of the cross-sectional area of the opening. The annular space between cables and periphery of opening shall be shall be min 0 in. (point contact) to max 5-3/4 in. Cables to be rigidly supported on both sides of wall assembly. The following types and sizes of cables may be used:
   - **a)** 1/C 750 kcmil (or smaller) copper conductor polyvinyl chloride (PVC) jacketed aluminum clad or steel clad TEK cable with cross-linked polyethylene (XLPE) insulation.
   - **b)** 3/C 350 kcmil (or smaller) copper conductor PVC jacketed aluminum clad or steel clad TEK cable with XLPE insulation.
   - **c)** 4/C No. 14 AWG (or smaller) copper conductor PVC jacketed aluminum clad or steel clad TEK cable with XLPE insulation.
   - **d)** Max 25 pair No. 20 AWG (and smaller) copper conductor PVC jacketed cable with PVC insulation.
   - **e)** 1/C 400 kcmil (or smaller) aluminum or copper conductor cable with XLPE insulation.
   - **f)** 4/C No. 6 AWG (or smaller) copper conductor PVC jacketed cable with XLPE insulation.

W-J-4046

4. **Firestop System** – The firestop system shall consist of the following:

a) Packing Material – Min 3-5/8 in. thickness of min 4 pcf mineral wool batt insulation packed into opening as a permanent form. Packing material to be recessed from both surfaces of wall as to accommodate the required thickness of fill material (Item B1 and B2).

b1) Fill, Void or Cavity Material* – Sealant – Min 1/8 in. thickness of fill material sprayed or brushed on each side of wall assembly completely covering mineral wool, overlapping a min 1/2 in. onto concrete. At point contact location between penetrant and periphery of opening, a min 1/2 in. overlap of fill material shall be applied onto penetrant and concrete on both surfaces of wall.

GRABBER CONSTRUCTION PRODUCTS INC – GrabberGard EFS

b2) Fill, Void or Cavity Material* – Sealant – As an alternative to Item B1, min 1/4 in. thickness of fill material applied within annulus, flush with both sides of wall. At point contact location between penetrant and periphery of opening, a min 1/2 in. diam bead of fill material shall be applied at the concrete/penetrant interface on both surfaces of wall.

GRABBER CONSTRUCTION PRODUCTS INC – GrabberGard IFC

+Bearing the UL Listing Marking
***Bearing the UL Classification Marking**

System No. W-J-4047

F-Rating – 2 Hr
T-Rating – 3/4 Hr

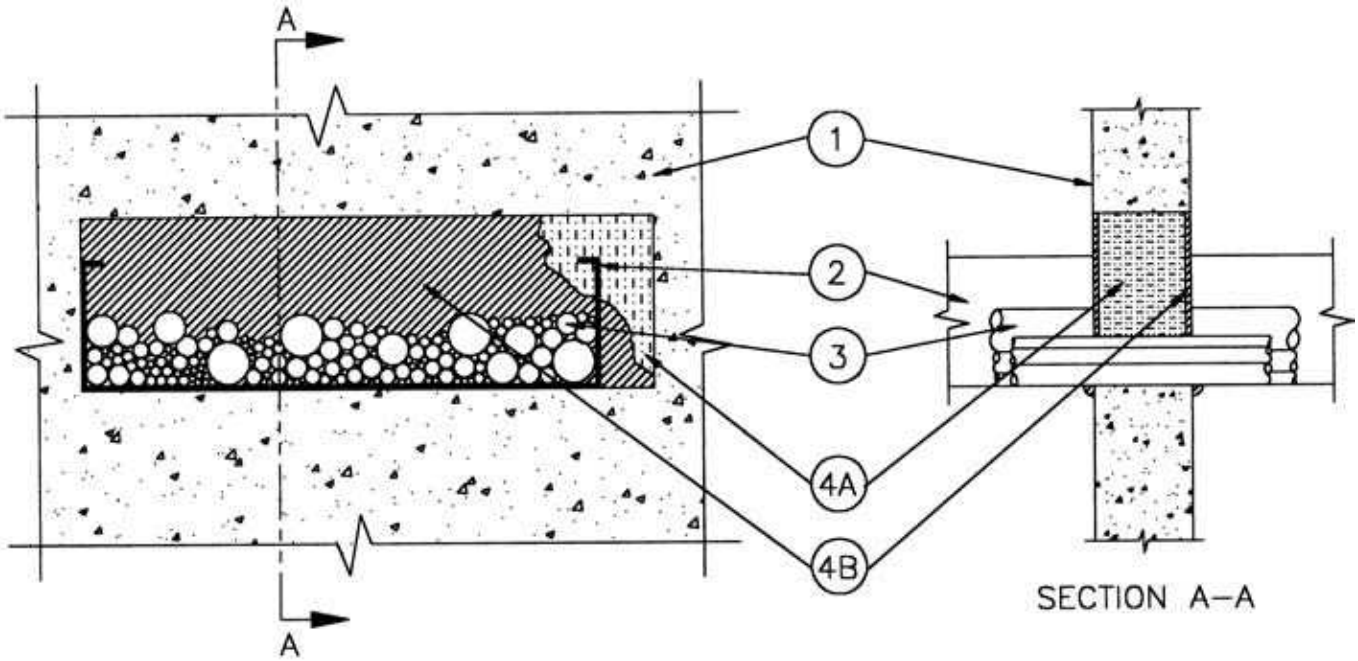

1. **Wall Assembly** – Min 4-7/8 in. thick lightweight or normal weight (100-150 pcf) concrete. Wall may also be constructed of any UL Classified **Concrete Blocks***. Max opening size to be 26 in. by 8 in. (208 sq. in.).
   See **Concrete Blocks** (CAZT) category in the Fire Resistance Directory for names of manufacturers.

2. **Cable Tray+** – Max 24 in. wide by max 6 in. deep 15 gauge (or heavier) aluminum or steel cable tray installed within the opening. The annular space between the cable tray and the periphery of the opening shall be min 0 in. (point contact) to max 2 in. Cable tray to be rigidly supported on both sides of wall assembly.

3. **Cables** – Aggregate cross-sectional area of cables in opening to be max 40 percent of the cross-sectional area of the opening. The annular space between cables and periphery of opening shall be shall be min 0 in. (point contact) to max 5-3/4 in. Cables to be rigidly supported on both sides of wall assembly. The following types and sizes of cables may be used:
   - **a)** 1/C 750 kcmil (or smaller) copper conductor polyvinyl chloride (PVC) jacketed aluminum clad or steel clad TEK cable with cross-linked polyethylene (XLPE) insulation.
   - **b)** 3/C 350 kcmil (or smaller) copper conductor PVC jacketed aluminum clad or steel clad TEK cable with XLPE insulation.
   - **c)** 4/C No. 14 AWG (or smaller) copper conductor PVC jacketed aluminum clad or steel clad TEK cable with XLPE insulation.
   - **d)** Max 25 pair No. 20 AWG (and smaller) copper conductor PVC jacketed cable with PVC insulation.
   - **e)** 1/C 400 kcmil (or smaller) aluminum or copper conductor cable with XLPE insulation.
   - **f)** 4/C No. 6 AWG (or smaller) copper conductor PVC jacketed cable with XLPE insulation.

W-J-4047

4. **Firestop System** – The firestop system shall consist of the following:

a) **Packing Material** – Min 4-3/8 in. thickness of min 4 pcf mineral wool batt insulation packed into opening as a permanent form. Packing material to be recessed from both surfaces of wall as to accommodate the required thickness of fill material (Item B).

b) **Fill, Void or Cavity Material* – Sealant** – Min 1/4 in. thickness of fill material applied within annulus, flush with both sides of wall. At point contact location between penetrant and periphery of opening, a min 1/2 in. diam bead of fill material shall be applied at the periphery of opening/ penetrant interface on both surfaces of wall.

GRABBER CONSTRUCTION PRODUCTS INC – GrabberGard EFC

+Bearing the UL Listing Marking
***Bearing the UL Classification Marking**

System No. W-J-7064

F Rating – 1 & 2 Hr (See Item 1)
T Rating – 0 Hr

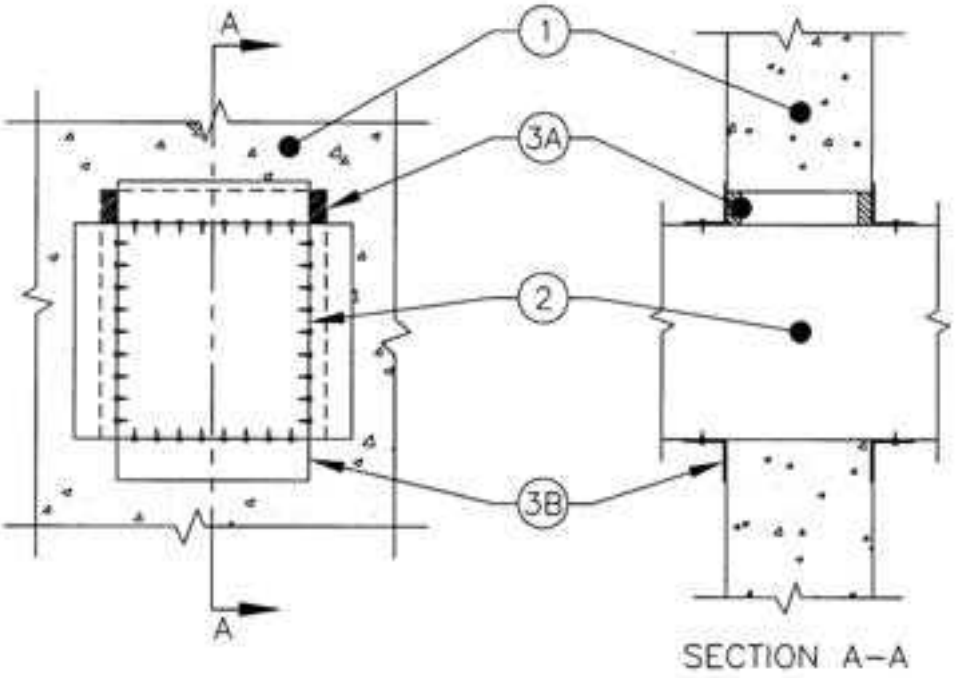

1. **Wall Assembly** – Min 6 in. thick reinforced lightweight or normal weight (100-150 pcf) concrete. Wall may also be constructed of any UL Classified **Concrete Blocks***. Max size of opening to be 957 sq. in. with a max dimension of 33 in.
   See **Concrete Blocks** (CAZT) category in the Fire Resistance Directory for names of manufacturers.

2. **Steel Duct** – Nom 26 in. by 30 (or smaller) No. 24 gauge (or heavier) galv steel duct to be installed either concentrically or eccentrically within the firestop system. An annular space of min 0 in. (point contact) to max 1-1/2 in. is required within the firestop system. Steel duct to be rigidly supported on both sides of wall assembly.

3. **Firestop System** – The firestop system shall consist of the following:
   a) **Fill, Void or Cavity Material* – Sealant** – Min 5/8 in. thickness of fill material applied within annulus, flush with both surfaces of wall assembly. At point contact location between duct and concrete, a min 1/4 in. diam bead of sealant shall be applied at the concrete/duct interface on both surfaces of wall assembly.

   GRABBER CONSTRUCTION PRODUCTS INC – GrabberGard IFC

   b) **Retaining Angles** – Min 16 gauge galv steel angles sized to lap duct a min of 2 in. and lap wall surfaces of a min of 1 in. Angles attached to duct on both sides of wall with min 1/2 in. long, No. 10 (or larger) sheet metal screws spaced a max of 1 in. from each end of duct and spaced a max of 6 in. OC.

***Bearing the UL Classification Marking**

System No. W-J-7065

F Rating – 1 & 2 Hr (See Item 1)
T Rating – 0 Hr

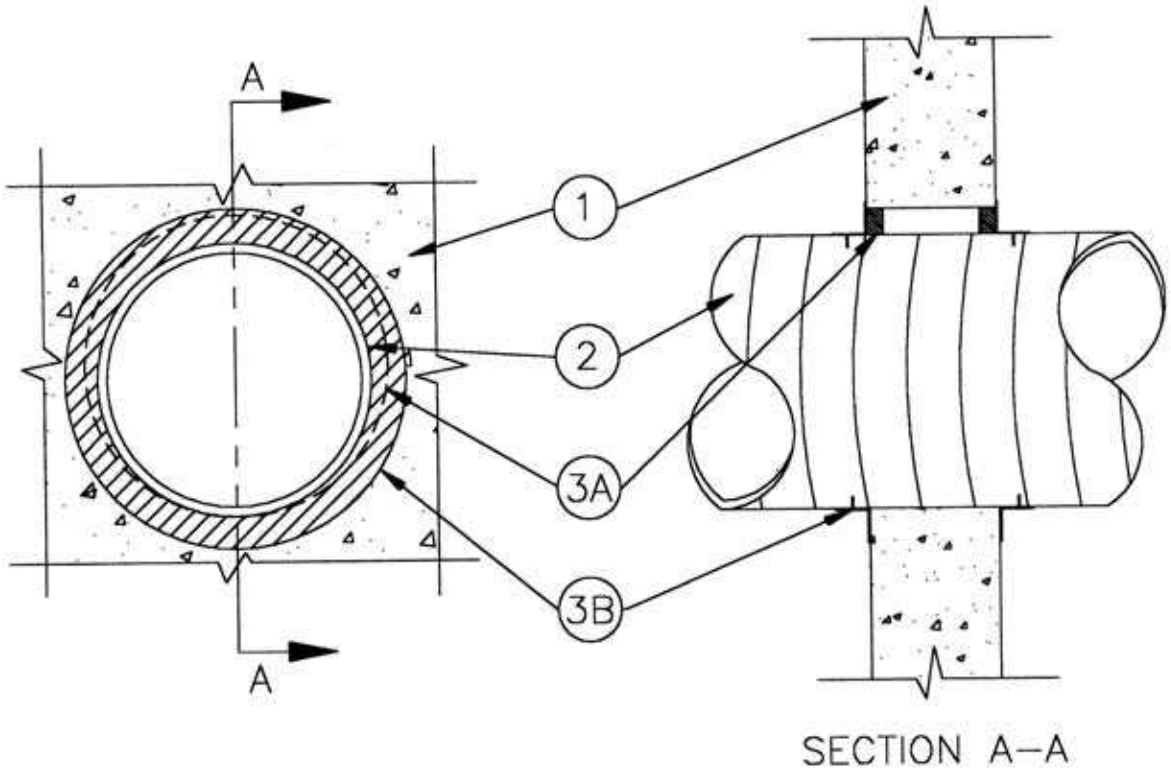

1. **Wall Assembly** – Min 6 in. thick reinforced lightweight or normal weight (100-150 pcf) concrete. Wall may also be constructed of any UL Classified **Concrete Blocks***. Max diam of opening is 17 in.
   See **Concrete Blocks** (CAZT) category in the Fire Resistance Directory for names of manufacturers.

2. **Steel Duct** – Nom 16 in. diam (or smaller) No. 22 gauge (or heavier) galv steel duct to be installed either concentrically or eccentrically within the firestop system. The annular space between duct and periphery of opening shall be min 0 in. (point contact) to max 1 in. Duct to be rigidly supported on both sides of wall assembly.

3. **Firestop System** – The firestop system shall consist of the following:
   a) **Fill, Void or Cavity Material* – Sealant** – Min 5/8 in. thickness of fill material applied within annulus, flush with both surfaces of wall assembly. At the point contact location between duct and concrete, a min 1/4 in. diam bead of sealant shall be applied at the concrete/duct interface on both surfaces of wall assembly.

   GRABBER CONSTRUCTION PRODUCTS INC – GrabberGard IFC

   a) **Retaining Angles** – Min 16 gauge galv steel angles roll-formed and sized to lap duct a min of 1 in. and lap wall surfaces of a min of 1 in. Angles attached to duct on both sides of wall with min 1/2 in. long, No. 10 (or larger) sheet metal screws spaced a max of 6 in. OC.

***Bearing the UL Classification Marking**

System No. W-J-7066

F Ratings – 1 and 2 Hr

T Rating – 0 Hr

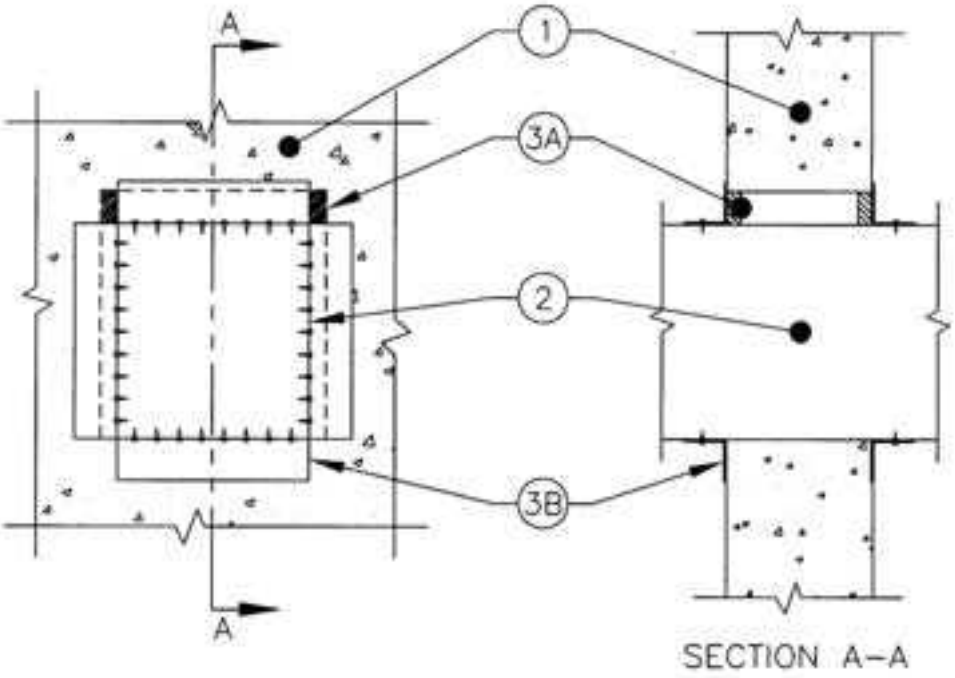

1. **Wall Assembly** – Min 6 in. thick reinforced lightweight or normal weight (100-150 pcf) concrete. Wall may also be constructed of any UL Classified Concrete Blocks*. Max size of opening to be 957 sq. in. with a max dimension of 33 in.
   See **Concrete Blocks** (CAZT) category in the Fire Resistance Directory for names of manufacturers.

2. **Steel Duct** – Nom 26 in. by 30 (or smaller) No. 24 gauge (or heavier) galv steel duct to be installed either concentrically or eccentrically within the firestop system. An annular space of min 0 in. (point contact) to max 1-1/2 in. is required within the firestop system. Steel duct to be rigidly supported on both sides of wall assembly.

3. **Firestop System** – The firestop system shall consist of the following:
   a) **Fill, Void or Cavity Material* – Sealant** – Min 5/8 in. thickness of fill material applied within annulus, flush with both surfaces of wall assembly. At point contact location between duct and concrete, a min 1/4 in. diam bead of sealant shall be applied at the concrete/duct interface on both surfaces of wall assembly.

   GRABBER CONSTRUCTION PRODUCTS INC – GrabberGard EFC

   b) **Retaining Angles** – Min 16 gauge galv steel angles sized to lap duct a min of 2 in. and lap wall surfaces of a min of 1 in. Angles attached to duct on both sides of wall with min 1/2 in. long, No. 10 (or larger) sheet metal screws spaced a max of 1 in. from each end of duct and spaced a max of 6 in. OC.

***Bearing the UL Classification Marking**

System No. W-J-7067

F Rating – 1 & 2 Hr

T Rating – 0 Hr

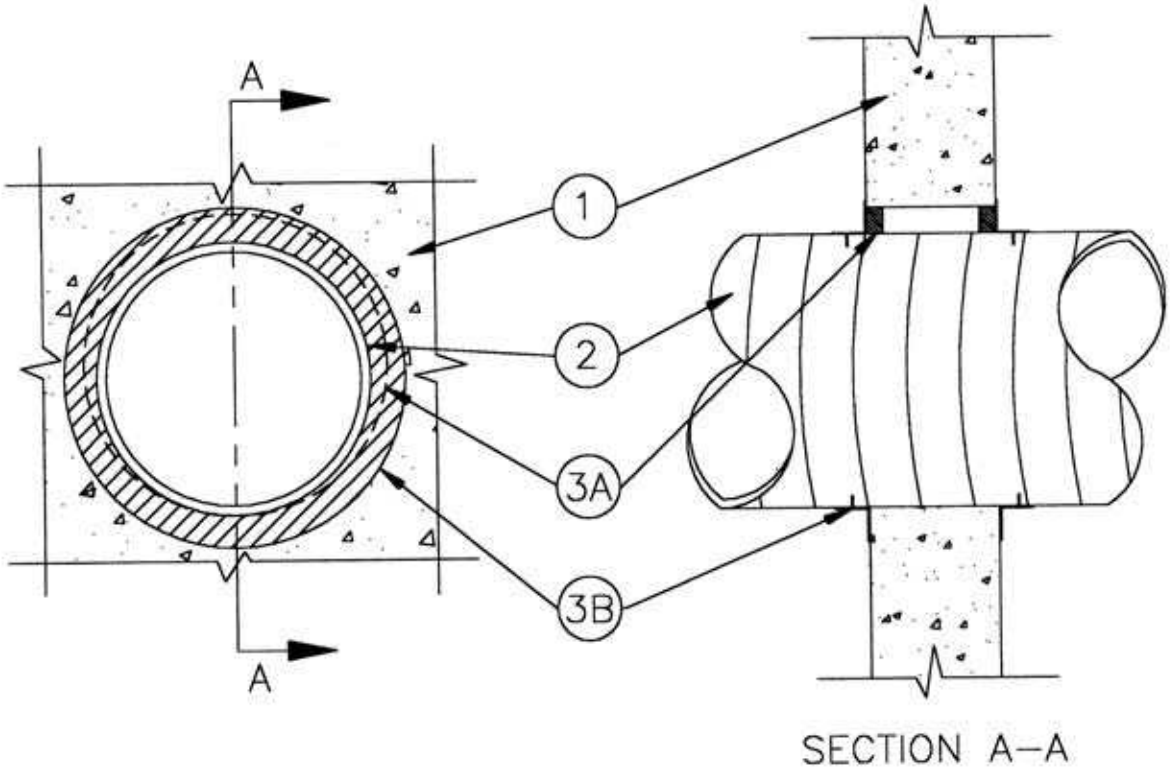

1. **Wall Assembly** – Min 6 in. thick reinforced lightweight or normal weight (100-150 pcf) concrete. Wall may also be constructed of any UL Classified Concrete Blocks*. Max diam of opening is 17 in.
   See Concrete Blocks (CAZT) category in the Fire Resistance Directory for names of manufacturers.

2. **Steel Duct** – Nom 16 in. diam (or smaller) No. 22 gauge (or heavier) galv steel duct to be installed either concentrically or eccentrically within the firestop system. The annular space between duct and periphery of opening shall be min 0 in. (point contact) to max 1 in. Duct to be rigidly supported on both sides of wall assembly.

3. **Firestop System** – The firestop system shall consist of the following:
   a) **Fill, Void or Cavity Material* – Sealant** – Min 5/8 in. thickness of fill material applied within annulus, flush with both surfaces of wall assembly. At the point contact location between duct and concrete, a min 1/4 in. diam bead of sealant shall be applied at the concrete/duct interface on both surfaces of wall assembly.

   GRABBER CONSTRUCTION PRODUCTS INC – GrabberGard EFC

   b) **Retaining Angles** – Min 16 gauge galv steel angles roll-formed and sized to lap duct a min of 1 in. and lap wall surfaces of a min of 1 in. Angles attached to duct on both sides of wall with min 1/2 in. long, No. 10 (or larger) sheet metal screws spaced a max of 6 in. OC.

***Bearing the UL Classification Marking**

System No. W-L-1338

F Rating – 1, 2, 3 & 4 Hr (See Item 1)
T Rating – 0 & 1/4 Hr (See Item 2)

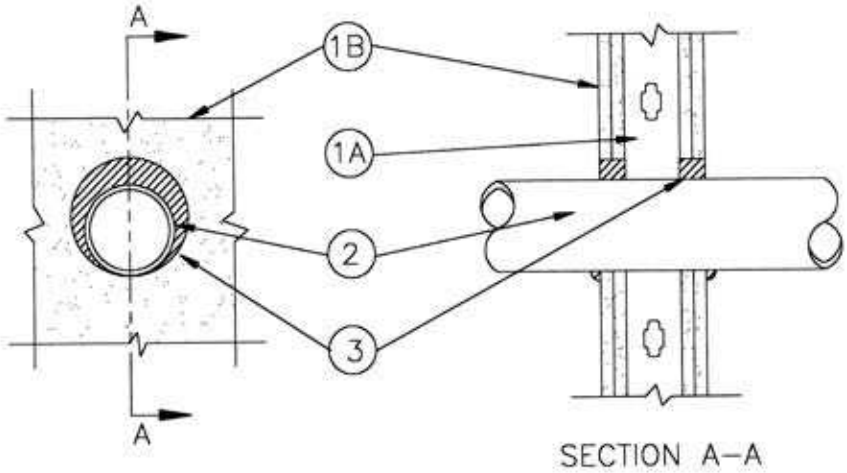

1. **Wall Assembly** – The 1, 2, 3 or 4 hr fire-rated gypsum wallboard/stud wall assembly shall be constructed of the materials and in the manner specified in the individual U300 or U400 Series Wall and Partition Designs in the UL Fire Resistance Directory and shall include the following construction features:
   - **a) Studs** – Wall framing may consist of either wood studs or steel channel studs. Wood studs to consist of nom 2 by 4 in. lumber spaced 16 in. OC. Steel studs to be min 3-5/8 in. wide and spaced max 24 in. OC.
   - **b) Gypsum Board*** – Thickness, type, number of layers and fasteners as specified in the individual Wall and Partition Design. Max diam of opening is 25-3/8 in.

   The hourly F Rating of the firestop system is equal to the hourly fire rating of the wall assembly in which it is installed.
2. **Through Penetrants** – One metallic pipe, conduit or tubing installed either concentrically or eccentrically within the firestop system. The annular space between pipe, conduit or tubing and periphery of opening shall be min 0 (point contact) in. to max 1-1/4 in. Pipe, conduit or tubing to be rigidly supported on both sides of wall assembly. The following types and sizes of metallic pipes, conduits or tubing may be used:
   - **a) Steel Pipe** – The following types and sizes of steel pipes may be used:
     - **a1)** Nom 12 in. diam (or smaller) Schedule 10 (or heavier) steel pipe.
     - **a2)** Nom 24 in. diam (or smaller) Schedule 40 (or heavier) steel pipe.

     When steel pipe is used, T Rating is 1/4 hr for nom 4 in, diam (or smaller) and 0 hr for steel pipes greater than nom 4 in, diam.
   - **b) Iron Pipe** – Nom 24 in. diam (or smaller) cast or ductile iron pipe. When iron pipe is used T Rating is 1/4 hr.
   - **c) Conduit** – Nom 4 in. diam (or smaller) steel electrical metallic tubing (EMT) or steel conduit. When EMT or steel conduit is used, T Rating is 1/4 hr.
   - **d) Copper Tubing** – Nom 6 in. diam (or smaller) Type L (or heavier) copper tubing. When copper tube is used, T Rating is 0 hr.
   - **e) Copper Pipe** – Nom 6 in. diam (or smaller) Regular (or heavier) copper pipe. When copper pipe is used, T Rating is 0 hr.
3. **Fill, Void or Cavity Material* – Sealant** – Min 5/8 in. thickness of fill material for 1 hr rated wall assemblies and 1 in. thickness of fill material for 2, 3 or 4 hr rated wall assemblies, applied within the annulus, flush with both surfaces of wall. At point contact location between penetrant and gypsum board, a min 1/2 in. diam bead of fill material shall be installed at the gypsum board/penetrant interface on both surfaces of wall.

GRABBER CONSTRUCTION PRODUCTS INC – GrabberGard IFC

***Bearing the UL Classification Marking**

System No. W-L-1342

F Rating – 1, 2, 3 & 4 Hr (See Item 1)

T Rating – 0 & 1/4 Hr (See Item 2)

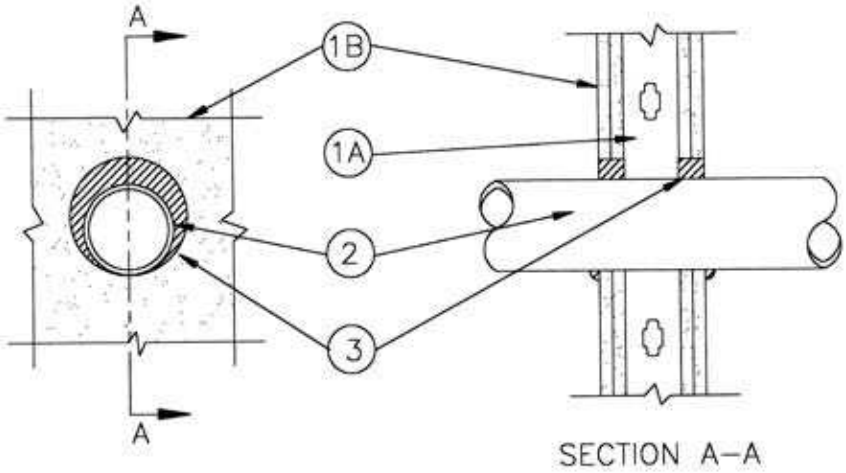

1. **Wall Assembly** – The 1, 2, 3 or 4 hr fire-rated gypsum wallboard/stud wall assembly shall be constructed of the materials and in the manner specified in the individual U300 or U400 Series Wall and Partition Designs in the UL Fire Resistance Directory and shall include the following construction features:
   - **a) Studs** – Wall framing may consist of either wood studs or steel channel studs. Wood studs to consist of nom 2 by 4 in. lumber spaced 16 in. OC. Steel studs to be min 3-5/8 in. wide and spaced max 24 in. OC.
   - **b) Wallboard, Gypsum*** – Thickness, type, number of layers and fasteners as specified in the individual Wall and Partition Design. Max diam of opening is 25-3/8 in.

   The hourly F Rating of the firestop system is equal to the hourly fire rating of the wall assembly in which it is installed.
2. **Through Penetrants** – One metallic pipe, conduit or tubing installed either concentrically or eccentrically within the firestop system. The annular space between pipe, conduit or tubing and periphery of opening shall be min 0 (point contact) in. to max 1-1/4 in. Pipe, conduit or tubing to be rigidly supported on both sides of wall assembly. The following types and sizes of metallic pipes, conduits or tubing may be used:
   - **a)** Steel Pipe – The following types and sizes of steel pipes may be used:
     - **a1)** Nom 12 in. diam (or smaller) Schedule 10 (or heavier) steel pipe.
     - **a2)** Nom 24 in. diam (or smaller) Schedule 40 (or heavier) steel pipe.

     When steel pipe is used, T Rating is 1/4 hr for nom 4 in, diam (or smaller) and 0 hr for steel pipes greater than nom 4 in, diam.
   - **b) Iron Pipe** – Nom 24 in. diam (or smaller) cast or ductile iron pipe. When iron pipe is used T Rating is 1/4 hr.
   - **c) Conduit** – Nom 4 in. diam (or smaller) steel electrical metallic tubing (EMT) or steel conduit. When EMT or steel conduit is used, T Rating is 1/4 hr.
   - **d) Copper Tubing** – Nom 6 in. diam (or smaller) Type L (or heavier) copper tubing. When copper tube is used, T Rating is 0 hr.
   - **e) Copper Pipe** – Nom 6 in. diam (or smaller) Regular (or heavier) copper pipe. When copper pipe is used, T Rating is 0 hr.
3. **Fill, Void or Cavity Material* – Sealant** – Min 5/8 in. thickness of fill material for 1 hr rated wall assemblies and 1 in. thickness of fill material for 2, 3 or 4 hr rated wall assemblies, applied within the annulus, flush with both surfaces of wall. At point contact location between penetrant and gypsum board, a min 1/2 in. diam bead of fill material shall be installed at the gypsum board/penetrant interface on both surfaces of wall.

GRABBER CONSTRUCTION PRODUCTS INC – GrabberGard EFC

***Bearing the UL Classification Marking**

System No. W-L-1449

F Rating – 1 & 2 Hr (See Item 1B)
T Rating –1/4 Hr

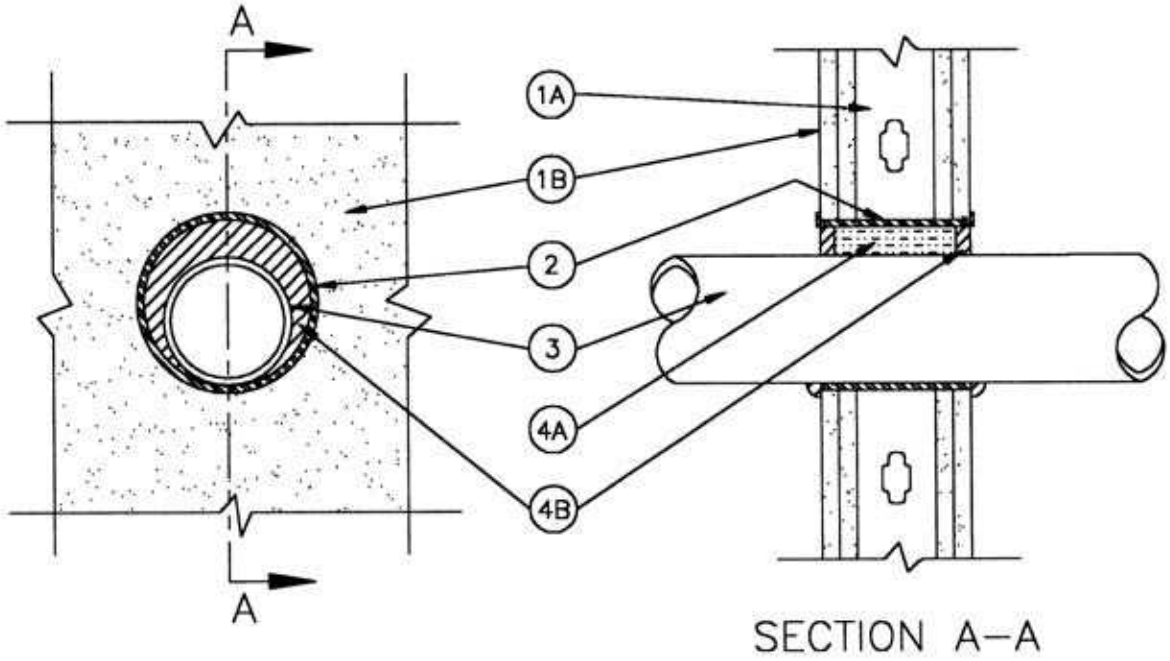

1. **Wall Assembly** – The fire-rated gypsum wallboard/stud wall assembly shall be constructed of the materials and in the manner specified in the individual U300, U400 or V400 Series Wall and Partition Designs in the UL Fire Resistance Directory and shall include the following construction features:
   - **a) Studs** – Wall framing may consist of either wood studs or steel channel studs. Wood studs to consist of nom 2 in. by 4 in. (38 mm by 89 mm) lumber spaced max 16 in. (406 m) OC. Steel studs to be min 3-5/8 in. (92 mm) wide and spaced max 24 in. (610 mm) OC.
   - **b) Gypsum Board*** – Thickness, type, number of layers and fasteners as specified in the individual Wall and Partition Design. Max diam of opening is 8-1/2 in. (216 mm).

   The hourly F Rating of the firestop system is equal to the hourly rating of the wall in which it is installed.
2. **Metallic Sleeve** – Outside diam of sleeve to be tightly fitted with inside diam of opening, flush with both surfaces of wall assembly. The following metallic sleeves may be used:
   - **a) Sheet Metal Sleeve** – Cylindrical sleeve fabricated from 24 gauge or heavier galv steel and having a min 1 in. (25 mm) overlap along longitudinal seam.
   - **b) Steel Sleeve** – Nom 8 in. (203 mm) diam (or smaller) schedule 40 (or lighter) steel cast or ductile iron sleeve.
3. **Through Penetrants** – One metallic pipe, conduit or tubing installed either concentrically or eccentrically within the firestop system. The annular space between pipe, conduit or tubing and periphery of sleeve shall be min 0 in. (point contact) to max 1-7/8 in. (48 mm). Pipe, conduit or tubing to be rigidly supported on both sides of wall assembly. The following types and sizes of metallic pipes, conduits or tubing may be used:
   - **a) Steel Pipe** – Nom 6 in. (152 mm) diam (or smaller) Schedule 40 (or heavier) steel pipe.
   - **b) Iron Pipe** – Nom 6 in. (152 mm) diam (or smaller) cast or ductile iron pipe.
   - **c) Conduit** – Nom 4 in. (102 mm) diam (or smaller) steel electrical metallic tubing or steel conduit.
   - **d) Copper Tubing** – Nom 4 in. (102 mm) diam (or smaller) Type L (or heavier) copper tubing.
   - **e) Copper Pipe** – Nom 4 in. (102 mm) diam (or smaller) Regular (or heavier) copper pipe.

W-L-1449

4. **Firestop System** – The firestop system shall consist of the following:

a) **Packing Material** – Min 3-5/8 in. or 4-7/8 in. (92 or 124 mm) thickness of min 4 pcf (64 kg/m3)mineral wool batt insulation for 1 and 2 hr rated assemblies respectively, firmly packed into opening, with approximately 25 percent compression within the metallic sleeve. Packing material to be recessed from both surfaces of wall assembly to accommodate the required thickness of fill material (Item 4B).

b) **Fill, Void or Cavity Material* – Sealant** – Min 1/2 in. (13 mm) thickness of fill material applied within the annulus, flush with both surfaces of wall. At point contact location between metallic sleeve and penetrant, a min 1/2 in. (13 mm) diam bead of fill material shall be applied at the metallic sleeve/penetrant interface on both surfaces of wall. Min 1/16 in. (1.6 mm) thickness of fill material applied over edge of sleeve, overlapping wallboard surface a min 1/4 in. (6 mm)

GRABBER CONSTRUCTION PRODUCTS INC – GrabberGard IFC or GrabberGard EFC

***Bearing the UL Classification Marking**

System No. W-L-1475

ANSI/UL 1479 (ASTM E814)	CAN/ULC S 115
F Rating – 2 Hr	F Rating – 2 Hr
FT Rating – 0 Hr	FT Rating – 0 Hr
	FH – Rating 2 Hr
	FTH Rating – 0 Hr

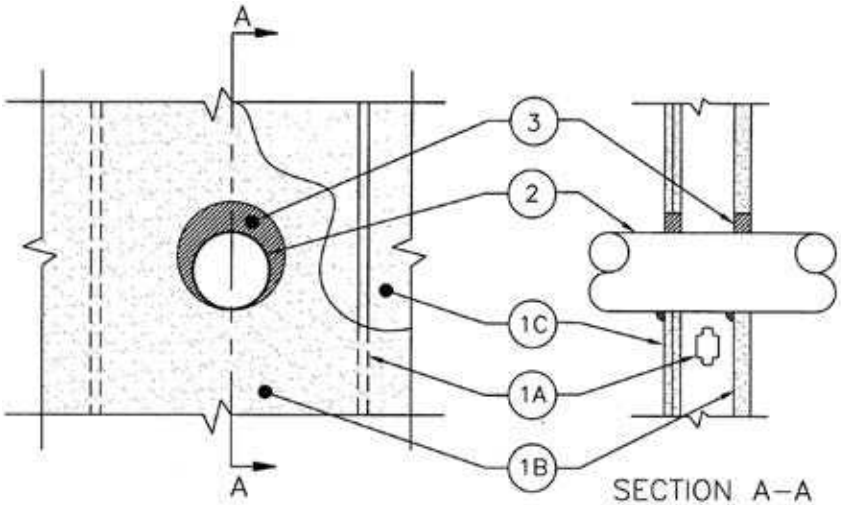

1. **Wall Assembly** – The 2 hr fire rated shaft wall assembly shall be constructed of the materials and in the manner described in the individual U400, V400 or W 400 -Series Wall or Partition Design in the UL Fire Resistance Directory and shall include the following construction features:
   - **a) Steel Studs** – C-H-shaped studs, 2-1/2 in.(64 mm) wide by min 1-1/2 in. (38 mm) deep, spaced 24 in. (610 mm) OC.
   - **b) Gypsum Board*** – 1 in. (25 mm) thick gypsum board liner panels, supplied in nom 24 in. (610 mm) widths as specified in the individual Wall and Partition Design. Max diam of opening is 10 in. (254 mm).
   - **c) Gypsum Board*** – Two layers of 1/2 in. (13 mm) thick gypsum board as specified in the individual Wall and Partition Design. Max diam of opening is 10 in. (254 mm).
2. **Through Penetrants** – One metallic pipe, conduit or tubing installed either concentrically or eccentrically within the firestop system. The annular space between pipe, conduit or tubing and periphery of opening shall be min 0 in. (point contact) to max 1-3/8 in. (35 mm). Pipe, conduit or tubing to be rigidly supported on both sides of wall assembly. The following types of and sizes of metallic pipes, conduits or tubing may be used:
   - **a) Steel Pipe** – Nom 8 in. (203 mm) diam (or smaller) Schedule 10 (or heavier) steel pipe
   - **b) Iron Pipe** – Nom 8 in. (203 mm) diam (or smaller) cast or ductile iron pipe
   - **c) Conduit** – Nom 4 in. (102 mm) diam (or smaller) steel electrical metallic tubing (EMT) or nom 6 in. (152 mm) (or smaller) rigid steel conduit
   - **d) Copper Tubing** – Nom 4 in.(102 mm) diam (or smaller) Type L (or heavier) copper tubing
   - **e) Copper Pipe** – Nom 4 in. (102 mm) diam (or smaller) Regular (or heavier) copper pipe
3. **Fill, Void or Cavity Material* – Sealant** – Min 1 in. (25 mm) thickness of sealant applied within the annulus, flush with both surfaces of wall. Min. 1/2 in. (13 mm) diam bead of fill material shall be applied at the gypsum board/penetrant interface at the point contact location on outer surface of wall on side using two layers of 1/2 in. (13 mm) gypsum board (Item 1C).a)

GRABBER CONSTRUCTION PRODUCTS INC – GrabberGard IFC or GrabberGard EFC

***Bearing the UL Classification Marking**

FL0712

Underwriters Laboratories Inc.®

System No. W-L-2384

F Rating – 1, 2, 3 & 4 Hr (See Item 1)
T Rating – 1, 2, 3 & 4 Hr (See Item 1)

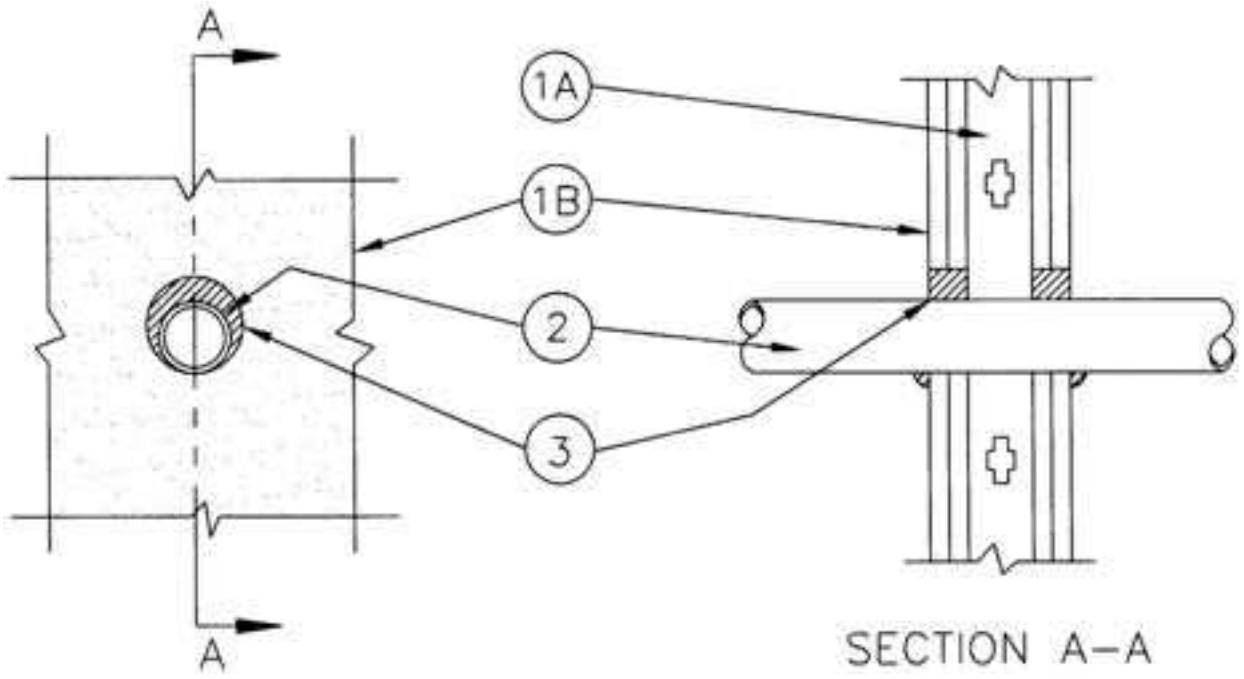

1. Wall Assembly – The 1, 2, 3 or 4 hr fire-rated gypsum wallboard/stud wall assembly shall be constructed of the materials and in the manner specified in the individual U300 or U400 Series Wall and Partition Designs in the UL Fire Resistance Directory and shall include the following construction features:
   - **a) Studs** – Wall framing may consist of either wood studs or steel channel studs. Wood studs to consist of nom 2 by 4 in. lumber spaced 16 in. OC. Steel studs to be min 3-5/8 in. wide and spaced max 24 in. OC.
   - **b) Gypsum Board*** – The gypsum board type, thickness, number of layers, fasteners type and sheet orientation shall be as specified in the individual U300 or U400 Series Design in the UL Fire Resistance Directory. Max diam of opening is 3-1/8 in.

   The hourly F and T Ratings of the firestop system are equal to the hourly fire rating of the assembly in which it is installed.
2. **Through Penetrants** – One nonmetallic pipe or tubing installed either concentrically or eccentrically within the firestop system. Pipe or tubing to be rigidly supported on both sides of wall assembly. The following types and sizes of nonmetallic pipes or tubing may be used:
   - **a) Chlorinated Polyvinyl Chloride (CPVC) Pipe** – Nom 2 in. diam (or smaller) SDR 11 CPVC pipe for use in closed (process or supply) piping systems. The annular space between pipe and periphery of opening shall be min 1/4 in. to max 1/2 in.
   - **b) Crosslinked Polyethylene (PEX) Tubing** - Nom 1-1/2 in. diam (or smaller) SDR 9 PEX tubing for use in closed (process or supply) piping systems. The annular space between tubing and periphery of opening shall be min 1/4 in. to max 3/8 in.
   - **c) Polyvinyl Chloride (PVC) Pipe** - Nom 2 in. diam (or smaller) Schedule 40 solid core or cellular core PVC pipe for use in closed (process or supply) piping system. The annular space between pipe and periphery of opening shall be min 1/4 in. to max 1/2 in.
3. **Fill, Void or Cavity Material*** – Sealant – Min 5/8 in. thickness of fill material for 1 hr rated wall assemblies and min 1 in. thickness of fill material for 2, 3 or 4 hr rated wall assemblies, applied within the annulus, flush with both surfaces of wall.

GRABBER CONSTRUCTION PRODUCTS INC – GrabberGard IFC

***Bearing the UL Classification Marking**

System No. W-L-2387

F Rating – 1, 2, 3 & 4 Hr (See Item 1B)
T Rating – 1, 2, 3 & 4 Hr(See Item 1B)

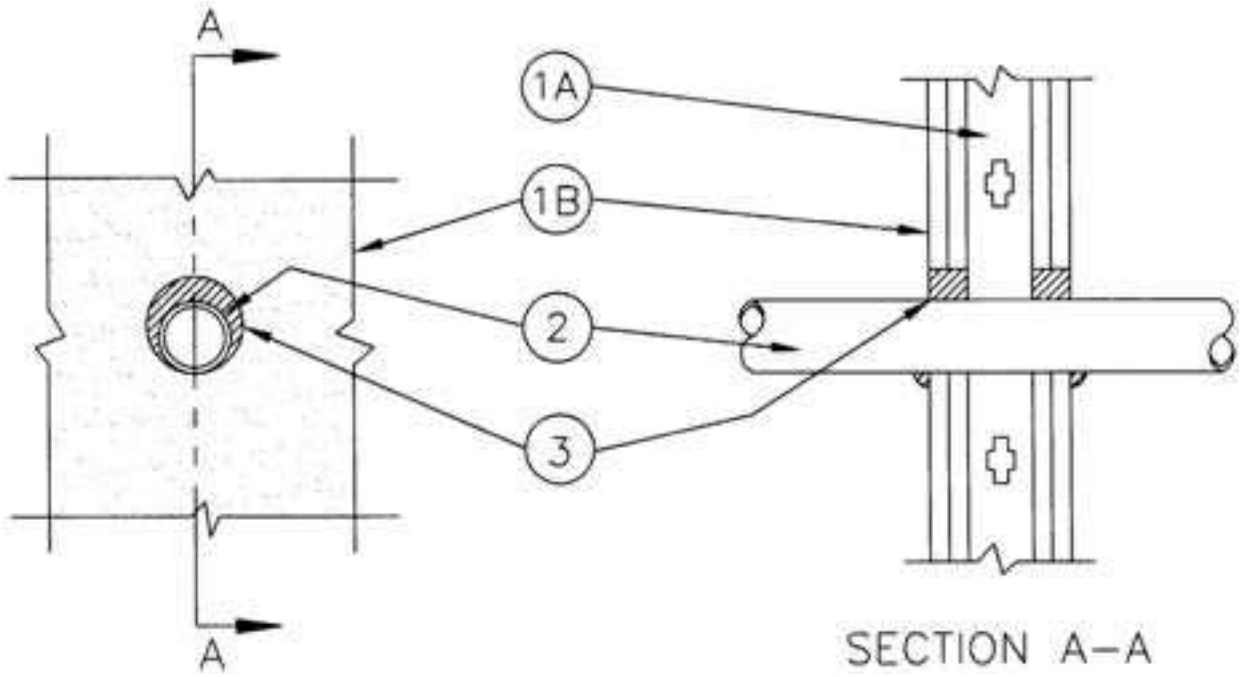

1. **Wall Assembly** – The 1, 2, 3 or 4 hr fire-rated gypsum wallboard/stud wall assembly shall be constructed of the materials and in the manner specified in the individual U300 or U400 Series Wall and Partition Designs in the UL Fire Resistance Directory and shall include the following construction features:
   - **a) Studs** – Wall framing may consist of either wood studs or steel channel studs. Wood studs to consist of nom 2 by 4 in. lumber spaced 16 in. OC. Steel studs to be min 3-5/8 in. wide and spaced max 24 in. OC.
   - **b) Wallboard, Gypsum*** – Thickness, type, number of layers and fasteners as specified in the individual U300 or U400 Series Design in the UL Fire Resistance Directory. Max diam of opening is 3-1/8 in.

   The hourly F and T Ratings of the firestop system are equal to the hourly fire rating of the assembly in which it is installed.
2. **Through Penetrants** – One nonmetallic pipe or tubing installed either concentrically or eccentrically within the firestop system. Pipe or tubing to be rigidly supported on both sides of wall assembly. The following types and sizes of nonmetallic pipes or tubing may be used:
   - **a) Chlorinated Polyvinyl Chloride (CPVC) Pipe** – Nom 2 in. diam (or smaller) SDR 11 CPVC pipe for use in closed (process or supply) piping systems. The annular space between pipe and periphery of opening shall be min 1/4 in. to max 1/2 in.
   - **b) Crosslinked Polyethylene (PEX) Tubing** – Nom 1-1/2 in. diam (or smaller) SDR 9 PEX tubing for use in closed (process or supply) piping systems. The annular space between tubing and periphery of opening shall be min 1/4 in. to max 3/8 in.
   - **c) Polyvinyl Chloride (PVC) Pipe** – Nom 2 in. diam (or smaller) Schedule 40 solid core or cellular core PVC pipe for use in closed (process or supply) piping system. The annular space between pipe and periphery of opening shall be min 1/4 in. to max 1/2 in.
3. **Fill, Void or Cavity Material* – Sealant** – Min 5/8 in. thickness of fill material for 1 hr rated wall assemblies and min 1 in. thickness of fill material for 2, 3 or 4 hr rated wall assemblies, applied within the annulus, flush with both surfaces of wall.

GRABBER CONSTRUCTION PRODUCTS INC – GrabberGard EFC

***Bearing the UL Classification Marking**

System No. W-L-2475

F Rating – 1 and 2 Hr (See Item 2)
T Rating – 1 and 1-1/2 Hr (See Item 2)

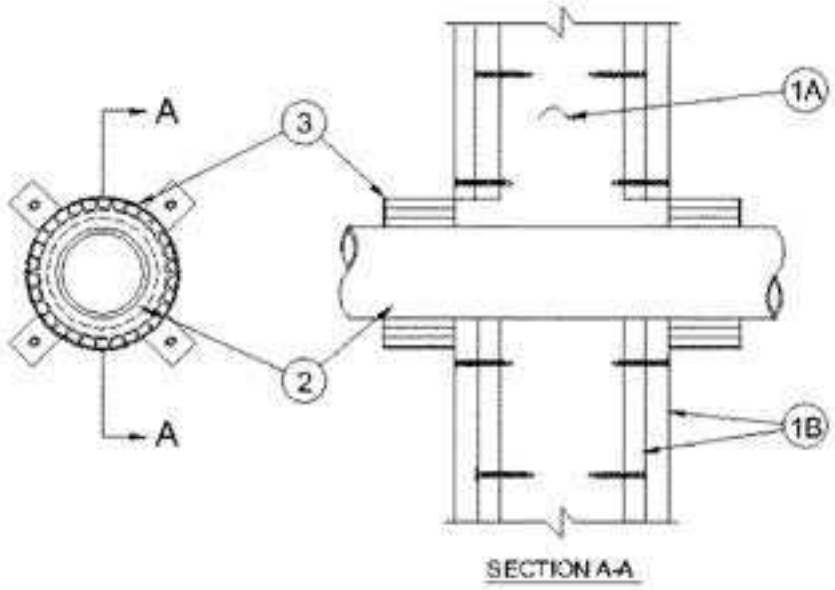

1. **Wall Assembly** – The 1 or 2 hr fire-rated gypsum wallboard/stud wall assembly shall be constructed of the materials and in the manner specified in the individual U300, U400 or V400 Series Wall and Partition Designs in the UL Fire Resistance Directory and shall include the following construction features:
   - **a) Studs** – Wall framing may consist of either wood studs or steel channel studs. Wood studs to consist of nom 2 by 4 in. lumber spaced 16 in. OC. Steel studs to be min 2-1/2 in. wide and spaced max 24 in. OC.
   - **b) Gypsum Board*** – 5/8 in. thick, 4 ft wide with square or tapered edges. The gypsum board type, thickness, number of layers, fastener type and sheet orientation shall be as specified in the individual U300 or U400 Series Design in the UL Fire Resistance Directory. Max diam of opening is 4-3/4 in.

   The hourly F and T Ratings of the firestop system are equal dependent upon the hourly fire rating of the wall assembly in which it is installed and the type of through penetrant within the opening as shown in Item 2.
2. **Through Penetrants** – One nonmetallic pipe to be installed either concentrically or eccentrically within the firestop system. The annular space between pipe or conduit and periphery of opening shall be min 0 in. (point contact) to max 1/4 in. Pipe or conduit to be rigidly supported on both sides of wall assembly. The following types and sizes of nonmetallic pipes or conduit may be used:
   - **a) Polyvinyl Chloride (PVC) Pipe** – Nom 4 in. diam (or smaller) Schedule 40 solid or cellular core PVC pipe for use in closed (process or supply) or vented (drain, waste or vent) piping systems.
   - **b) Chlorinated Polyvinyl Chloride (CPVC) Pipe** – Nom 4 in. diam (or smaller) SDR 11 CPVC pipe for use in closed (process or supply) piping systems.
   - **c) Acrylonitrile Butadiene Styrene (ABS) Pipe** – Nom 4 in. diam (or smaller) Schedule 40 solid or cellular core ABS Pipe for use in closed (process or supply) or vented (drain, waste or vent) piping systems.
   - **d) Rigid Nonmetallic Conduit+** – Nom 4 in. diam (or smaller) Schedule 40 PVC conduit installed in accordance with the National Electrical Code (NFPA No. 70).
   - **e) Flame Retardant Polypropylene (FRPP) Pipe** – Nom 4 in. diam (or smaller) Schedule 40 FRPP pipe for use in closed (process or supply) or vented (drain, waste or vent) piping systems.

W-L-2475

The F and T Ratings of the firestop system are dependent upon the hourly fire rating of the wall assembly and the type of penetrant installed within the firestop system as shown in the following table:

Rating of Wall [hr]	Type of Through Penetrant	F Rating [hr]	T Rating [hr]
1	PVC Conduit, ABS pipe, CPVC pipe or FRPP pipe	1	1
2	PVC Conduit, ABS pipe, CPVC pipe or FRPP pipe	2	1
2	PVC pipe	2	1-1/2

3. **Firestop Device*** – Steel collar lined with an intumescent material sized to fit specific daim of the through penetrant. Device to be installed around through penetrant in accordance with accompanying installation instructions. Device incorporates anchor tabs for securement to both surfaces of wall by means of No. 10 by 1-1/2 in. long laminate steel screws and 1/4 in. by 1-1/2 in. diam steel fender washers at each anchor tab.

GRABBER CONSTRUCTION PRODUCTS INC – GPC

***Bearing the UL Classification Mark**
+Bearing the UL Listing Mark

System No. W-L-2540

F Rating – 1 & 2 Hr (See Item 1)
T Rating – 1/2 Hr

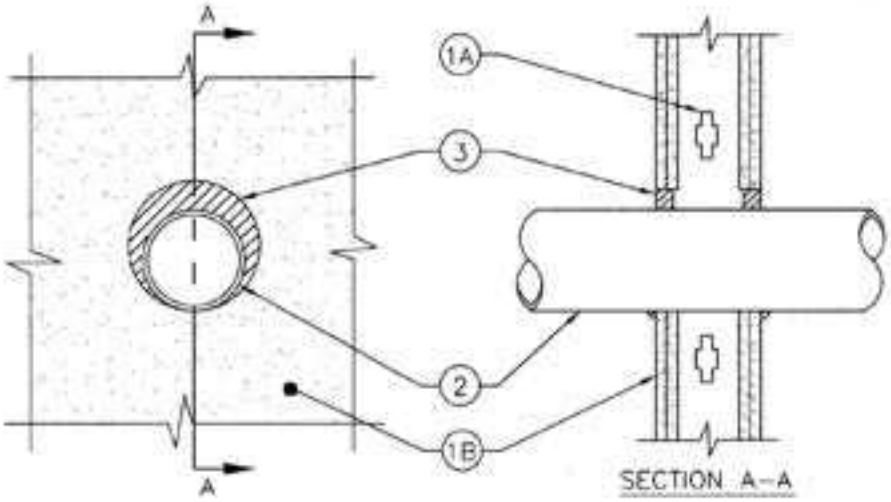

1. **Wall Assembly** – The 1 or 2 hr fire-rated gypsum wallboard/stud wall assembly shall be constructed of the materials and in the manner specified in the individual U300, U400 or V400 Series Wall and Partition Designs in the UL Fire Resistance Directory and shall include the following construction features:
   - **a) Studs** – Wall framing may consist of either wood studs or steel channel studs. Wood Studs to consist of non 2 vy 4 in. (51 by 192 mm) lumber spaced 16 in. (406 mm) OC. Steel studs to be min 3-5/8 in. (89 mm) wide and spaced max 24 in. (610 mm) OC.
   - **a) Gypsum Board*** – Thickness, type, number of layers and fasteners as specified in the individual Wall and Partition Design. Max diam of opening is 7-1/2 in. (191 mm).

   The hourly F Rating of the firestop system is equal to the hourly fire rating of the wall assembly in which it is installed.
2. **Nonmetallic Pipe* – Glass Pipe** – Nom 6 in. (152 mm) diam (or smaller) glass pipe for use in closed (process or supply) or vented (drain, waste or vent) piping systems. The annular space between pipe and periphery of opening shall be min 0 in. (point contact) to max 1 in. (25 mm). Pipe to be rigidly supported on both sides of wall assembly.

   SCHOTT NORTH AMERICA INC
3. **Fill, Void or Cavity Material* – Sealant** – Min 5/8 or 1 in. (16 or 25 mm) thickness of fill material applied within the annulus, flush with both surfaces of wall, for 1 or 2 hr rated walls respectively. At point contact location between penetrant and wallboard, a min 1/2 in. (13 mm) diam bead of fill material shall be applied at the penetrant/wallboard interface on both surfaces of wall.

   GRABBER CONSTRUCTION PRODUCTS INC – GrabberGard IFC

***Bearing the UL Classification Marking**

System No. W-L-3245

F Rating – 1 & 2 Hr (See Item 1)
T Rating – 3/4 Hr (See Item 1)

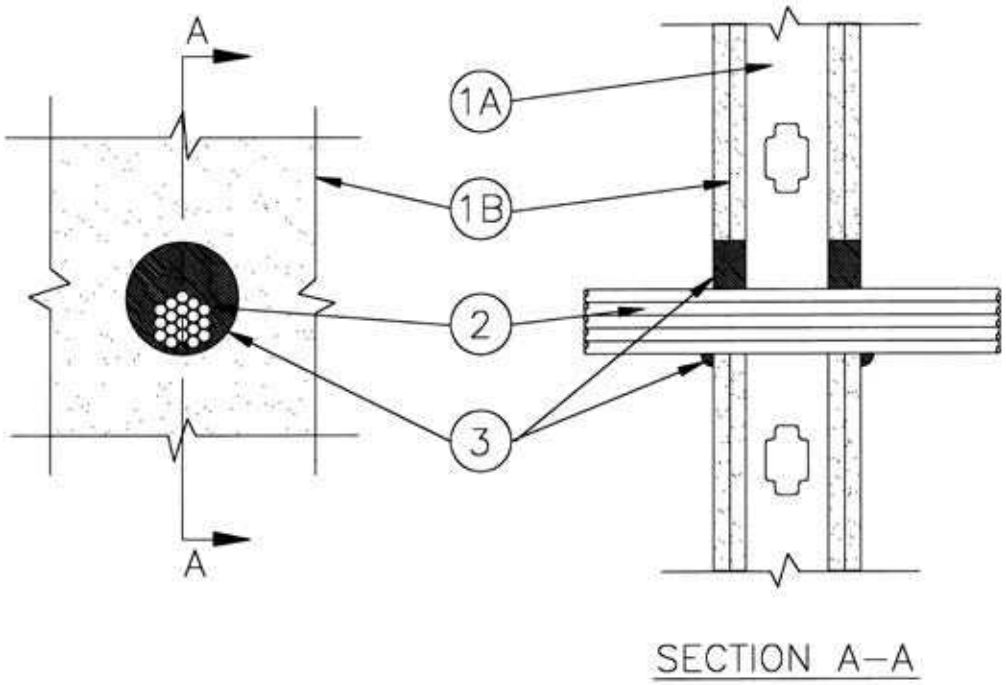

1. **Wall Assembly** – The 1 or 2 hr fire-rated gypsum board/stud wall assembly shall be constructed of the materials and in the manner specified in the individual U300 or U400 Series Wall and Partition Designs in the UL Fire Resistance Directory and shall include the following construction features:
   - **a) Studs** – Wall framing may consist of either wood studs or steel channel studs. Wood studs to consist of nom 2 by 4 in. lumber spaced 16 in. OC. Steel studs to be min 3-5/8 in. wide and spaced max 24 in. OC.
   - **b) Gypsum Board*** – Thickness, type, number of layers and fasteners as specified in the individual Wall and Partition Design. Max diam of opening is 3-1/8 in.

   The hourly F Rating of the firestop system is equal to the hourly fire rating of the wall assembly in which it is installed. The T Rating is 1/2 hr for 1 hour rated and 3/4 hr for 2 hr rated assemblies.
2. **Cables** – Aggregate cross-sectional area of cable in opening to be max 44 percent of the cross-sectional area of the opening. The annular space between cables and periphery shall be min 0 in. (point contact) to max 1-1/2 in. Cables to be rigidly supported on both sides of wall assembly. Any combination of the following types and sizes of copper conductor cables may be used:
   - **a)** 3/C No. 3/0 (or smaller) copper conductor polyvinyl chloride (PVC) jacketed aluminum clad or steel clad TEK cable with XLPE insulation
   - **b)** 2/C No. 10 AWG (or smaller) copper conductor PVC jacketed cable with XLPE insulation.
   - **c) Through Penetration Product*** – Max 3/C No. 2 AWG (or smaller) aluminum or steel clad **Armored Cable*** or aluminum or steel clad **Metal Clad Cable*** with copper conductors.
3. **Fill, Void or Cavity Material* – Sealant** – Min 5/8 or 1-1/4 in. thickness of fill material for 1 and 2 hr rated wall assemblies, respectively, applied within the annulus, flush with both surfaces of wall. Caulk to be forced into interstices of cable group to max extent possible. At the point contact location between cable(s) and gypsum board, a min 1/2 in. diam bead of fill material shall be applied at the gypsum board/cable interface on both surfaces of wall.

GRABBER CONSTRUCTION PRODUCTS INC – GrabberGard IFC

***Bearing the UL Classification Marking**

FL0712

Underwriters Laboratories Inc.®

System No. W-L-3247

F Rating – 1 & 2 Hr (See Item 1)
T Rating – 3/4 Hr (See Item 1)

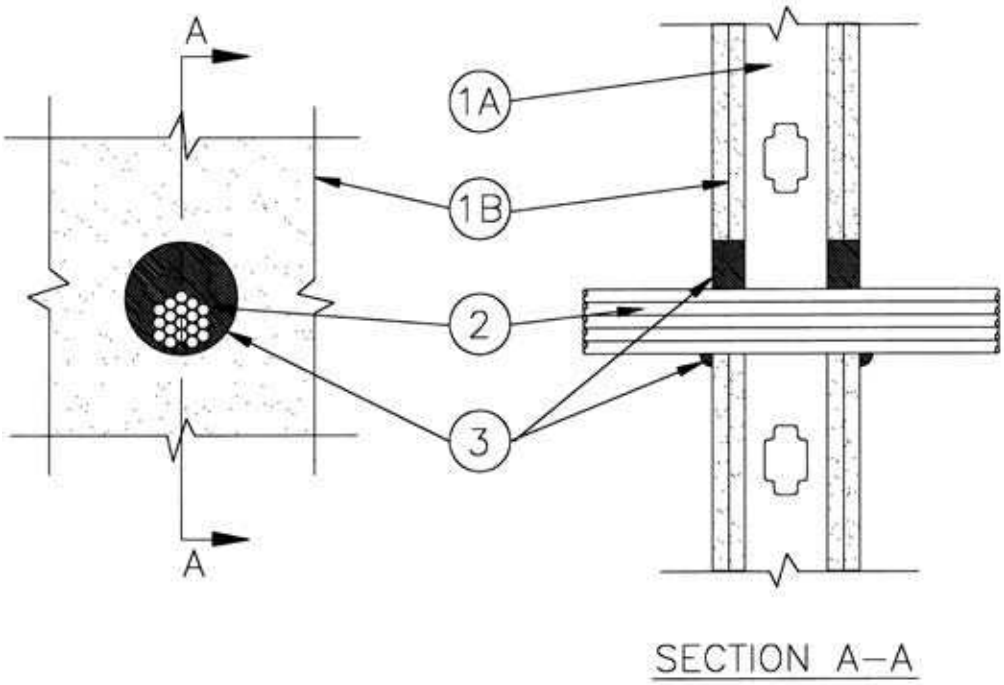

1. **Wall Assembly** – The 1 or 2 hr fire-rated gypsum wallboard/stud wall assembly shall be constructed of the materials and in the manner specified in the individual U300 or U400 Series Wall and Partition Designs in the UL Fire Resistance Directory and shall include the following construction features:
   - **a) Studs** – Wall framing may consist of either wood studs or steel channel studs. Wood studs to consist of nom 2 by 4 in. lumber spaced 16 in. OC. Steel studs to be min 3-5/8 in. wide and spaced max 24 in. OC.
   - **b) Gypsum Board*** – Thickness, type, number of layers and fasteners as specified in the individual Wall and Partition Design. Max diam of opening is 3-1/8 in.

   The hourly F Rating of the firestop system is equal to the hourly fire rating of the wall assembly in which it is installed. The T rating is 1/2 hr for 1 hr rated and 3/4 hr for 2 hr rated assemblies.
2. **Cables** – Aggregate cross-sectional area of cable in opening to be max 44 percent of the cross-sectional area of the opening. The annular space between cables and periphery shall be min 0 in. (point contact) to max 1-1/2 in. Cables to be rigidly supported on both sides of wall assembly. Any combination of the following types and sizes of copper conductor cables may be used:
   - **a)** 3/C No. 3/0 (or smaller) copper conductor polyvinyl chloride (PVC) jacketed aluminum clad or steel clad TEK cable with XLPE insulation
   - **b)** 2/C No. 10 AWG (or smaller) copper conductor PVC jacketed cable with XLPE insulation.
   - **c) Through Penetration Product*** – Max 3/C No. 2 AWG (or smaller) aluminum or steel clad **Armored Cable*** or aluminum or steel clad **Metal Clad Cable*** with copper conductors.
3. **Fill, Void or Cavity Material* – Sealant** – Min 5/8 or 1-1/4 in. thickness of fill material for 1 or 2 hr rated wall assemblies, respectively, applied within the annulus, flush with both surfaces of wall. Caulk to be forced into interstices of cable group to max extent possible. At the point contact location between cable(s) and gypsum board, a min 1/2 in. diam bead of fill material shall be applied at the gypsum board/cable interface on both surfaces of wall.

GRABBER CONSTRUCTION PRODUCTS INC – GrabberGard EFC

***Bearing the UL Classification Marking**

Underwriters Laboratories Inc.

FL0712

System No. W-L-3348

F Rating – 1 & 2 Hr (See Item 1B)
T Rating – 0 Hr

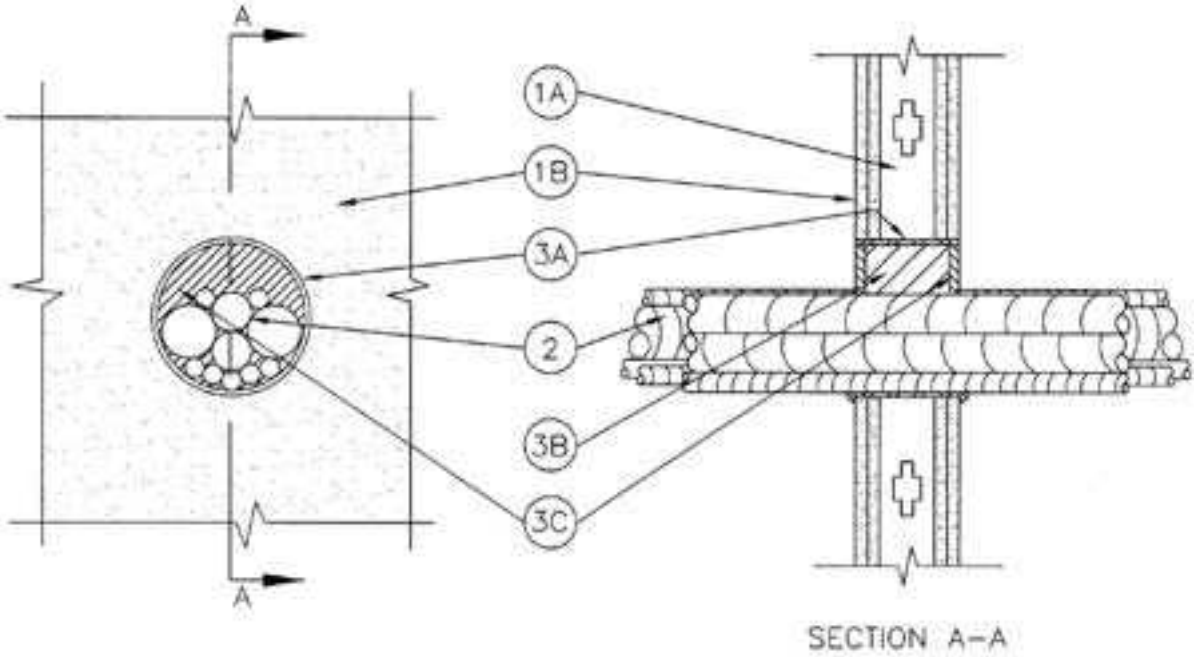

1. **Wall Assembly** – The 1 or 2 hr fire-rated gypsum wallboard/stud wall assembly shall be constructed of the materials and in the manner specified in the individual U300, U400 or V400 Series Wall and Partition Designs in the UL Fire Resistance Directory and shall include the following construction features:
   - **a) Studs** – Wall framing may consist of either wood studs or steel channel studs. Wood studs to consist of nom 2 in. by 4 in. (38 mm by 89 mm) lumber spaced max 16 in. (406 mm) OC. Steel studs to be min 3-5/8 in. (92 mm) wide and spaced max 24 in. (610 mm) OC.
   - **b) Gypsum Board*** – Thickness, type, number of layers and fasteners as specified in the individual Wall and Partition Design. Max diam of opening is 8-1/2 in. (216 mm).

   The F Rating of the firestop system is equal to the hourly fire rating of the wall assembly in which it is installed.
2. **Cables** – Aggregate cross sectional area of cables in opening to be max 27 percent of the cross sectional area of the opening. Cables installed either concentrically or eccentrically within the firestop system. The annular space between cables and periphery of sleeve shall be min 0 in. (point contact) to max 1-1/2 in. (38 mm). Cables to be rigidly supported on both sides of wall assembly. The following types and sizes of cables may be used:
   - **a)** 1/C 750 kcmil (or smaller) copper conductor aluminum clad or steel clad TEK cable with cross-linked polyethylene (XLPE) insulation, with or without PVC jacket.
   - **b)** 3/C 3 50 kcmil (or smaller) copper conductor aluminum clad or steel clad TEK cable with XLPE insulation, with or without PVC jacket
   - **c)** 4/C No. 14 AWG (or smaller) copper conductor aluminum clad or steel clad TEK cable with XLPE insulation, with or with out PVC jacket.
   - **d)** Max 25 pair No. 20 AWG (and smaller) copper conductor cable with XLPE/PVC insulation, with or without PVC jacket.
   - **e)** 1/C 400 kcmil (or smaller) aluminum or copper conductor cable with XLPE insulation, with or without PVC jacket.
   - **f)** 4/C No. 6 AWG (or smaller) copper conductor cable with XLPE insulation, with or without PVC jacket.
   - **g)** Through Penetrating Product* – Max 3/C No. 2 AWG (or smaller) aluminum or steel clad Armored Cable* or aluminum or steel clad Metal Clad Cable* with copper conductors.

ALFLEX CORP

3. **Firestop System** – The firestop system shall consist of the following:

a) Metallic Sleeve – (Optional) – Outside diam of sleeve to be tightly fitted with inside diam of opening, flush with both surfaces of wall assembly. The following metallic sleeves may be used:

a1) Sheet Metal Sleeve – Cylindrical sleeve fabricated from 24 gauge (or heavier) galv steel and having a min 1 in. (25 mm) overlap along longitudinal seam.

a2) Steel Sleeve – Max 8 in. (203 mm) diam (or smaller) Schedule 40 steel sleeve.

b) Packing Material – (Optional when sleeve is used) – Min 3-7/8 (92 mm) or 5-1/8 in. (130 mm) thickness of min 4 pcf (64 kg/m3) mineral wool batt insulation for 1 and 2 hr rated assemblies, respectively, approximately 25 percent larger than the area within the metallic sleeve cavity, firmly packed into opening. Packing material to be recessed from both surfaces of wall assembly to accommodate the required thickness of fill material (Item 3C).

c) Fill, Void or Cavity Material* – Sealant – Min 1/2 in. (13 mm) thickness of fill material applied within the annulus, flush with both surfaces of wall. At point contact location between metallic sleeve and cable, a min 1/2 in. (13 mm) diam bead of fill material shall be applied at the metallic sleeve or wallboard/cable interface on both surfaces of wall. Min 1/16 in. (1.6 mm) thick layer of fill material applied over edge of sleeve overlapping wallboard surface min 1/4 in. (6 mm).

GRABBER CONSTRUCTION PRODUCTS INC – GrabberGard IFC or GrabberGard EFC

***Bearing the UL Classification Marking**

System No. W-L-4046

F Rating – 1 & 2 Hr (See Item 1B)
T Rating – 3/4 Hr

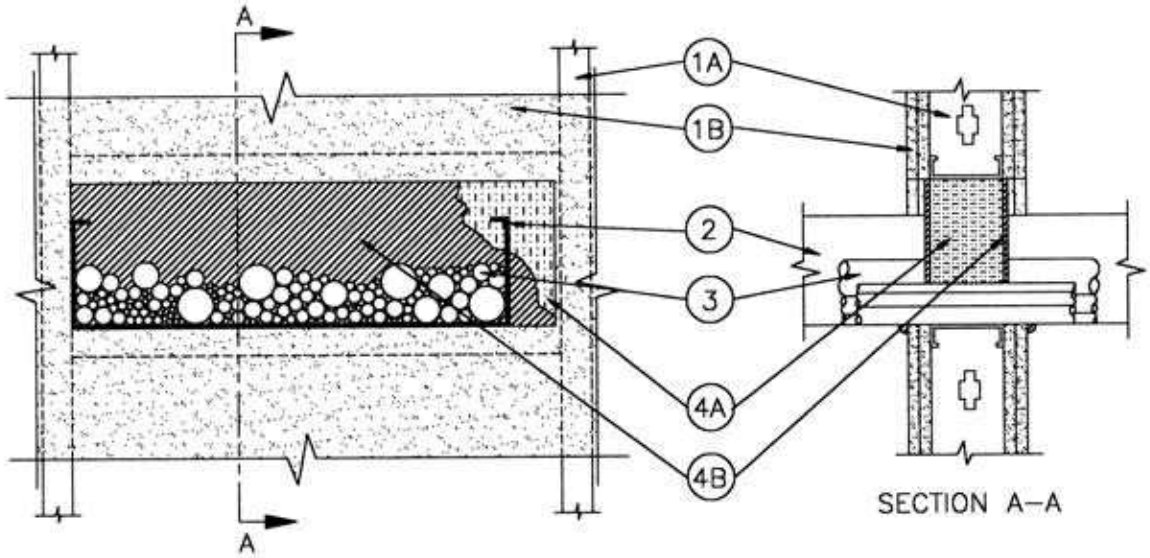

1. **Wall Assembly** – The 1 or 2 hr fire-rated gypsum wallboard/stud wall assembly shall be constructed of the materials and in the manner specified in the individual U300 or U400 Series Wall and Partition Designs in the UL Fire Resistance Directory and shall include the following construction features:
   - **a) Studs** – Wall framing may consist of either wood studs or steel channel studs. Wood studs to consist of nom 2 by 4 in. lumber spaced 16 in. OC. Steel studs to be min 3-5/8 in. wide and spaced max 24 in. OC. Additional framing members may be installed in stud cavity containing cable tray (Item2) to form a rectangular box around cable tray.
   - **b) Wallboard, Gypsum*** – Thickness, type, number of layers and fasteners, as specified in the individual Wall and Partition Design. Max opening size to be 26 in. by 8 in. (208 sq. in.).

   The hourly F Rating of the firestop system is equal to the hourly F Rating of the wall assembly in which it is installed.
2. **Cable Tray+** – Max 24 in. wide by max 6 in. deep 15 ga. (or heavier) aluminum or steel cable tray installed within the opening. The annular space between the cable tray and periphery of the opening shall be min 0 in. (point contact) to max 2 in. Cable tray to be rigidly supported on both sides of wall assembly.
3. **Cables** – Aggregate cross-sectional area of cables in cable tray to be max 40 percent of the cross-sectional area of the opening. The annular space between cables and periphery of opening shall be min 0 in. (point contact) to max 5-3/4 in. Cables to be rigidly supported on both sides of wall assembly. Any combination of the following types and sizes of cables may be used:
   - **a)** 1/C 750 kcmil (or smaller) copper conductor polyvinyl chloride (PVC) jacketed aluminum clad or steel clad TEK cable with cross-linked polyethylene (XLPE) insulation.
   - **b)** 3/C 350 kcmil (or smaller) copper conductor PVC jacketed aluminum clad or steel clad TEK cable with XLPE insulation.
   - **c)** 4/C No. 14 AWG (or smaller) copper conductor PVC jacketed aluminum clad or steel clad TEK cable with XLPE insulation.
   - **d)** Max 25 pair No. 20 AWG (or smaller) copper conductor PVC jacketed cable with PVC insulation.
   - **e)** 1/C 400 kcmil (or smaller) aluminum or copper conductor cable with XLPE insulation.
   - **f)** 4/C No. 6 AWG (or smaller) copper conductor PVC jacketed cable with XLPE insulation.

W-L-4046

1. **Firestop System** – The firestop system shall consist of the following:

   a) Packing Material – Min 3-5/8 in. thickness of min 4 pcf mineral wool batt insulation firmly packed into opening as a permanent form. Packing material to be installed flush with both sides of studs (Item 1A). Packing material to be recessed from both surfaces of wall as required to accommodate the required thickness of fill material (Items B1 and B2).

   b1) Fill, Void or Cavity Material* – Sealant – Min 1/8 in. thickness of fill material sprayed or brushed on each side of wall assembly, completely covering mineral wool insulation, overlapping a min 1/2 in. onto wallboard, cable tray and cables. At point contact location between penetrant and periphery of opening, a min 1/2 in. overlap of fill material shall be applied at the penetrant and gypsum board on both surfaces of wall assembly.

   GRABBER CONSTRUCTION PRODUCTS INC – GrabberGard EFS

   b2) Fill, Void or Cavity Material* – Sealant – As an alternative to Item B1, min 1/4 in. thickness of fill material applied within annulus, flush with both surfaces of wall. At point contact location between penetrant and periphery of opening, a min 1/2 in. diam bead of fill material shall be applied at the gypsum board/penetrant interface on both surfaces of wall assembly.

   GRABBER CONSTRUCTION PRODUCTS INC – GrabberGard IFC

***Bearing the UL Classification Marking**
+Bearing the UL Listing Marking

System No. W-L-4047

F Rating – 1 & 2 Hr (See Item 1B)
T Rating – 3/4 Hr

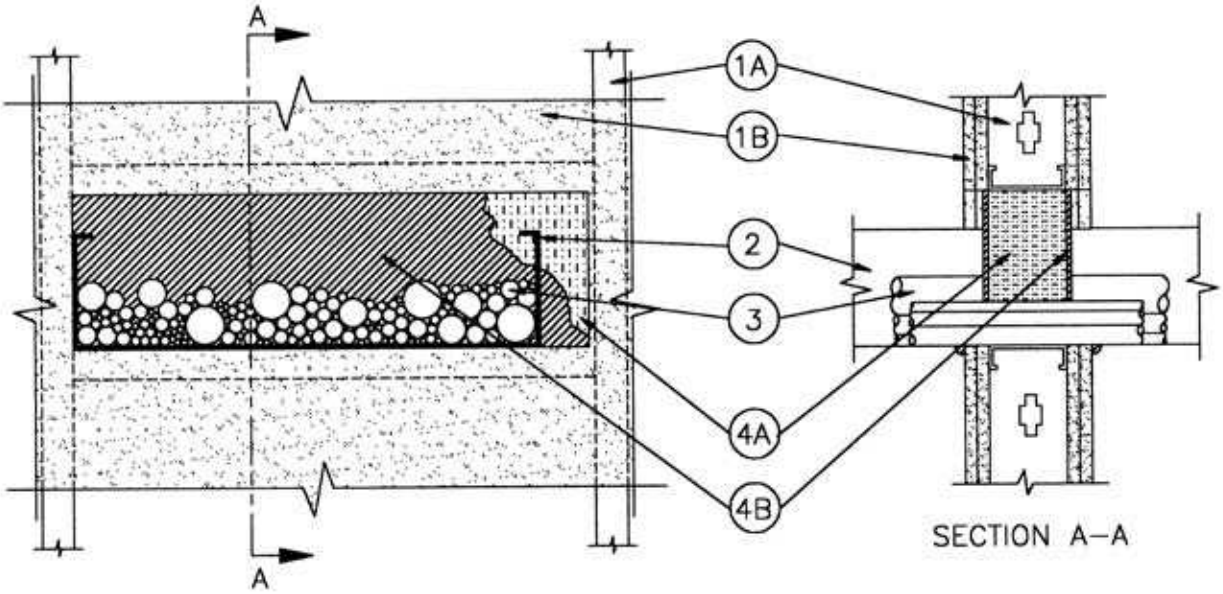

1. **Wall Assembly** – The 1 or 2 hr fire-rated gypsum wallboard/stud wall assembly shall be constructed of the materials and in the manner specified in the individual U300 or U400 Series Wall and Partition Designs in the UL Fire Resistance Directory and shall include the following construction features:
   - **a) Studs** – Wall framing may consist of either wood studs or steel channel studs. Wood studs to consist of nom 2 by 4 in. lumber spaced 16 in. OC. Steel studs to be min 3-5/8 in. wide and spaced max 24 in. OC. Additional framing members may be installed in stud cavity containing cable tray (Item2) to form a rectangular box around cable tray.
   - **b) Wallboard, Gypsum*** – Thickness, type, number of layers and fasteners, as specified in the individual Wall and Partition Design. Max opening size to be 26 in. by 8 in. (208 sq. in.).

   The hourly F Rating of the firestop system is equal to the hourly F Rating of the wall assembly in which it is installed.
2. **Cable Tray+** – Max 24 in. wide by max 6 in. deep 15 ga. (or heavier) aluminum or steel cable tray installed within the opening. The annular space between the cable tray and periphery of the opening shall be min 0 in. (point contact) to max 2 in. Cable tray to be rigidly supported on both sides of wall assembly.
3. **Cables** – Aggregate cross-sectional area of cables in cable tray to be max 40 percent of the cross-sectional area of the opening. The annular space between cables and periphery of opening shall be min 0 in. (point contact) to max 5-3/4 in. Cables to be rigidly supported on both sides of wall assembly. Any combination of the following types and sizes of cables may be used:
   - **a)** 1/C 750 kcmil (or smaller) copper conductor polyvinyl chloride (PVC) jacketed aluminum clad or steel clad TEK cable with cross-linked polyethylene (XLPE) insulation.
   - **b)** 3/C 350 kcmil (or smaller) copper conductor PVC jacketed aluminum clad or steel clad TEK cable with XLPE insulation.
   - **c)** 4/C No. 14 AWG (or smaller) copper conductor PVC jacketed aluminum clad or steel clad TEK cable with XLPE insulation.
   - **d)** Max 25 pair No. 20 AWG (or smaller) copper conductor PVC jacketed cable with PVC insulation.
   - **e)** 1/C 400 kcmil (or smaller) aluminum or copper conductor cable with XLPE insulation.
   - **f)** 4/C No. 6 AWG (or smaller) copper conductor PVC jacketed cable with XLPE insulation.

W-L-4047

4. **Firestop System** – The firestop system shall consist of the following:

a) **Packing Material** – Min 3-5/8 in. thickness of min 4 pcf mineral wool batt insulation firmly packed into opening as a permanent form. Packing material to be recessed from both surfaces of wall as required to accommodate the required thickness of fill material (Items 4B).

b) **Fill, Void or Cavity Material* – Sealant** – Min 1/4 in. thickness of fill material applied within annulus, flush with both surfaces of wall. At point contact location between penetrant and periphery of opening, a min 1/2 in. diam bead of fill material shall be applied at the gypsum board/penetrant interface on both surfaces of wall assembly.

GRABBER CONSTRUCTION PRODUCTS INC – GrabberGard EFC

***Bearing the UL Classification Marking**
+Bearing the UL Listing Marking

System No. W-L-5217

F Rating – 1 & 2 Hr (See Item 1)
T Rating – 1/2, 1 & 2 Hr (See Item 3)

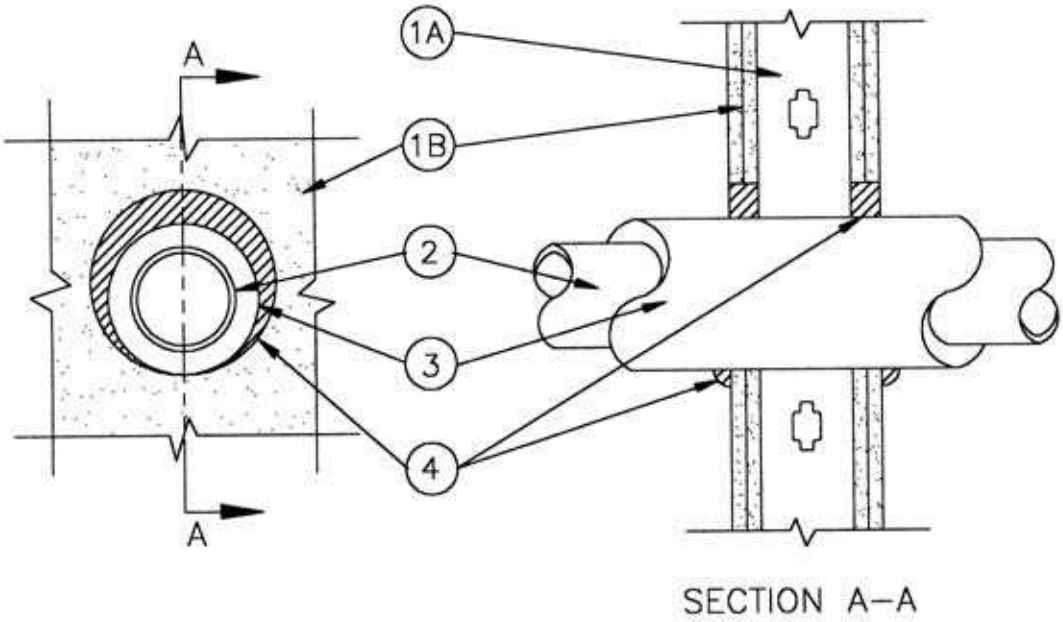

1. **Wall Assembly** – The 1 or 2 hr fire-rated gypsum wallboard/stud wall assembly shall be constructed of the materials and in the manner specified in the individual U300 or U400 Series Wall and Partition Designs in the UL Fire Resistance Directory and shall include the following construction features:
   - **a) Studs** – Wall framing may consist of either wood studs or steel channel studs. Wood studs to consist of nom 2 by 4 in. lumber spaced 16 in. OC. Steel studs to be min 3-5/8 in. wide and spaced max 24 in. OC.
   - **b) Gypsum Board*** – Nom 5/8 in. by 4 ft. wide with square or tapered edges. The gypsum wallboard type, number of layers, and fastener type and sheet orientation shall be as specified in the individual Wall and Partition Design. Max diam of opening is 7-1/2 in.

   The hourly F Rating of the firestop system is equal to the hourly fire rating of the wall assembly in which it is installed.
2. **Through Penetrants** – One metallic pipe or tubing to be centered within the firestop system. Pipe or tubing to be rigidly supported on both sides of wall assembly. The following types and sizes of metallic pipes and tubing may be used:
   - **a) Steel Pipe** – Nom 4 in. diam (or smaller) Schedule 40 (or heavier) steel pipe
   - **b) Iron Pipe** – Nom 4 in. diam (or smaller) cast or ductile iron pipe
   - **c) Copper Tubing** – Nom 2 in. diam (or smaller) Type L (or heavier) copper tube
   - **d) Copper Pipe** – Nom 2 in. diam (or smaller) Regular (or heavier) copper pipe

W-L-5217

1. **Tube Insulation – Plastic+** – Nom 1/2 or 3/4 in. thick acrylonitrile butadiene/polyvinyl chloride (AB/PVC) flexible foam furnished in the form of tubing. The annular space between tube insulation and the periphery of opening shall be min 0 in. (point contact) to max 1 in.
   See Plastics+ (QMFZ2) category in the Recognized Component Directory for names of manufacturers. Any Recognized Component tube insulation material meeting the above specifications and having a UL 94 Flammability Classification of 94-5VA may be used.
   The T Rating is dependant on the hourly F Rating, type of penetrant and thickness of insulation, as shown below.

F Rating	Penetrant	Insulation Thickness, Inches	T Rating
1 Hr	A and B	1/2	1/2 Hr
1 Hr	A and B	3/4	1 Hr
1 Hr	C and D	1/2 and 3/4	1/2 Hr
2 Hr	A and B	1/2	1/2 Hr
2 Hr	A and B	3/4	1 Hr
2 Hr	C and D	1/2 and 3/4	1/2 Hr

2. **Fill, Void or Cavity Material* – Sealant** – Min 5/8 in. or 1-1/4 in. thickness of fill material applied within the annulus, flush with both surfaces of wall, for 1 and 2 hr. rated assemblies, respectively. At the point contact location between insulation/wallboard interface, a min. 1/2 in. diam bead of fill material shall be applied on both sides of wall.

GRABBER CONSTRUCTION PRODUCTS INC – GrabberGard IFC

***Bearing the UL Classification Mark**

System No. W-L-5218

F Rating – 1, 2, 3 & 4 Hr (See Item 1)
T Rating – 1, 2 and 3 Hr (See Item 1)

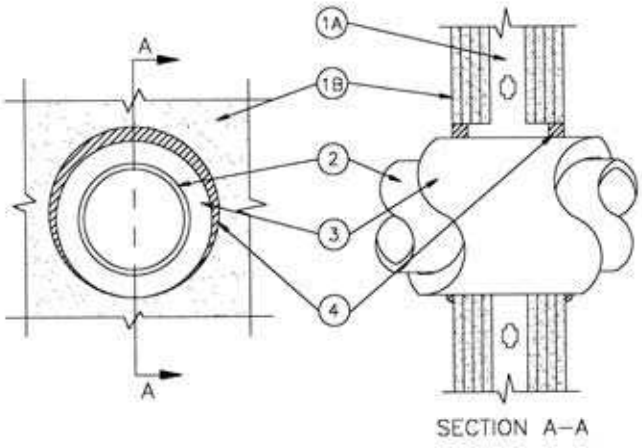

1. **Wall Assembly** – The 1, 2, 3 or 4 hr fire-rated gypsum board/stud wall assembly shall be constructed of the materials and in the manner specified in the individual U300, U400 or V400 Series Wall and Partition Designs in the UL Fire Resistance Directory and shall include the following construction features:
   - **a) Studs** – Wall framing may consist of either wood studs or steel channel studs. Wood studs to consist of nom 2 by 4 in. (51 by 102 mm) lumber spaced 16 in. (406 mm) OC. Steel studs to be min 3-5/8 in. (92 mm) wide and spaced max 24 in. (610 mm) OC.
   - **b) Gypsum Board*** – Thickness, type, number of layers and fasteners, as specified in the individual Wall and Partition Design. Max diam of opening is 18 in. (457 mm).

   The hourly T Rating is 1 hr. for 1 hr. rated assemblies. The hourly T Rating is 2 hr. for 2 and 3 hr rated assemblies. The hourly T Rating is 3 hr. for 4 hr. rated assemblies.
2. **Through Penetrants** – One metallic pipe or tubing to be installed either concentrically or eccentrically within the firestop system. Pipe or tubing to be rigidly supported on both sides of wall assembly. The following types and sizes of metallic pipes or tubing may be used:
   - **a) Steel Pipe** – Nom 12 in. (305 mm) diam (or smaller) Schedule 40 (or heavier) steel pipe.
   - **b) Iron Pipe** – Nom 12 in. (305 mm) diam (or smaller) cast or ductile iron pipe.
   - **c) Copper Tubing** – Nom 4 in. (102 mm) diam (or smaller) Type L (or heavier) copper tubing.
   - **d) Copper Pipe** – Nom 4 in. (102 mm) diam (or smaller) Regular (or heavier) copper pipe.
3. **Pipe Covering*** – Nom 2 in. (51 mm) thick hollow cylindrical heavy density (min 3.5 pcf or 64 kg/m3) glass fiber units jacketed on the outside with an all service jacket. Longitudinal joints sealed with metal fasteners or factory-applied self-sealing lap tape. Transverse joints secured with metal fasteners or with butt tape supplied with the product. The annular space between the insulated pipe and the edge of the through opening shall be min 0 in. (point contact) to max 1-1/4 in. (32 mm).

   See Pipe and Equipment Covering – Materials (BRGU) category in the Building Materials Directory for names of manufacturers. Any pipe covering material meeting the above specifications and bearing the UL Classification Marking with a Flame Spread Index of 25 or less and a Smoke Developed Index of 50 or less may be used.
4. **Fill, Void or Cavity Material* – Sealant** – Min 5/8 in. (16 mm) thickness of fill material for 1 hr fire rated wall assemblies and min 1 in. (25 mm) thickness of fill material for 2, 3 and 4 hr fire rated wall assemblies, applied within the annulus, flush with both surfaces of wall. At the point contact location between pipe covering and gypsum board, a min 1/2 in. (13 mm) diam bead of fill material shall be applied at the gypsum board/pipe covering interface on both surfaces of wall.

GRABBER CONSTRUCTION PRODUCTS INC. – GrabberGard IFC

***Bearing the UL Classification Marking**

FL0712

Underwriters Laboratories Inc.®

System No. W-L-5219

F Rating – 1 & 2 Hr (See Item 1)
T Rating – 1/2, 1 & 2 Hr (See Item 3)

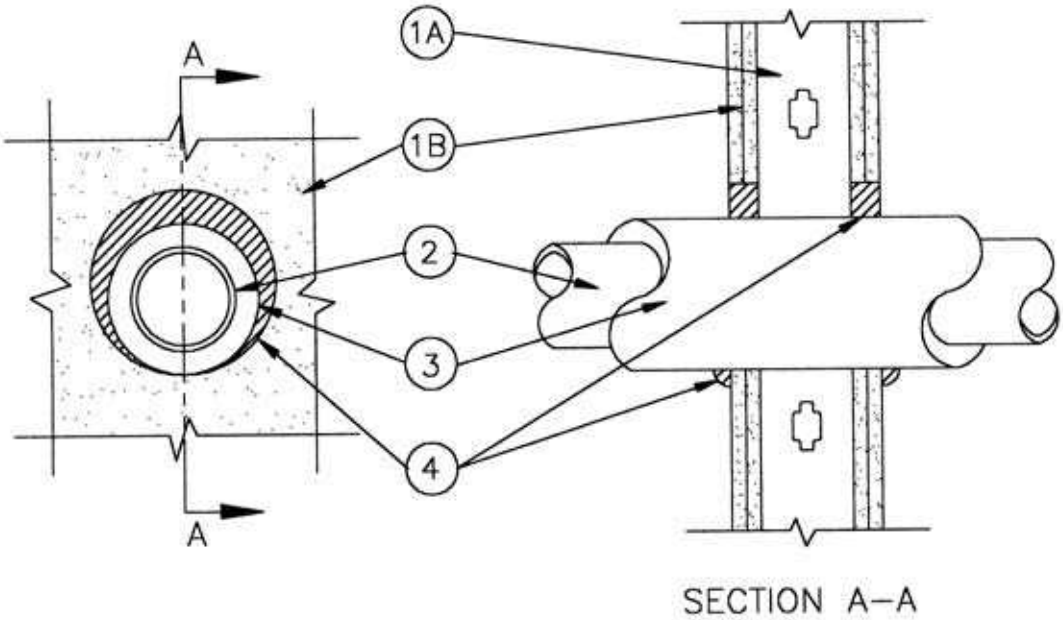

1. **Wall Assembly** – The 1 or 2 hr fire-rated gypsum board/stud wall assembly shall be constructed of the materials and in the manner specified in the individual U300 or U400 Series Wall and Partition Designs in the UL Fire Resistance Directory and shall include the following construction features:
   - **a) Studs** – Wall framing may consist of either wood studs or steel channel studs. Wood studs to consist of nom 2 by 4 in. lumber spaced 16 in. OC. Steel studs to be min 3-5/8 in. wide and spaced max 24 in. OC.
   - **b) Gypsum Board*** – Nom 5/8 in. by 4 ft. wide with square or tapered edges. The gypsum board type, number of layers, and fastener type and sheet orientation shall be as specified in the individual Wall and Partition Design. Max diam of opening is 7-1/2 in.

   The hourly F Rating of the firestop system is equal to the hourly fire rating of the wall assembly in which it is installed.
2. **Through Penetrants** – One metallic pipe or tubing to be centered within the firestop system. Pipe or tubing to be rigidly supported on both sides of wall assembly. The following types and sizes of metallic pipes and tubing may be used:
   - **a) Steel Pipe** – Nom 4 in. diam (or smaller) Schedule 40 (or heavier) steel pipe
   - **b) Iron Pipe** – Nom 4 in. diam (or smaller) cast or ductile iron pipe
   - **c) Copper Tubing** – Nom 2 in. diam (or smaller) Type L (or heavier) copper tube
   - **d) Copper Pipe** – Nom 2 in. diam (or smaller) Regular (or heavier) copper pipe

W-L-5219

3. **Tube Insulation – Plastic+** – Nom 1/2 or 3/4 in. thick acrylonitrile butadiene/polyvinyl chloride (AB/PVC) flexible foam furnished in the form of tubing. The annular space between tube insulation and the periphery of opening shall be min 0 in. (point contact) to max 1 in.
   See **Plastics+** (QMFZ2) category in the Recognized Component Directory for names of manufacturers. Any Recognized Component tube insulation material meeting the above specifications and having a UL 94 Flammability Classification of 94-5VA may be used.
   The T Rating is dependant on the hourly F Rating, type of penetrant and thickness of insulation, as shown below.

F Rating	Penetrant	Insulation Thickness, Inches	T Rating
1 Hr	A and B	1/2	1/2 Hr
1 Hr	A and B	3/4	1 Hr
1 Hr	C and D	1/2 and 3/4	1/2 Hr
2 Hr	A and B	1/2	1/2 Hr
2 Hr	A and B	3/4	1 Hr
2 Hr	C and D	1/2 and 3/4	1/2 Hr

4. **Fill, Void or Cavity Material* – Sealant** – Min 5/8 in. or 1-1/4 in. thickness of fill material applied within the annulus, flush with both surfaces of wall, for 1 and 2 hr. rated assemblies, respectively. At the point contact location between insulation/gypsum board interface, a min. 1/2 in. diam bead of fill material shall be applied on both sides of wall.

GRABBER CONSTRUCTION PRODUCTS INC – GrabberGard EFC

***Bearing the UL Classification Mark**

System No. W-L-7107

F Rating – 1 & 2 Hr (See Item 1)
T Rating – 0 Hr

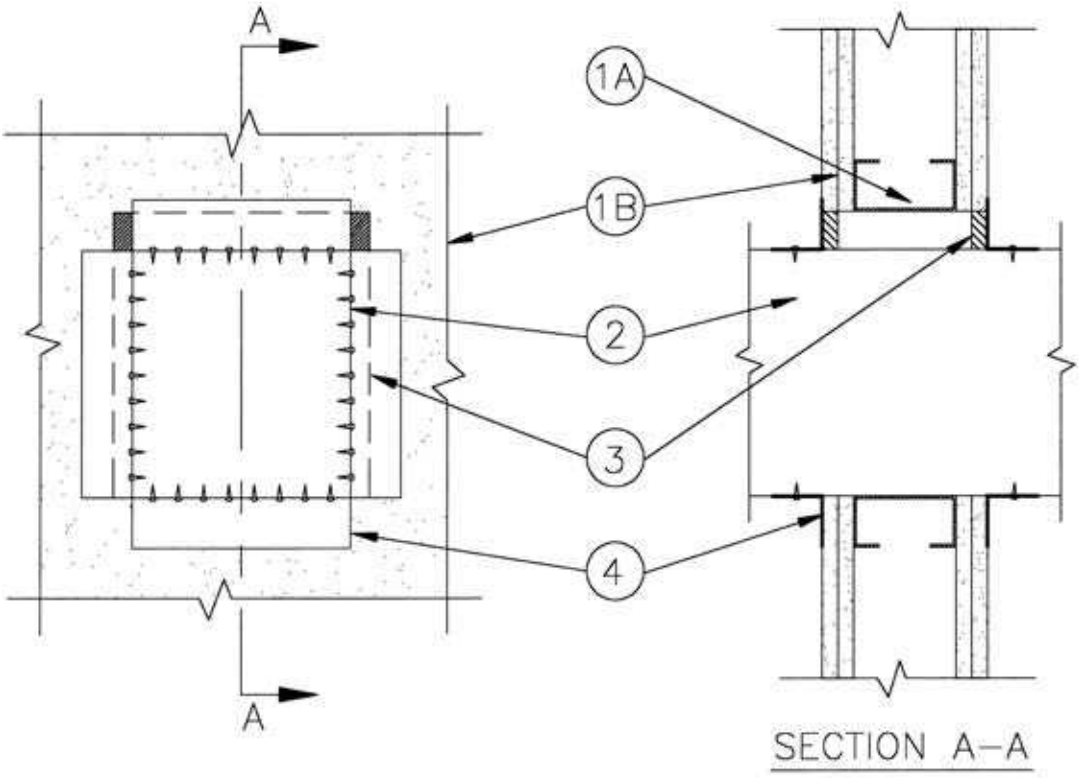

1. **Wall Assembly** – The 1 and 2 hr fire rated gypsum board/stud wall assembly shall be constructed of the materials and in the manner specified in the individual U400 Series Wall and Partition Designs in the UL Fire Resistance Directory and shall include the following construction features:
   - **a) Studs** – Wall framing shall consist of steel channel studs to be min 3-5/8 in. wide and spaced max 24 in. OC. Additional 3-5/8 in. wide steel studs shall be used to completely frame opening.
   - **b) Gypsum Board*** – Thickness, type, number of layers and fasteners as required in the individual Wall and Partition Design. Max size of opening to be 957 sq in. with a max dimension of 33 in.

   The hourly F Rating of the firestop system is equal to the hourly fire rating of the wall assembly in which it is installed.
2. **Through-Penetrant** – Nom 26 in. by 30 (or smaller) No. 24 gauge (or heavier) galv steel duct to be installed either concentrically or eccentrically within the firestop system. An annular space of min 0 in. (point contact) to max 1-1/2 in. is required within the firestop system. Steel duct to be rigidly supported on both sides of wall assembly.
3. **Fill, Void or Cavity Material* – Sealant** – Min 5/8 in. thickness of fill material applied within annulus, flush with both surfaces of wall assembly. At the point contact location between duct and gypsum board, a min 1/4 in. diam bead of sealant shall be applied at the gypsum board/duct interface on both surfaces of wall assembly.

GRABBER CONSTRUCTION PRODUCTS INC – GrabberGard IFC

4. **Retaining Angles** – Min 16 gauge galv steel angles sized to lap duct a min of 2 in. and lap wall surfaces of a min of 1 in. Angles attached to duct on both sides of wall with min 1/2 in. long, No. 10 (or larger) sheet metal screws spaced a max of 1 in. from each end of duct and spaced a max of 6 in. OC.

***Bearing the UL Classification Marking**

System No. W-L-7108

F Rating – 1 & 2 Hr (See Item 1)
T Rating – 0 Hr

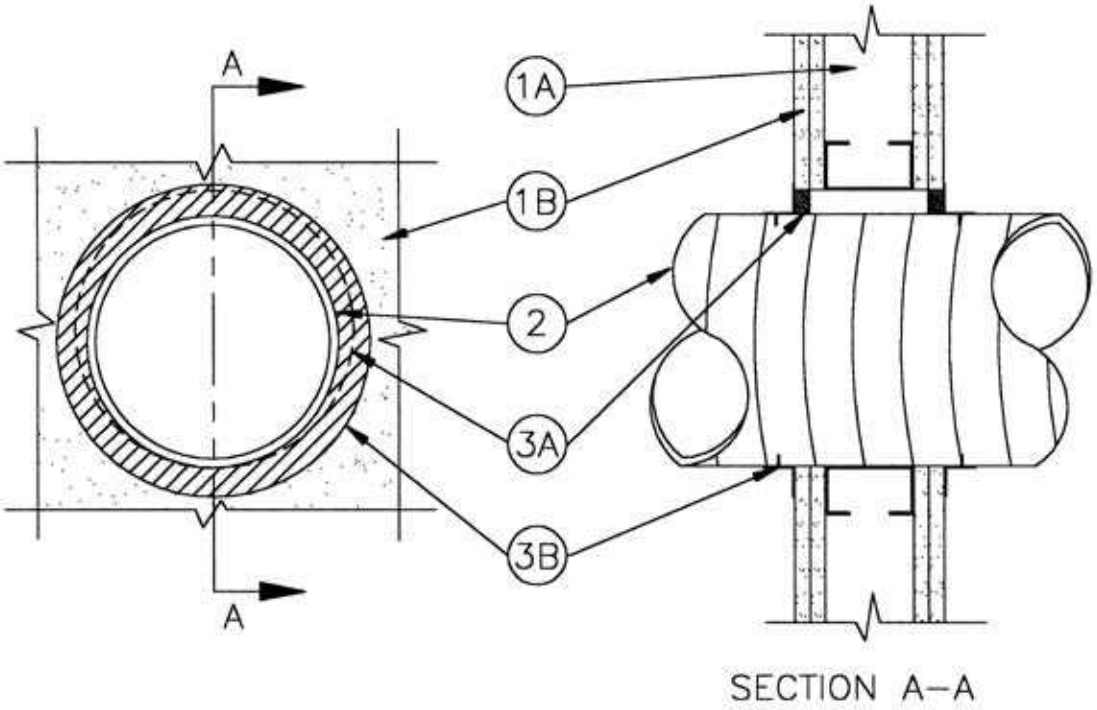

1. **Wall Assembly** – The 1 or 2 hr fire rated gypsum board/stud wall assembly shall be constructed of the materials and in the manner specified in the individual U400 Series Wall and Partition Designs in the UL Fire Resistance Directory and shall include the following construction features:

   a) Studs – Wall framing may consist of either wood or steel channel studs. Wood studs to consist of nom 2 by 4 in. lumber spaced 16 in. OC. Steel studs to be min 2-1/2 in. wide and spaced max 24 in. OC. Additional studs shall be used to completely frame opening.

   b) Gypsum Board* – Thickness, type, number of layers and fasteners as required in the individual Wall and Partition Design. Max diam of opening is 17 in.

   The hourly F Rating of the firestop system is equal to the hourly fire rating of the wall assembly in which it is installed.

2. **Steel Duct** – Nom 16 in. (or smaller) No. 22 gauge (or heavier) steel duct to be installed either concentrically or eccentrically within the firestop system. The annular space between duct and periphery of opening shall be min 0 in. (point contact) to max 1 in. Duct to be rigidly supported on both sides of wall assembly.

3. **Firestop System** – The firestop system shall consist of the following:

   a) Fill, Void or Cavity Material* – Sealant – Min 5/8 in. or 1-1/4 in. thickness of fill material applied within annulus, flush with both surfaces of wall for 1 and 2 hr walls, respectively. At the point contact location between duct and gypsum board, a min 1/4 in. diam bead of sealant shall be applied at the gypsum board/duct interface on both surfaces of wall assembly.

   GRABBER CONSTRUCTION PRODUCTS INC – GrabberGard IFC

   b) Retaining Angles – Min 16 gauge galv steel angles roll-formed and sized to lap duct a min of 1 in. and lap wall surfaces a min of 1 in. Angles attached to duct on both sides of wall with min 1/2 in. long, No. 10 (or larger) sheet metal screws spaced a max of 6 in. OC.

***Bearing the UL Classification Marking**

System No. W-L-7109

F Rating – 1 & 2 Hr (See Item 1)
T Rating – 0 Hr

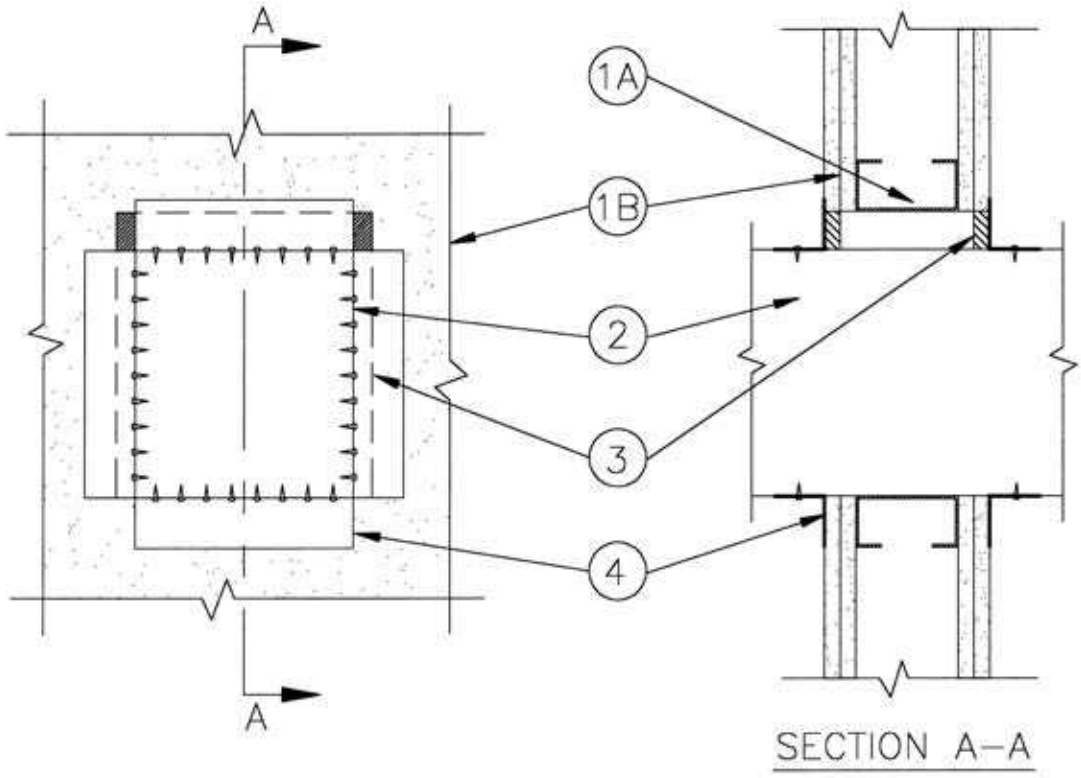

1. **Wall Assembly** – The 1 and 2 hr fire rated gypsum board/stud wall assembly shall be constructed of the materials and in the manner specified in the individual U400 Series Wall and Partition Designs in the UL Fire Resistance Directory and shall include the following construction features:
   - **a) Studs** – Wall framing shall consist of steel channel studs to be min 3-5/8 in. wide and spaced max 24 in. OC. Additional 3-5/8 in. wide steel studs shall be used to completely frame opening.
   - **b) Gypsum Board*** – Thickness, type, number of layers and fasteners as required in the individual Wall and Partition Design. Max size of opening to be 957 sq in. with a max dimension of 33 in.

   The hourly F Rating of the firestop system is equal to the hourly fire rating of the wall assembly in which it is installed.
2. **Through-Penetrant** – Nom 26 in. by 30 (or smaller) No. 24 gauge (or heavier) galv steel duct to be installed either concentrically or eccentrically within the firestop system. An annular space of min 0 in. (point contact) to max 1-1/2 in. is required within the firestop system. Steel duct to be rigidly supported on both sides of wall assembly.
3. **Fill, Void or Cavity Material* – Sealant** – Min 5/8 in. thickness of fill material applied within annulus, flush with both surfaces of wall assembly. At the point contact location between duct and gypsum board, a min 1/4 in. diam bead of sealant shall be applied at the gypsum board/duct interface on both surfaces of wall assembly.

   GRABBER CONSTRUCTION PRODUCTS INC – GrabberGard EFC
4. **Retaining Angles** – Min 16 gauge galv steel angles sized to lap duct a min of 2 in. and lap wall surfaces of a min of 1 in. Angles attached to duct on both sides of wall with min 1/2 in. long, No. 10 (or larger) sheet metal screws spaced a max of 1 in. from each end of duct and spaced a max of 6 in. OC.

***Bearing the UL Classification Marking**

Underwriters Laboratories Inc.

FL0712

System No. W-L-7110

F Rating – 1 & 2 Hr (See Item 1)
T Rating – 0 Hr

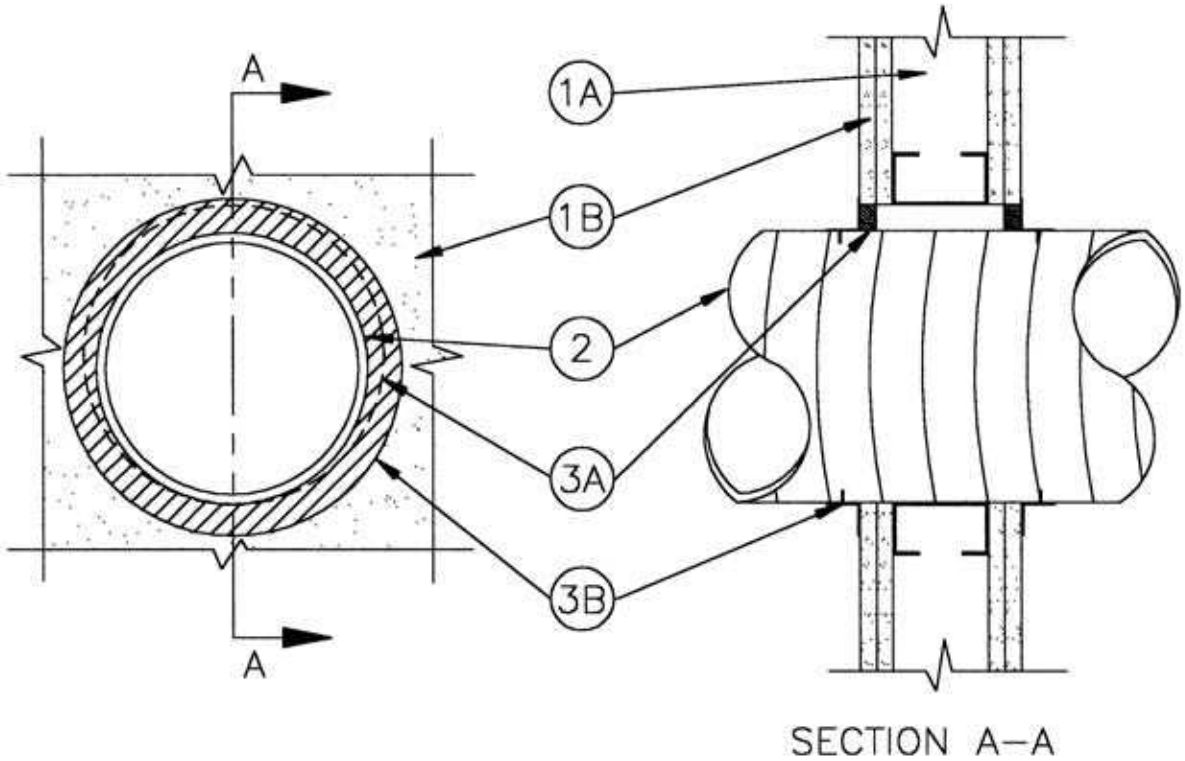

1. **Wall Assembly** – The 1 or 2 hr fire rated gypsum board/stud wall assembly shall be constructed of the materials and in the manner specified in the individual U400 Series Wall and Partition Designs in the UL Fire Resistance Directory and shall include the following construction features:
   - **a) Studs** – Steel studs to be min 2-1/2 in. wide and spaced max 24 in. OC. Additional studs shall be used to completely frame opening.
   - **b) Gypsum Board*** – Thickness, type, number of layers and fasteners as required in the individual Wall and Partition Design. Max diam of opening is 17 in.

   The hourly F Rating of the firestop system is equal to the hourly fire rating of the wall assembly in which it is installed.
2. **Steel Duct** – Nom 16 in. (or smaller) No. 22 gauge (or heavier) steel duct to be installed either concentrically or eccentrically within the firestop system. The annular space between duct and periphery of opening shall be min 0 in. (point contact) to max 1 in. Duct to be rigidly supported on both sides of wall assembly.
3. **Firestop System** – The firestop system shall consist of the following:
   - **a) Fill, Void or Cavity Material* – Sealant** – Min 5/8 in. or 1-1/4 in. thickness of fill material applied within annulus, flush with both surfaces of wall for 1 and 2 hr walls, respectively. At the point contact location between duct and gypsum board, a min 1/4 in. diam bead of sealant shall be applied at the gypsum board/duct interface on both surfaces of wall assembly.

     GRABBER CONSTRUCTION PRODUCTS INC – GrabberGard EFC
   - **b) Retaining Angles** – Min 16 gauge galv steel angles roll-formed and sized to lap duct a min of 1 in. and lap wall surfaces a min of 1 in. Angles attached to duct on both sides of wall with min 1/2 in. long, No. 10 (or larger) sheet metal screws spaced a max of 6 in. OC.

***Bearing the UL Classification Marking**

FL0712

Underwriters Laboratories Inc.®

Understanding a Underwriters Laboratories (UL) Joint Firestop Listing (XHBN & XHDG Systems).

UL uses an Alpha-alphanumeric identification system can be used to help identify the correct joint firestop system to select.

The Alpha component is used to identify the assembly type being penetrated, as the Numerical component is used to identify the penetration type.

First Two Alpha Characters Identify Joint Type

BW	=	signifies bottom-of-wall
CG	=	signifies wall-to-wall joints intended for use as corner guards
CW	=	signifies perimeter fire containment (curtain wall)
HW	=	signifies head-of-wall
FF	=	signifies floor-to-floor
FW	=	signifies floor-to-wall
WW	=	signifies wall-to-wall

Third Alpha Characters Identify Joint Movement Capabilities

S	=	signifies static joint - no movement
D	=	signifies dynamic joint - movement

Numeric Component Identifies Joint Width

0000-0999	=	Less than or equal to 2 in.
1000-1999	=	Greater than 2 in. and less than or equal to 6 in.
2000-2999	=	Greater than 6 in. and less than or equal to 12 in.
3000-3999	=	Greater than 12 in. and less than or equal to 24 in.
4000-4999	=	Greater than 24 in.

FL0712

System No. BW-S-0009

Assembly Ratings 1 & 2 Hr (See Item 2)
Nominal Joint Width – 3/4 in.

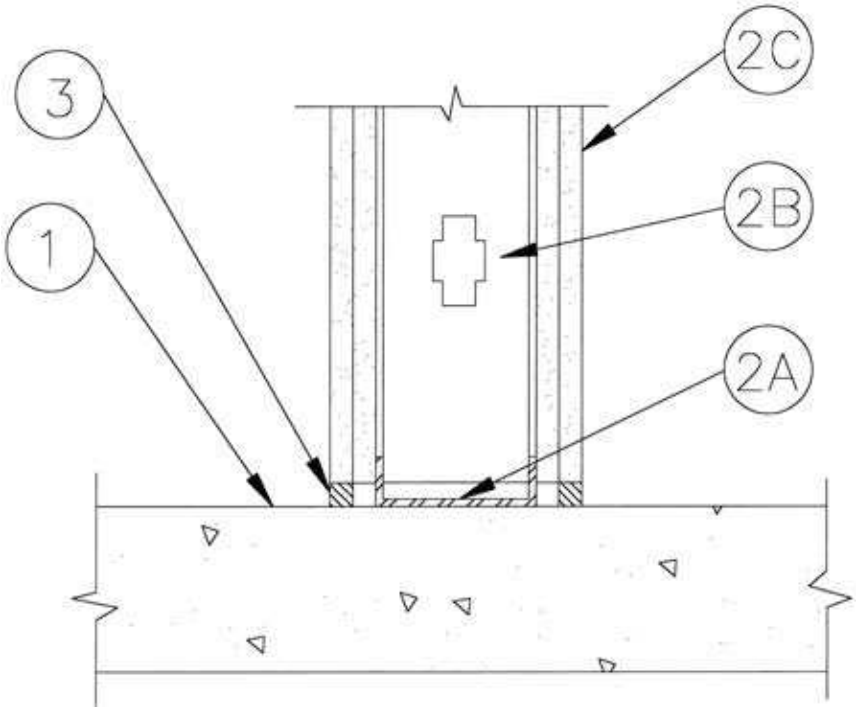

1. **Floor Assembly** – Min 4-1/2 in. thick reinforced lightweight or normal weight (100-150 pcf) structural concrete. Floor may also be constructed of any 6 in. thick UL Classified hollow-core **Precast Concrete Units***.
   See **Precast Concrete** Units category in the Fire Resistance Directory for names of manufactures.

2. **Wall Assembly** – The 1 or 2 hr fire-rated gypsum board/steel stud wall assembly shall be constructed of the materials and in the manner specified in the individual U400 or V400 Series Wall or Partition Design in the UL Fire Resistance Directory. In addition, the wall may incorporate a head-of-wall joint system constructed as specified in the HW Series Joint Systems in the UL Fire Resistance Directory. The wall shall include the following construction features:
   - **a) Steel Floor Runner** – Floor runners of wall assembly shall consist of min No. 25 gauge galv steel channels sized to accommodate steel studs (Item 2B). Floor runners to be provided with min 1-1/4 in. flanges. Runners secured with steel fasteners spaced 12 in. OC.
   - **b) Studs** – Steel studs to be min 2-1/2 in. wide. Studs cut 1/2 to 3/4 in. less in length than assembly height with bottom nesting in, resting on and fastened to floor runner with sheet metal screws. Stud spacing not to exceed 24 in. OC.
   - **c) Gypsum Board*** – Gypsum board installed to a min total thickness of 5/8 or 1-1/4 in. on each side of wall for a 1 or 2 hr rated wall, receptively. Wall to be constructed as specified in the individual U400 or V400 Series Design in the UL Fire Resistance Directory, except that a max 3/4 in. gap shall be maintained between the bottom of gypsum board and top of concrete floor.

   The hourly fire rating of the joint system is equal to the hourly fire rating of the wall.

3. **Fill, Void or Cavity Material* – Sealant – Max separation between top of floor and bottom of gypsum board is 3/4 in.** Min 5/8 in. thickness of fill material installed on each side of the wall between the bottom of the gypsum board and the top of the concrete floor, flush with each surface of the wall.

GRABBER CONSTRUCTION PRODUCTS INC – GrabberGard IFC

***Bearing the UL Classification Mark**

System No. BW-S-0010

Assembly Ratings 1 & 2 Hr (See Item 2)
Nominal Joint Width – 3/4 in.

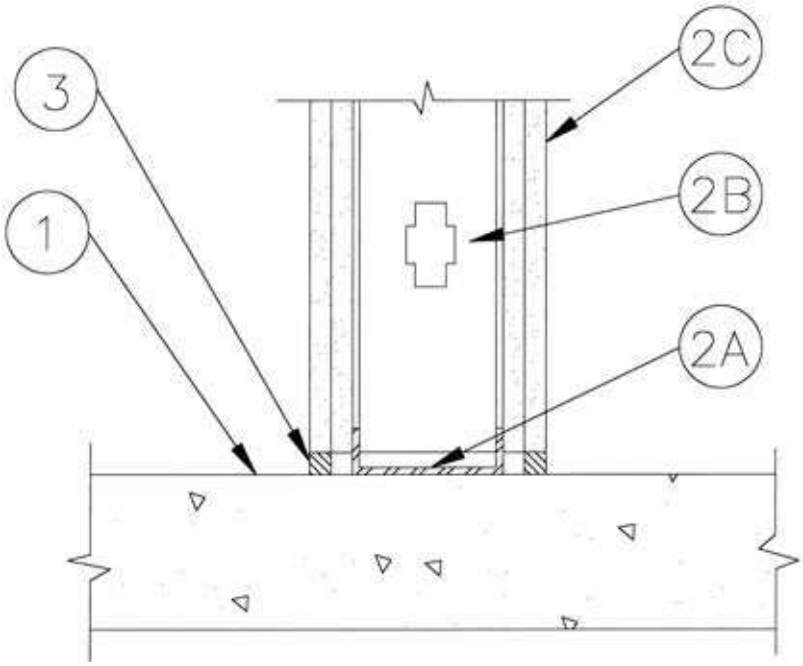

1. **Floor Assembly** – Min 4-1/2 in. thick reinforced lightweight or normal weight (100-150 pcf) structural concrete. Floor may also be constructed of any 6 in. thick UL Classified hollow-core Precast Concrete Units*.
   See Precast Concrete Units category in the Fire Resistance Directory for names of manufactures.

2. **Wall Assembly** – The 1 or 2 hr fire-rated gypsum board/steel stud wall assembly shall be constructed of the materials and in the manner specified in the individual U400 or V400 Series Wall or Partition Design in the UL Fire Resistance Directory. In addition, the wall may incorporate a head-of-wall joint system constructed as specified in the HW Series Joint Systems in the UL Fire Resistance Directory. The wall shall include the following construction features:

   a) Steel Floor Runner – Floor runners of wall assembly shall consist of min No. 25 gauge galv steel channels sized to accommodate steel studs (Item 2B). Floor runners to be provided with min 1-1/4 in. flanges. Runners secured with steel fasteners spaced 12 in. OC.

   b) Studs – Steel studs to be min 2-1/2 in. wide. Studs cut 1/2 to 3/4 in. less in length than assembly height with bottom nesting in, resting on and fastened to floor runner with sheet metal screws. Stud spacing not to exceed 24 in. OC.

   c) Gypsum Board* – Gypsum board installed to a min total thickness of 5/8 or 1-1/4 in. on each side of wall for a 1 or 2 hr rated wall, respectively. Wall to be constructed as specified in the individual U400 or V400 Series Design in the UL Fire Resistance Directory, except that a max 3/4 in. gap shall be maintained between the bottom of gypsum board and top of concrete floor.

   The hourly fire rating of the joint system is equal to the hourly fire rating of the wall.

3. **Fill, Void or Cavity Material* – Sealant** – Max separation between top of floor and bottom of gypsum board is 3/4 in. Min 5/8 in. thickness of fill material installed on each side of the wall between the bottom of the gypsum board and the top of the concrete floor, flush with each surface of the wall.

GRABBER CONSTRUCTION PRODUCTS INC – GrabberGard EFC

***Bearing the UL Classification Mark**

System No. CW-D-1006

F Rating – 2 Hr
T Rating – 1/4 Hr
Integrity Rating – 2 Hr
Insulation Rating – 1/4 Hr
Linear Opening Width – 4 In. Max
Class II Movement Capabilities – 5% Vertical Shear (See Item3)

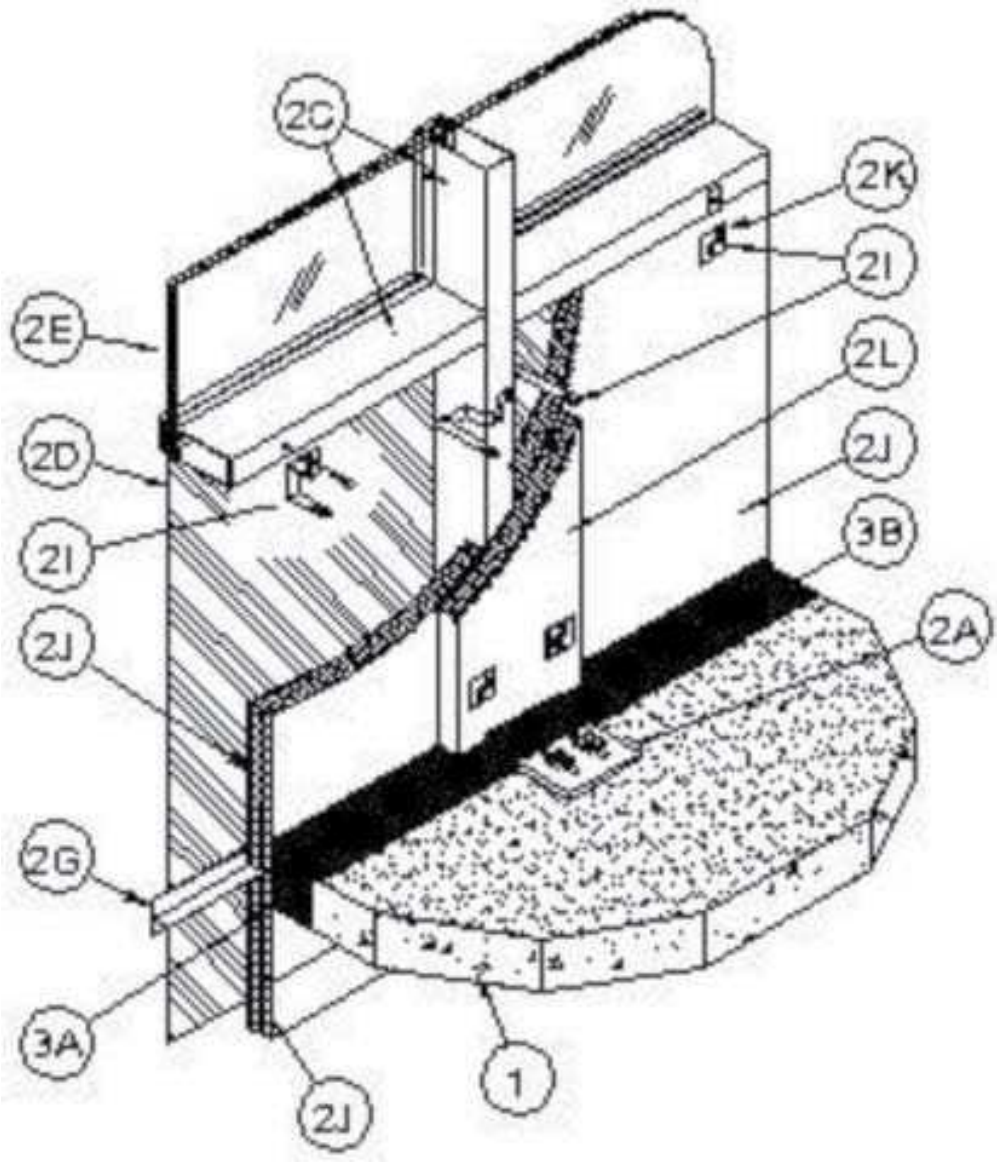

CW-D-1006

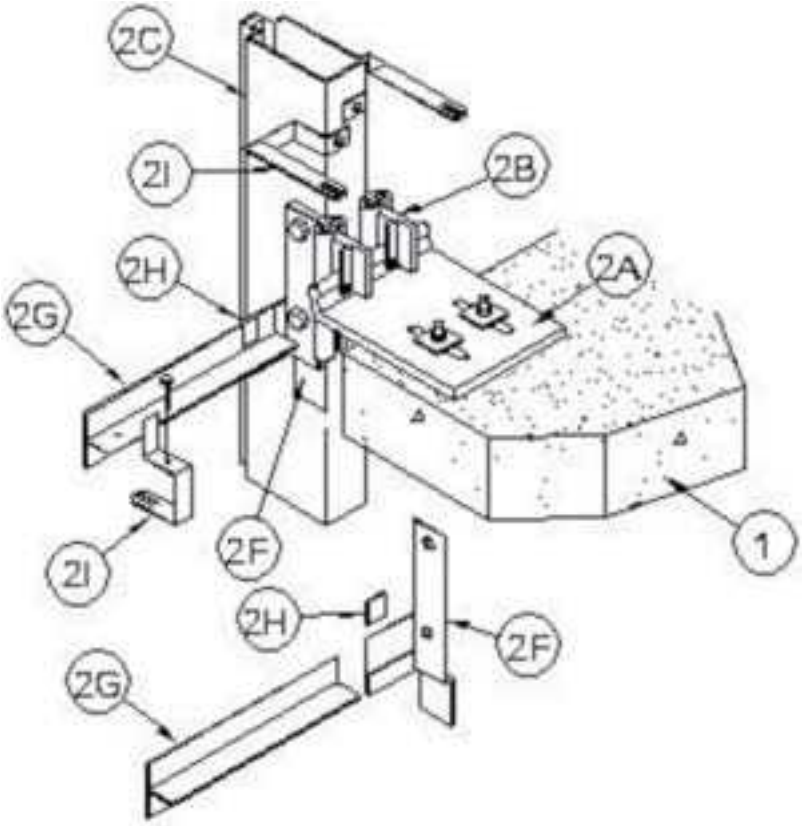

1. **Floor Assembly** – Min 4-1/2 in. thick reinforced lightweight or normal weight (100-150 pcf) structural concrete.

2. **Curtain Wall Assembly** – The curtain wall assembly shall incorporate the following construction features:

   A) Mullion Anchor Plates – Nom 7 in. wide by 9-1/4 in. long by 5/8 in. thick extruded aluminum plates with a nominal 1-3/4 in. high raised lip along one end to engage hooked ends of mullion mounting clips (Item 2B). Plates anchored to top surface of floor at each mullion location with steel wedge anchor bolts in conjunction with extruded aluminum washers.

   B) Mullion Mounting Clips – Nominal 3 in. wide by 7 in. high extruded aluminum anchor slides with tapped holes and with separate extruded aluminum hooks designed to engage the raised lip of the anchor plate (Item 2A). Anchor slides bolted to each side of mullion at each floor with 1/2 in. diam stainless steel screws with locking washers. Anchor hooks secured to anchor slides with steel jacking screws and secured to raised lip of anchor plate with steel set screw.

   C) Framing – The one-piece or split rectangular tubing mullions (vertical members) and transoms (horizontal members) shall be min 2-1/2 in. wide by 6 in. deep and shall be formed from min 0.125 in. thick aluminum. Mullions spaced max 60 in. OC and secured to mullion anchor plates (Item 2A) with mounting clips (Item 2B) at each floor level. Interior face of mullions to be max 4 in. from edge of floor assembly. Transoms to be spaced min 69 in. OC. The minimum height from the top of the floor to the bottom of the vision panel sill is 33 in.

   D) Spandrel Panels – The spandrel panels shall consist of one of the following types:

      a) Glass Panels – Nom 1/4 in. (6 mm) thick opaque heat-strengthened glass. Each panel secured in position with aluminum pressure plates in conjunction with glazing gaskets and steel screws.

      b) Aluminum Panels – Nom 1/8 in. (3 mm) thick aluminum panels with 1/4 in. (6 mm) thick edges. Each panel secured in position with aluminum pressure plates in conjunction with gaskets and steel screws.

      c) Stone Panels – Nom 1-3/16 in. (46 mm) thick polished granite spandrel panels with 1 in. (25 mm) thick gauged edges. Each panel secured in position with aluminum pressure plates in conjunction with gaskets and steel screws.

CW-D-1006

E) Vision Panels – Nom 1 in. thick insulated glass units with two layers of nom 1/4 in. thick transparent heat-strengthened glass separated by a 1/2 in. air space. Each panel installed on silicone rubber setting blocks and secured in position with aluminum pressure plates in conjunction with glazing gaskets and steel screws.

F) Light Gauge Framing* – T-Bar Support Brackets – Nom 2 in. wide brackets formed from galv steel and designed to bridge extruded aluminum anchor slides of mullion mounting clips (Item 2B). Each T-Bar support bracket provided with nominal 3 in. wide by 5 in. high leg with a nominal 3/4 in. hemmed edge to receive the bottom edge of the T-Bar (Item 2G). T-Bar support bracket secured to each side of mullion using the same bolts used to attach the anchor slides of the mullion mounting clips. The hemmed edge of the T Bar support bracket is to be located 4-1/2 in. below the top surface of the floor slab such that, when installed, the stem of the T-Bar (Item 2G) will be located 2 in. below the top plane of the floor slab. Angle of T Bar support bracket to be recessed from interior face of framing as necessary to accommodate the thickness of the curtain wall insulation (Item 2J).

THERMAFIBER INC

G) Light Gauge Framing* – T-Bar – Nom 5 in. wide by 1-1/2 in. high tee section formed from galv steel. T Bar installed between mullions at each floor level to restrain curtain wall insulation (Item 2J) against outward movement when forming material (Item 3A) is installed and to support edge of safing joint cover (Item 3C). The T Bar shall be installed with a clearance of 1/2 to 3/4 in. at each end. The bottom edge of the T Bar shall rest in and be supported by the hemmed edge of the T Bar support bracket (Item 2F) at each end. The top edge of the T Bar shall be locked in place with a T Bar locking clip (Item 2H) at one end and by a min No. 10 by 1/2 in. long self-drilling, self-tapping steel screw at the opposite end. Each T Bar shall be located with its stem at an elevation 2 in. below the top plane of the floor.

THERMAFIBER INC

H) Light Gauge Framing* – T Bar Locking Clip – Nom 1 by 2 in. clip formed from galv steel and designed to lock top of T Bar (Item 2G) to T Bar support bracket (Item 2F).

THERMAFIBER INC

I) Light Gauge Framing* – Vertical and Horizontal Hangers – Vertical and horizontal hangers formed from 1 in. wide galv steel strips, supplied in two configurations with length as needed to accommodate thickness of curtain wall insulation (Item 2J) and mullion cover (Item 2L). Vertical hangers (with 90 deg twist) screw-attached to interior face of mullions with No. 10 by min 1/2 in. long self-drilling, self-tapping steel screws. Vertical hangers on mullions to be located near each corner of each piece of curtain wall insulation except for the nominal 7 to 9 in. high piece of curtain wall insulation located immediately beneath the stem of the T Bar. The 7 to 9 in. high piece of curtain wall insulation immediately beneath the stem of the T Bar requires only one vertical hanger near its midheight at each end. Horizontal hangers (without twist) screw-attached to T-Bar (Item 2G) and to transom at top of spandrel panel (sill of vision panel) with No. 10 by min 1/2 in. long self-drilling, self-tapping steel screws. Horizontal hangers on T Bar to be located within 6 in. of mullion at each end and spaced max 16 in. OC. Horizontal hanger on transom at top of spandrel panel to be located at center of transom. No hangers are to be used on the transom at the bottom of spandrel panel (lintel of vision panel).

THERMAFIBER INC

J) Curtain Wall Insulation* – Min 2 in. thick mineral wool batt insulation faced on one side with aluminum foil/scrim vapor retarder, supplied in min 36 in. wide batts. Insulation batts to be installed with no vertical seams. A horizontal seam is to be located 7 to 9 in. below the stem of the T Bar in each spandrel area and is to be sealed with aluminum foil tape. In the spandrel area beneath the stem of the T Bar, insulation panels tightly-fitted between vertical mullions and between the stem of the T Bar (Item 2G) and the transom, flush with the interior surface of framing. Insulation panels impaled on vertical and horizontal hangers (Item 2I) and secured in place with nom 2 by 2 in. steel locking washers (Item 2K). In the spandrel area above the safing joint cover (Item 3C), insulation panels tightly-fitted between vertical mullions and between the safing material and the transom, flush with the interior surface of framing.

THERMAFIBER INC – Firespan 90

CW-D-1006

K. **Light Gauge Framing* – Locking Washers** – Nom 2 by 2 in. clips formed from galv steel and designed to secure curtain wall insulation and mullion covers on vertical and horizontal hangers (Item 2I).

THERMAFIBER INC

L. **Mullion Covers – Curtain Wall Insulation*** – Nom 2 in. thick mineral wool batt insulation faced on one side with aluminum foil/scrim vapor retarder, supplied in min 24 by 48 in. boards. Nom 12 in. wide strips to be centered over mullions and impaled on the same vertical hangers used to secure the spandrel panel insulation and secured in place with nom 2 by 2 in. locking washers (Item 2K). Mullion covers to abut the safing system (Items 3A and 3C) above and below the floor.

THERMAFIBER INC – Firespan 90

M. **Light Gauge Framing* – Spiral Anchor** – (Not Shown) – As an alternate to the vertical hangers (Item 2I), galv steel wire spiral anchors may be used to secure the framing covers (Item 2L) to the curtain wall insulation (Item 2J) on each side of the mullion. Nom length of spiral anchors to be equal to thickness of curtain wall insulation plus thickness of framing cover. Spiral anchors driven through mullion covers and into curtain wall insulation and spaced max 12 in. OC.

THERMAFIBER INC

3. **Safing System** – Max separation between the edge of the floor and the face of the framing members (at time of installation) is 4 in. The safing system is designed to accommodate vertical shear movement up to a max of 5 percent of its installed width. The safing system shall incorporate the following construction features:

a) **Forming Material*** – Nom 4 pcf density mineral wool batt insulation. Batt sections cut to a min 4-1/2 in. width and stacked to a thickness which is min 25 percent greater than the width of linear gap between the curtain wall insulation and the edge of the concrete floor slab to attain a min 20 percent compression in the thickness direction. The forming material is compressed and inserted cut-edge-first into the linear gap such that its top surface is flush with the top surface of the floor assembly. Forming material to extend completely beneath mullion mounting plate (Item 2A). A max of two tightly-butted seams are permitted in the forming material between mullions.

THERMAFIBER INC – Type SAF

b) **Fill, Void or Cavity Material*** – Min 1/8 in. wet thickness (min 1/16 in. dry thickness) of fill material spray-applied over top of forming material and lapping min 1/2 in. onto the top surface of the floor and onto the curtain wall insulation, mullion anchor plate (Item 2A) and framing covers.

GRABBER CONSTRUCTION PRODUCTS INC – GrabberGard EFS

***Bearing the UL Classification Mark**

System No. CW-S-1011

Integrity Rating — 2 Hr
Insulation Rating — 1/4 Hr
Linear Opening Width — 2-1/2 In. Max
L Rating At Ambient – Less Than 1 CFM/Lin Ft

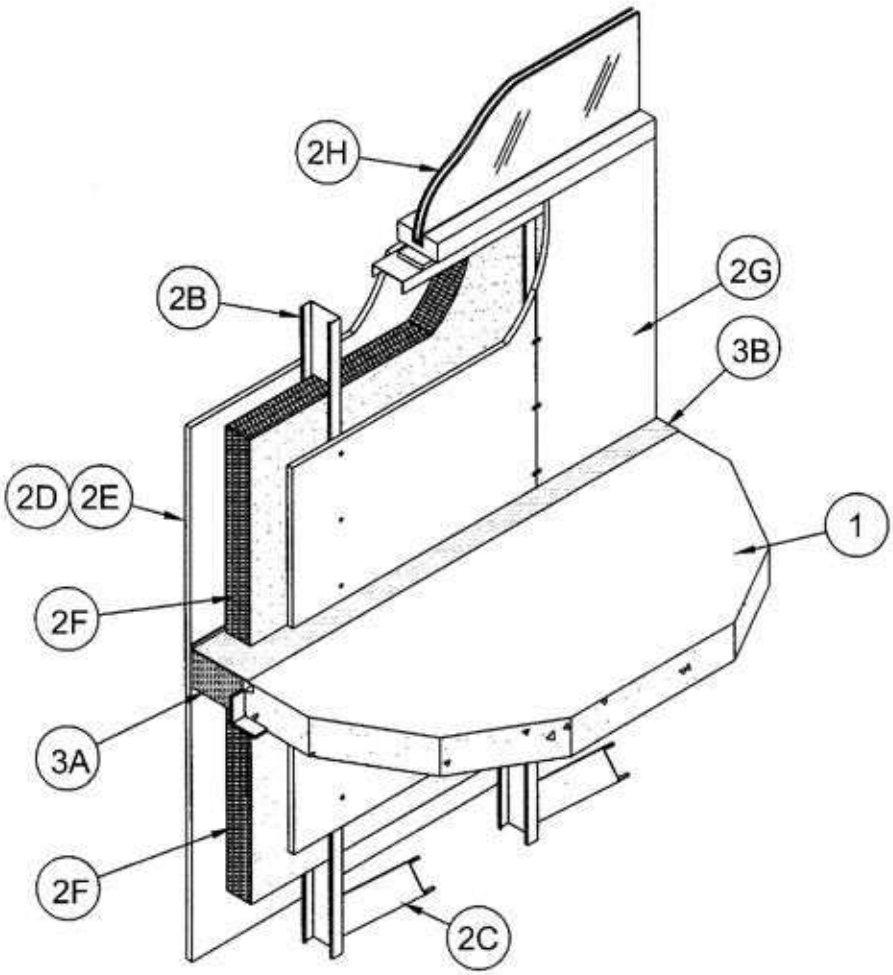

1. **Floor Assembly** – Min 4-1/2 in. thick reinforced lightweight or normal weight (100-150 pcf) structural concrete. Perimeter of floor assembly to be provided with min 3by 3 by 1/4 in. thick cast-in-place structural steel angle for weld-attachment of mullion mounting clips (Item 2A).

2. **Curtain Wall Assembly** – The curtain wall assembly shall incorporate the following construction features:

   A) Mounting Angles (Not Shown) – Min 3 in. long angles with one nom 4 in. leg for attachment to edge of floor assembly and with one leg approx 2-1/2 to 3 in. longer than distance to interior face of steel studs. Angles to be formed of min 1/8 in. thick steel. Angles welded to cast-in-place structural steel angle at edge of floor assembly (Item 1) on one side of each steel stud (Item 2B) at each floor level. Top edge of each mounting angle to be recessed 1 to 1-1/2 in. below top surface of floor.

   B) Steel Studs – C-shaped studs formed from min 0.034 in. thick (20 ga) galv steel. The steel studs shall be 3-1/2 in. to 6 in. wide by 1-1/4 in. deep with 5/16 in. wide stiffening flanges and shall be assembled using runner channels formed from min 0.034 in. thick galv steel. Studs spaced max 24 in. OC and welded, bolted or screwed to mounting angles (Item 2A) at each floor level. When cementitious backer units (Item 2E) are used for exterior sheathing, max stud spacing is 16 in. OC. Interior face of studs to be max 2-1/2 in. from edge of floor assembly.

CW-S-1011

A) Steel Struts – Short lengths of steel stud (Item 2B) used to brace each steel stud against lateral movement. One end of strut bolted, screwed or welded to steel stud beneath plane of floor assembly. Opposite end of strut anchored to underside of floor.

B) Gypsum Board* – One layer of nom 5/8 in. thick, 48 in. wide gypsum sheathing installed to cover entire exterior surface of wall. Sheathing applied with joints centered over studs and secured to steel studs with min 1 in. long bugle head steel screws spaced max 8 in. OC along the edges and max 12 in. OC in the field of each sheet.

See Gypsum Board (CKNX) category for names of Classified Companies and product types.

C) Cementitious Backer Units* – As an alternate to the gypsum sheathing (Item 2D), nom 1/2 in. or 5/8 in. thick square-edge boards attached to studs with 1-1/4 in. long corrosion resistant self-tapping wafer-head steel screws spaced 6 in OC. Joints covered with glass fiber mesh tape.

UNITED STATES GYPSUM CO — Durock Exterior Cement Board, Durock Cement Board or Durock WMB

D) Batts and Blankets* – Any glass fiber insulation bearing the UL Classification Marking as to fire resistance or surface burning characteristics, of a thickness to completely fill stud cavity. Insulation batts friction fit to completely fill all stud cavities of curtain wall above the top of the fill material (Item 3B) and below the forming material (Item 3A).

See **Batts and Blankets** (BZJZ) category for names of manufacturers.

E) Gypsum Board* – One layer of nom 5/8 in. thick, 48 in. wide gypsum board applied with joints centered over studs. Gypsum board secured to steel studs on interior surface of curtain wall with min 1 in. long bugle head steel screws spaced max 8 in. OC along the edges and max 12 in. OC in the field of each sheet. Gypsum board installed to cover interior surface of wall above the top of the fill material (Item 3C) and below the forming material (Item 3B).

See **Gypsum Board** (CKNX) category for names of Classified Companies and product types.

F) Framed Window – Metal-framed window with nom 1/4 in. thick heat-strengthened glass. Sill of window to be min 34 in. above top of floor slab. Top of window to be min 33 in. below bottom of floor slab.

G) Siding, Brick or Stucco – (Not Shown) – Aluminum siding, steel siding, brick veneer or stucco installed over gypsum sheathing or cementitious backer units and meeting the requirements of local code agencies. Brick veneer wall attached to studs with corrugated metal wall ties attached to each stud with steel screws.

1. **Perimeter Fire Containment System – Safing System** – The safing system shall incorporate the following construction features:

A) Forming Material* – Nom 4 pcf density mineral wool batt insulation. Batt sections to be cut to a min width of 4 in. and stacked to a thickness which is 25 percent greater than the width of linear gap between the gypsum sheathing and the edge of the concrete floor to attain a mn 20 percent compression in the thickness direction. The forming material is compressed and inserted cut-edge-first into linear gap between edge of floor slab and sheathing material such that its top surface is flush with the top surface of the floor assembly. Length of batt to be equal to on-center spacing of steel studs such that it is friction-fitted between studs and mounting angles without seams. Additional pieces of mineral wool batt to be stuffed inside the channel of each steel stud throughout the thickness of the forming material.

ROXUL ASIA SDN BHD – SAFE
ROXUL INC – SAFE

B) Fill, Void or Cavity Material* – Min 1/16 in. thickness (dry) of fill material spray-applied over top of forming material and lapping min 1/2 in. onto the top surface of the floor and onto the gypsum sheathing and steel studs.

GRABBER CONSTRUCTION PRODUCTS INC. – GrabberGard EFS

***Bearing the UL Classification Mark**

System No. CW-S-2054

F Rating – 2 Hr
T Rating – 1/4 Hr
Integrity Rating — 2 Hr
Insulation Rating — 1/4 Hr
Linear Opening Width — 8 In. Max

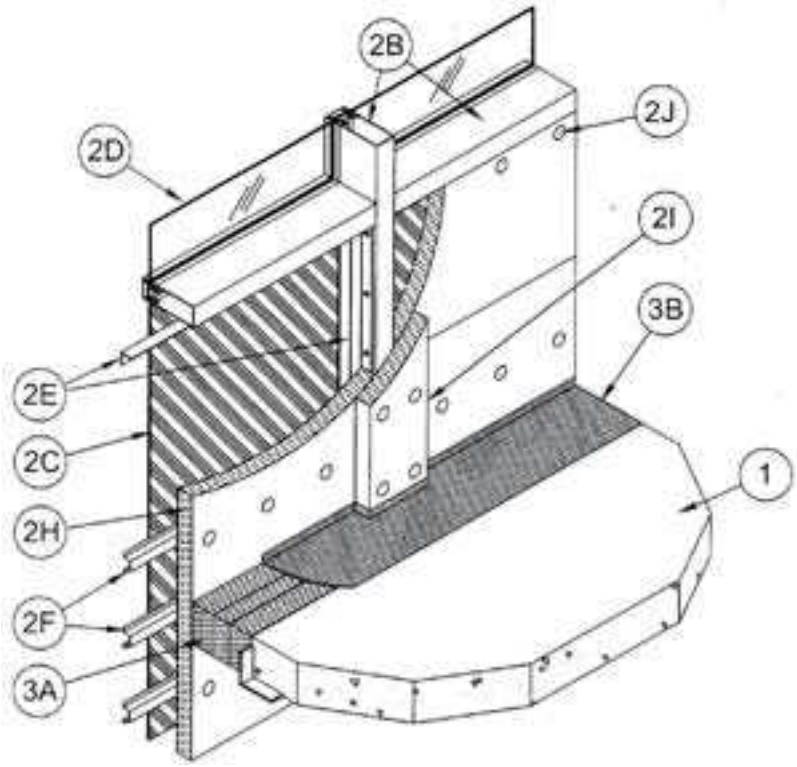

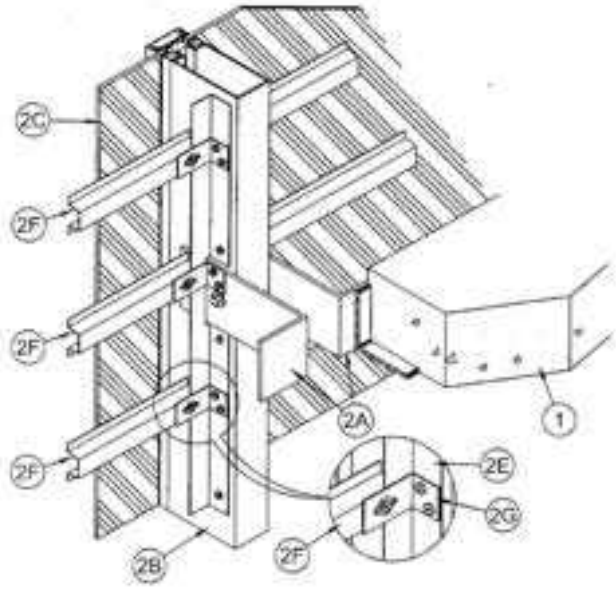

Underwriters Laboratories Inc.®

FL0712

CW-S-2000 Series

CW-S-2054

1. **Floor Assembly** – Min 4-1/2 in. thick reinforced lightweight or normal weight (100-150 pcf) structural concrete. Perimeter of floor assembly to be provided with min 4 by 4 by 1/4 in. thick cast-in-place structural steel angle for weld-attachment of mullion mounting clips (Item 2A).

2. **Curtain Wall Assembly** – The curtain wall assembly shall incorporate the following construction features:

   A. Mullion Mounting Clips – Min 4 in. long angles with one nom 4 in. leg for attachment to edge of floor assembly and with one leg approx 4 in. longer than distance to nearest face of mullion. Clips welded to steel angle at edge of floor assembly (Item 1) on each side of vertical mullion (Item 2B) at each floor level. Top edge of each mounting angle to be recessed min 1/2 in. below top surface of floor.

   B. Framing – The rectangular tubing mullions (vertical members) and transoms (horizontal members) shall be minimum 2-1/2in. wide by 5 in. deep and shall be formed from min 0.100 in. thick aluminum. Mullions spaced max 60 in. OC and secured to mullion mounting clips (Item 2A) at each floor level with two 1/2 in. diam by 4 in. long hex head steel bolts in conjunction with steel nuts and washers. Interior face of mullions to be max 8 in. from edge of floor assembly. Transoms framing top and bottom edges of spandrel panels (Item 2C) to be spaced min 72 in. OC. Transom forming sill of vision panel (Item 2D) to be located such that its bottom surface is at height of 33 in. above the top surface of the floor (Item 1).

   C. Spandrel Panels – Each panel secured in position with aluminum pressure plates in conjunction with gaskets and steel screws. The following types of spandrel panels may be used:

      1. Nom 1/4 in. thick opaque heat-strengthened or tempered glass.
      2. Nom 1-3/16 in. thick polished granite spandrel panels with 1 in. thick gauged edges.
      3. Nom 1/8 in. thick aluminum panels with 1/4 in. thick edges.

   D. Vision Panels – Nom 1/4 in. thick transparent heat-strengthened glass. Each panel secured in position with aluminum pressure plates in conjunction with glazing gaskets and steel screws.

   E. Spandrel Panel Perimeter Angles – Nom 1-1/2 by 1-1/2 in. No. 22 gauge galvanized steel angles installed around entire perimeter of each spandrel panel. Angles recessed from interior face of framing as necessary to accommodate thickness of curtain wall insulation (Item 2H). Angles notched as necessary to be continuous over mullion mounting clips (Item 2A). Angles screw-attached to mullions and transom along sides and top of each spandrel panel with No. 10 by 1/2 in. long self-drilling, self-tapping steel screws spaced max 12 in. OC. Angle along bottom of each spandrel panel to be screw-attached to leg of angle on mullion at each end without any direct attachment to transom.

   F. Stiff Back Channel – Nom 2-1/2 in. wide by 7/8 in. deep hat-shaped channel formed of 22 gauge galv steel to be installed to stiffen curtain wall insulation between mullions above and below and at elevation of safing joint. One stiff back channel to be located with its centerline approx 6 in. below floor and one stiff back channel to be located with its centerline approx 6 in. above floor. A third stiff back channel is to be located near the midheight of the safing joint. A clearance of 1/4 to 1/2 in. shall be maintained between the ends of the stiff back channels and the mullions. Stiff back channel secured to mullion at each end with channel attachment clip (Item 2G) in conjunction with a No. 8 by 1/2 in. long self-drilling, self-tapping wafer head steel screw or a 3/16 in. diam steel bolt with nut and washer.

   G. Channel Attachment Clip – Nom 1-1/2 by 2-1/2 by 1-1/2 in. long angle formed of 16 gauge galv steel. The 2-1/2 in. leg is provided with a 1/4 in. wide by 1-1/2 in. long slot along its centerline for attachment of the stiff back channel. Clips secured to mullions mounting clips (Item 2A) and mullions, through perimeter angles, with two No. 10 by 1/2 in. long self-drilling, self-tapping steel screws. Channel clips installed with 2-1/2 in. leg recessed from interior face of mullion to accommodate thickness of curtain wall insulation (Item 2H).

CW-S-2054

A. **Curtain Wall Insulation*** – Min 2 in. thick mineral wool board insulation, unfaced or faced on one side with aluminum foil/scrim vapor retarder, supplied in min 36 in. wide boards. Insulation boards to be installed with no vertical seams and with horizontal seams spaced min 24 in. OC. A full-width board shall be centered at the midheight of floor and tightly-fitted between vertical mullions, flush with interior surface of framing. The centered board shall be secured to the stiff back channels (Item 2F) located approx 6 in. above and below the floor with cup head weld pins (Item 2J) spaced max 10 in. OC along each channel. The remainder of the spandrel panel framing above and below the centered full-width board shall be filled in with additional lengths of board cut to fit tightly between mullions and with the horizontal seams between board sections tightly butted. The boards shall be secured to the spandrel panel perimeter angles with cup head weld pins at each corner of each board and spaced max 10 in. OC. When faced boards are used, butted seams to be covered with min 4 in. wide aluminum foil tape.

ROXUL ASA SDN BHD – CuratinRock 80
ROXUL INC – CurtainRock 80

B. **Framing Covers – Curtain Wall Insulation*** – Min 8 in. wide strips cut from the same min 2 in. thick mineral wool batt insulation used for the curtain wall insulation (Item 2H). Framing covers to be centered over mullions and secured to the spandrel panel perimeter angles (Item 2E) with cup head weld pins (Item 2J) spaced max 12 in. OC. Where more than one spandrel panel occurs between vertically separated vision panels, the horizontal transom between spandrel panels shall also be covered with an 8 in. wide framing cover in the same manner as on the vertical mullions. Framing covers on mullions to abut the mineral wool batt safing material (Item 3A) above and below floor.

ROXUL ASA SDN BHD – CuratinRock 80
ROXUL INC – CurtainRock 80

C. **Weld Pin** - No. 12 gauge galv steel weld pin with nom 1-3/16 in. diam galv steel cup head. Cup head weld pins provided in two lengths. One length to be equal to thickness of curtain wall insulation (Item 2H) and second length to be equal to thickness of curtain wall insulation plus thickness of framing cover (Item 2I). Cup head weld pins inserted through curtain wall insulation and mullion covers and welded to spandrel panel perimeter angles at max OC spacings referenced in Items 2H and 2I.

1. **Perimeter Fire Containment System** – The perimeter fire containment system shall incorporate the following construction features:

A. **Forming Material*** – Nom 4 in. thick, mineral wool batt safing material to be installed in continuous pieces between mullion clips. Safing material to be cut to a 4-1/2 in. width and stacked to a thickness which is at least 25 percent greater than the width of the linear gap between the curtain wall and the edge of the concrete floor slab. The safing material is compressed and inserted cut-edge-first into the linear gap and recessed from top surface of floor to accommodate the required thickness of fill material. Additional pieces of safing material to be friction-fit into space between mullion mounting clips at each mullion location with top edges of mullion clips covered with a min 1/2 in. thickness of compressed safing material.

ROXUL ASIA SDN BDH – SAFE
ROXUL INC – SAFE

B. **Fill, Void or Cavity Material* – Sealant** – Min 1/16 in. thickness (dry) of fill material applied within the joint, flush with top surface of floor.

GRABBER CONSTRUCTION PRODUCTS INC – GrabberGard EFS

***Bearing the UL Classification Mark**

System No. FF-D-0047

Assembly Rating – 2 hr
Nominal Joint Width – 1 in.
Class II Movement Capabilities – 25% Compression or Extension

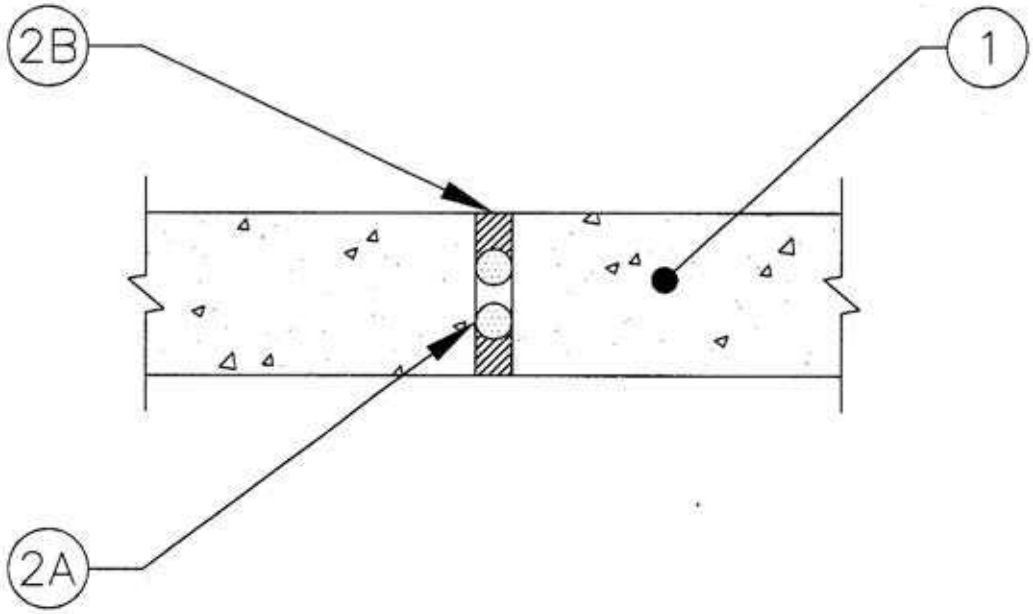

1. Floor Assembly – Min 4-1/2 in. thick steel-reinforced lightweight or normal weight (100-150 pcf) structural concrete.
2. Joint Systems – Max width of joint (at time of installation of joint system) is 1 in. The joint system is designed to accommodate a max 25 percent compression or extension from its installed width. The joint system shall consist of the following:
   A. **Packing Material – Backer Rod** – Nom 1-1/4 in. diam polyethylene backer rod compressed and firmly packed into joint opening and recessed from both sides of floor to accommodate required thickness of fill material.
   B. **Fill, Void or Cavity Material – Sealant** – Min 1 in. thickness of fill material applied within the joint, flush with both surfaces of floor.

GRABBER CONSTRUCTION PRODUCTS INC – GrabberGard IFC

***Bearing the UL Classification Marking**

System No. FF-D-0048

Assembly Rating – 2 hr
Nominal Joint Width – 1 in.
Class II Movement Capabilities – 25% Compression or Extension

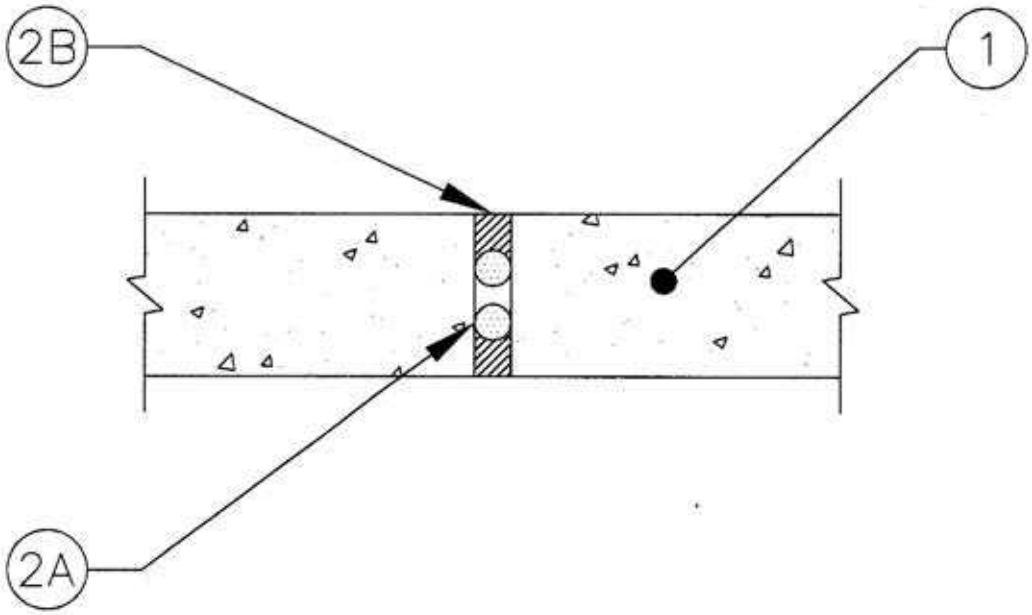

1. **Floor Assembly** – Min 4-1/2 in. thick steel-reinforced lightweight or normal weight (100-150 pcf) structural concrete.

2. **Joint Systems** – Max width of joint (at time of installation of joint system) is 1 in. The joint system is designed to accommodate a max 25 percent compression or extension from its installed width. The joint system shall consist of the following:

   A. Packing Material – Backer Rod – Nom 1-1/4 in. diam polyethylene backer rod compressed and firmly packed into joint opening and recessed from both sides of floor to accommodate required thickness of fill material.

   B. Fill, Void or Cavity Material* – Sealant – Min 1 in. thickness of fill material applied within the joint, flush with both surfaces of floor.

   GRABBER CONSTRUCTION PRODUCTS INC – GrabberGard EFC

***Bearing the UL Classification Marking**

System No. FF-D-1059

Assembly Rating – 2 Hr
Joint Width – 4 in. Max
Class II Movement Capabilities – 12.5% Compression or Extension

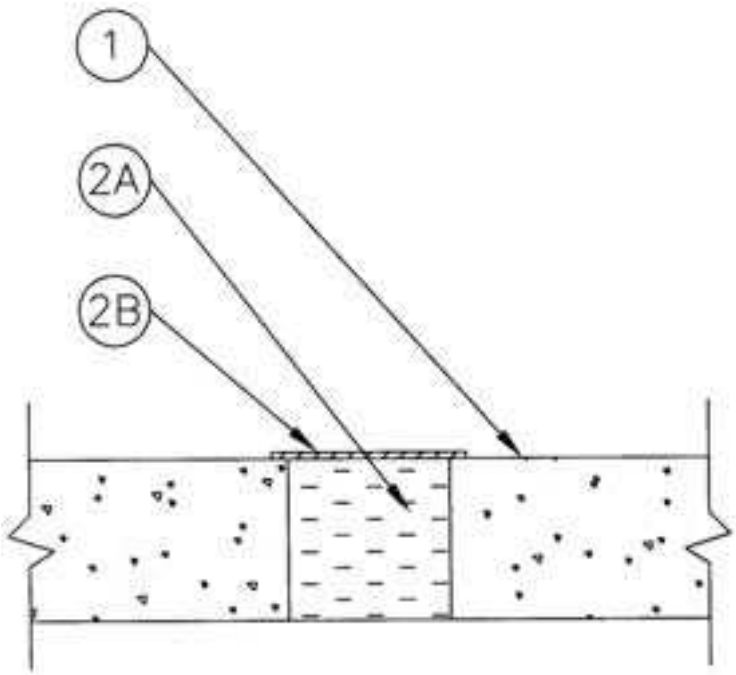

1. **Floor Assembly** – Min 4-1/2 in. thick steel-reinforced lightweight or normal weight (100-150 pcf) structural concrete.

2. **Joint System** – Max width of joint (at time of installation of joint system) is 4 in. The joint system is designed to accommodate a max 12.5 percent compression or extension from its installed width. The joint system shall consist of the following:

   A. **Forming Material*** – Min 4 pcf mineral wool batt insulation installed into joint opening as a permanent form. Batt cut to min width of 4-1/2 in. and installed edge-first into joint opening, parallel with joint direction, such that batt sections are compressed min 33 percent in thickness and such that the compressed batt sections are flush with the top surface of floor.

   Owens Corning HT Inc, Div of Owens Corning – Paroc Safing Insulation
   Roxul Asia SDN BHD – Type SAF
   Roxul Inc. – Type SAF
   Thermafiber LLC – Type SAF
   Rock wool Manufacturing Company – Delta Safing Board

   B. **Fill, Void or Cavity Material* – Sealant** – Min 1/16 in. dry thickness of fill material sprayed or brushed on top surface of floor to completely cover mineral wool and overlap a min of 1/2 in. onto concrete floor.

   GRABBER CONSTRUCTION PRODUCTS INC – GrabberGard EFS

***Bearing the UL Classification Marking**

System No. FW-D-0038

Assembly Rating – 2 hr
Nominal Joint Width – 1 in.
Class II Movement Capabilities – 25% Compression or Extension

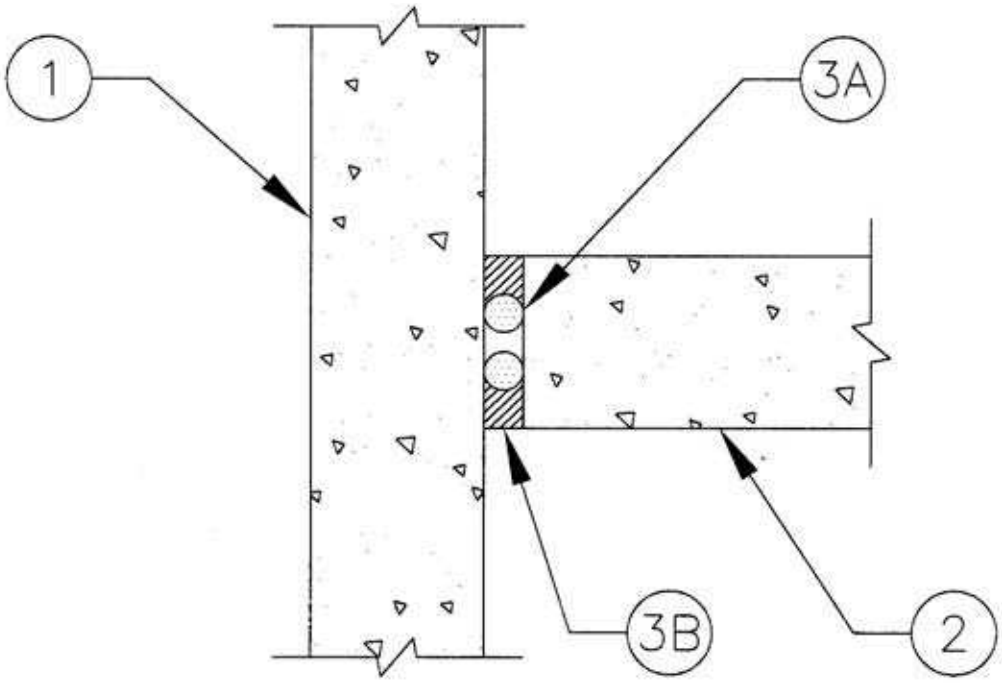

1. **Wall Assembly** – Min 4-1/2 in. thick reinforced lightweight or normal weight (100-150 pcf) structural concrete. Wall may also be constructed of any UL Classified **Concrete Blocks***.
   See Classified **Concrete Blocks** (CATZ) category in the Fire resistance Directory for names of manufactures.
2. **Floor Assembly** – Min 4-1/2 in. thick steel-reinforced lightweight or normal weight (100-150 pcf) structural concrete.
3. **Joint Systems** – Max width of joint (at time of installation of joint system) is 1 in. The joint system is designed to accommodate a max 25 percent compression or extension from its installed width. The joint system shall consist of the following:
   - **A. Packing Material – Backer Rod** – Nom 1-1/4 in. diam polyethylene backer rod compressed and firmly packed into joint opening and recessed from both sides of wall to accommodate required thickness of fill material.
   - **B. Fill, Void or Cavity Material – Sealant** – Min 1 in. thickness of fill material applied within the joint, flush with both surfaces of wall.

GRABBER CONSTRUCTION PRODUCTS INC – GrabberGard IFC

***Bearing the UL Classification Marking**

System No. FW-D-0039

Assembly Rating – 2 hr
Nominal Joint Width – 1 in.
Class II Movement Capabilities – 25% Compression or Extension

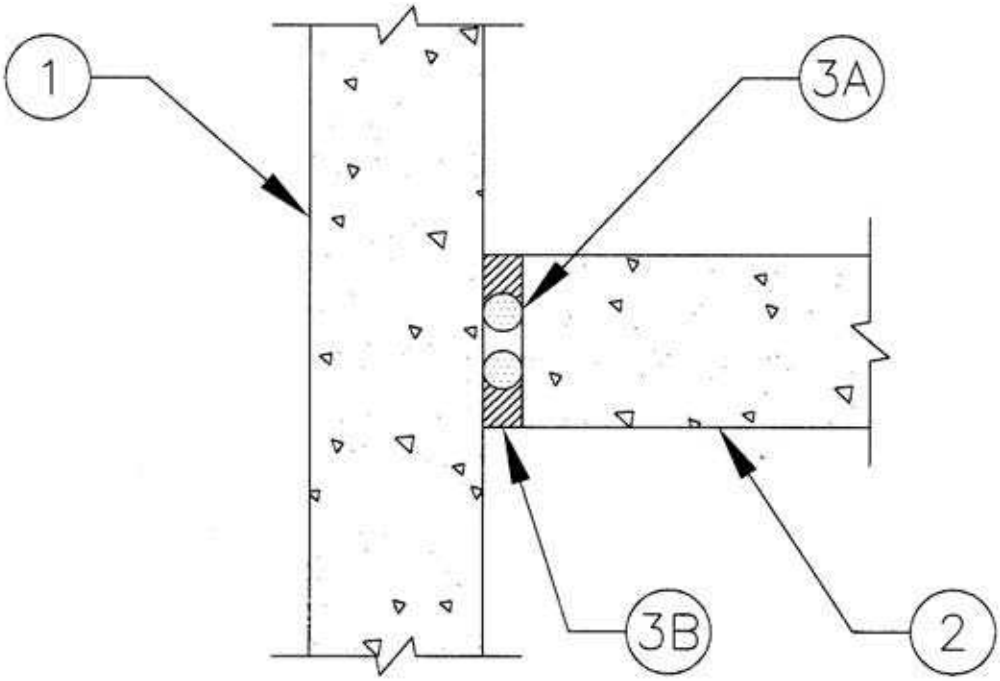

1. **Wall Assembly** – Min 4-1/2 in. thick reinforced lightweight or normal weight (100-150 pcf) structural concrete. Wall may also be constructed of any UL Classified **Concrete Blocks***.
   See Classified **Concrete Blocks** (CATZ) category in the Fire resistance Directory for names of manufactures.
2. **Floor Assembly** – Min 4-1/2 in. thick steel-reinforced lightweight or normal weight (100-150 pcf) structural concrete.
3. **Joint Systems** – Max width of joint (at time of installation of joint system) is 1 in. The joint system is designed to accommodate a max 25 percent compression or extension from its installed width. The joint system shall consist of the following:
   - **A. Packing Material – Backer Rod** – Nom 1-1/4 in. diam polyethylene backer rod compressed and firmly packed into joint opening and recessed from both sides of wall to accommodate required thickness of fill material.
   - **B. Fill, Void or Cavity Material* – Sealant** – Min 1 in. thickness of fill material applied within the joint, flush with both surfaces of wall.

GRABBER CONSTRUCTION PRODUCTS INC – GrabberGard EFC

***Bearing the UL Classification Marking**

System No. FW-D-1055

Assembly Rating – 2 Hr
Joint Width – 4 in. Max
Class II Movement Capabilities – 12.5% Compression or Extension

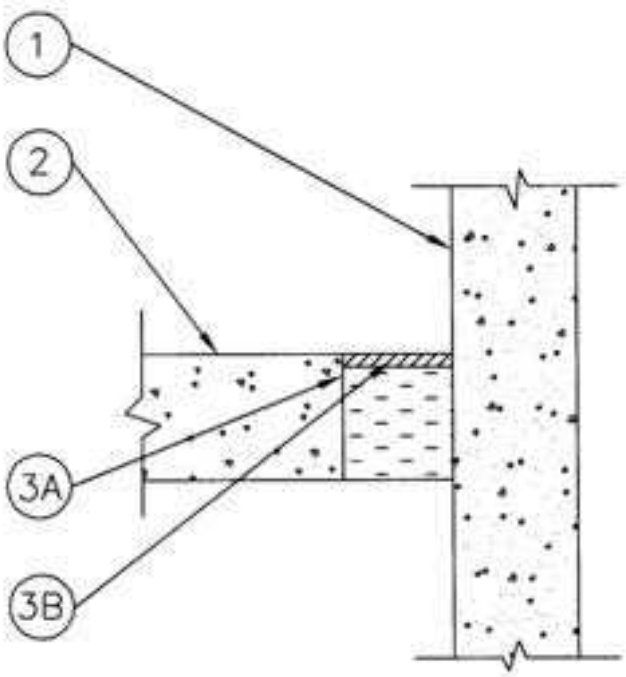

1. **Wall Assembly** – Min 4-1/2 in. thick reinforced lightweight or normal weight (100-150 pcf) structural concrete. Wall may also be constructed of any UL Classified Concrete Blocks*.
   See **Concrete Blocks** (CAZT) category in the Fire Resistance Directory for names of manufacturers.
2. **Floor Assembly** – Min 4-1/2 in. thick steel-reinforced lightweight or normal weight (100-150 pcf) structural concrete.
3. **Joint System** – Max width of joint (at time of installation of joint system) is 4 in. The joint system is designed to accommodate a max 12.5 percent compression or extension from its installed width. The joint system shall consist of the following:
   A. **Forming Material*** – Min 4 pcf mineral wool batt insulation installed in joint opening as a permanent form. Batt cut to min width of 4-1/2 in. and installed edge first into joint opening, parallel with joint direction, such that batt sections are compressed min 33 percent in thickness and such that the compressed batt sections are flush with the top surface of floor. Adjoining lengths of batt to be tightly butted with seams spaced min 36 in. apart along the length of the joint.

   Owens Corning HT Inc, Div of Owens Corning – Paroc Safing Insulation
   Thermafiber – Type SAF
   Rock Wool Manufacturing Company – Delta Safing Board

   B. **Fill, Void or Cavity Material* – Sealant** – Min 1/16 in. dry thickness of fill material sprayed or brushed on top surface of floor to completely cover mineral wool and overlap a min of 1/2 in. onto concrete floor.

   GRABBER CONSTRUCTION PRODUCTS INC – GrabberGard EFS

***Bearing the UL Classification Marking**

System No. HW-D-0353

Assembly Ratings 1 & 2 Hr (See Item 2)
Nominal Joint Width –3/4 in.
Class II Movement Capabilities – 33% Compression or Extension

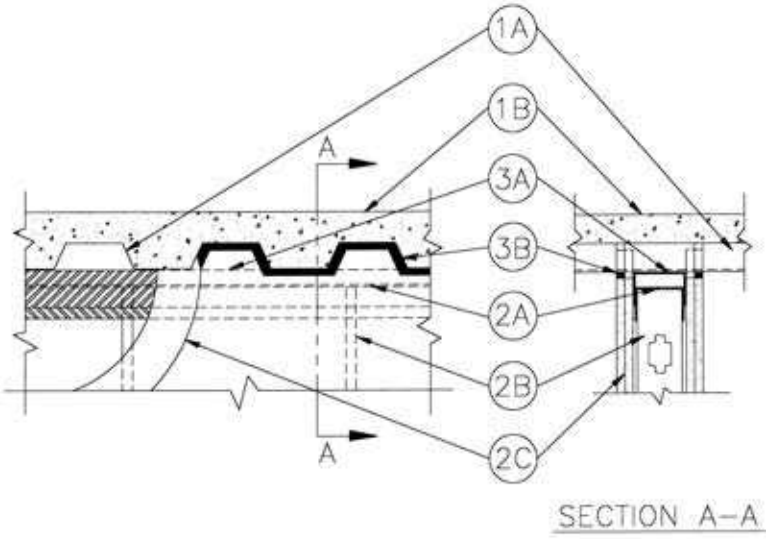

1. **Floor Assembly** – The fluted steel deck/concrete floor assembly shall be constructed of the materials and in the manner described in the individual Floor-Ceiling Design in the UL Fire Resistance Directory and shall include the following construction features:

   A. Steel Floor and Form Units* – Max 3 in. deep galv fluted units.
   B. Concrete – Min 2-1/2 in. thick reinforced concrete, as measured from the top plane of the floor units.

1A. **Roof Assembly** – (Not Shown) – As an alternative to the floor assembly, a fire-rated fluted steel deck roof assembly may be used. The roof assembly shall be constructed of the materials and in the manner described in the individual P900 Series Roof-Ceiling Design in the UL Fire Resistance Directory. The hourly rating of roof assembly shall be equal or greater than the hourly rating of the wall assembly and shall include the following construction features:

   A. Steel Roof Deck – Max 3 in. deep galv steel fluted roof deck.
   B. | Roof Insulation – Min 2-1/4 in. thick poured insulation concrete, as measured from the top plane of the floor units.
   C. Roof Covering* – Hot-mopped or cold-application materials compatible with insulating concrete.

2. **Wall Assembly** – The 1 or 2 hr fire rated gypsum board/steel stud wall assembly shall be constructed of the materials and in the manner described in the individual U400 - Series Wall or Partition Design in the UL Fire Resistance Directory and shall include the following construction features:

   A. Steel Floor And Ceiling Runners – Floor and ceiling runners of wall assembly shall consist of galv steel channels sized to accommodate steel studs (Item 2B). When U-shaped deflection channel (Item 3A) is used, ceiling runner installed within the deflection channel with 1 in. gap maintained between the top of ceiling runner and top of deflection channel. When deflection channel is not used, ceiling runner is secured to valleys of steel floor units (Item 1A) with steel fasteners or by welds spaced max 24 in. OC.

   A1. Light Gauge Framing* – Slotted Ceiling Runner – As an alternate to the ceiling runner in Item 2A, slotted ceiling runner to consist of galv steel channel with slotted flanges sized to accommodate steel studs (Item 2B). Slotted ceiling runner installed perpendicular to direction of fluted steel floor units and secured to valleys of steel fasteners spaced max 24 in. OC. When slotted ceiling runner is used, deflection channel (Item 3A) shall not be used.

METAL-LITE INC – The System
BRADY CONSTRUCTION INNOVATIONS, INC,
DBA SLIPTRACK SYSTEMS INC. – SLP-TRK

HW-D-0353

A2. Light Gauge Framing* – Clipped Ceiling Runner – As an alternate to the ceiling runner in Item 2A, 2A1, clipped ceiling runner to consist of galv steel channel with clips preformed in track flanges which positively engage the inside flange of the steel studs (Item 2B). Track sized to accommodate steel studs (Item 2B). Track flanges to be min 2-1/2 in. Clipped ceiling runner installed perpendicular to direction of fluted steel floor units and secured to valleys with steel fasteners spaced 24 in. OC. When clipped ceiling runner is used, deflection channel (Item 3A) shall not be used.

TOTAL STEEL SOLUTIONS LLC – Snap Trak

A3. Light Gauge Framing* – Vertical Deflection Ceiling Runner – As an alternate to the ceiling runner in Item 2A, 2A1 or 2A2, vertical deflection ceiling runner to consist of galv steel channel with slotted vertical deflection clips mechanically fastened within runner. Slotted clips, provided with step bushings, for permanent fastening of steel studs. Vertical deflection ceiling runner installed perpendicular to direction of fluted steel floor or roof deck and secured to valleys with steel fasteners spaced max 24 in. OC. When slotted ceiling runner is used, deflection channel (Item 3A) shall not be used.

THE STEEL NETWORK INC – VertiTrack VTD358, VTD400, VTD600 and VTD800

A. Studs – Steel studs to be min 3-5/8 in. wide. Studs cut 1/2 to 3/4 in. less in length than assembly height. Studs attached to ceiling runner with sheet metal screws a min of 1/2 in. below bottom of deflection channel, when deflection channel is used. When deflection channel is not used, steel studs shall not be secured to ceiling runner. When slotted ceiling runner (Item 2A1) is used, steel studs secured to slotted ceiling runner with No. 8 by 1/2 in. long wafer head steel screws at mid-height of slot on each side of wall. When vertical deflection ceiling runner (Item 2A3) is used, steel studs secured to slotted vertical deflection clips, through bushings, with steel screws at mid-height of each slot. Stud spacing not to exceed 24 in. OC.

B. Gypsum Board* – Gypsum board sheets to be installed to a min total thickness of 5/8 in or 1-1/4 in. on each side of the wall for a 1 or 2 hr fire rated wall, respectively. Wall to be constructed as specified in the individual Wall and Partition Design in the UL Fire Resistance Directory, except that the gypsum board is cut to fit the contour of the steel floor units with a nom 3/4 in. gap. The screws attaching the gypsum board to studs at the top of the wall shall be located 1 in. below the bottom of the deflection channel, when deflection channel is used. When deflection channel is not used, the screws attaching the gypsum board to studs at the top of the wall shall be located 1 in. below the bottom of the ceiling runner.
The hourly fire rating of the joint system is dependent on the hourly fire rating of the wall.

1. **Joint System** – Max separation between bottom of floor and top of wall is 3/4 in. The joint system is designed to accommodate a max 33 percent compression or extension from its installed width. The joint system consists of a deflection channel and a fill material, as follows:

A. Deflection Channel – (Optional) – A nom 3-5/8 in. wide by min 2 in. deep min 24 ga. steel U-shaped channel. Deflection channel secured to valleys of steel floor units (Item 1A) with steel fasteners or by welds spaced max 24 in. OC. The ceiling runner (Item 2A) is installed within the deflection channel to maintain a 1 in. gap between the top of the ceiling runner and the top of the deflection channel. The ceiling runner is not fastened to the deflection channel.

B. Fill Void or Cavity Material* – Sealant – Min 5/8 in. thickness of fill material installed on each side of the wall between the top of the gypsum board and all surfaces of the steel floor units, flush with each surface of gypsum board.

GRABBER CONSTRUCTION PRODUCTS INC – GrabberGard IFC

***Bearing the UL Classification Marking**

System No. HW-D-0354

Assembly Rating – 2 Hr (See Item 2)
Nominal Joint Width – 3/4 in.
Class II Movement Capabilities – 33% Compression or Extension

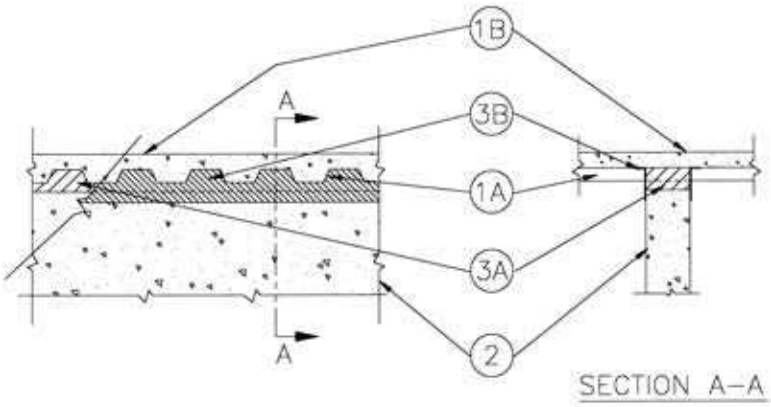

1. **Floor Assembly** – The fluted steel deck/concrete floor assembly shall be constructed of the materials and in the manner described in the individual Floor-Ceiling Design in the UL Fire Resistance Directory and shall include the following construction features:

   A. Steel Floor and Form Units* – Max 3 in. deep galv fluted units.
   B. Concrete – Min 2-1/2 in. thick reinforced concrete, as measured from the top plane of the floor units.

1A. **Roof Assembly** – (Not Shown) – As an alternative to the floor assembly, a fire-rated fluted steel deck roof assembly may be used. The roof assembly shall be constructed of the materials and in the manner described in the individual P900 Series Roof-Ceiling Design in the UL Fire Resistance Directory. The hourly rating of roof assembly shall be equal or greater than the hourly rating of the wall assembly and shall include the following construction features:

   A. Steel Roof Deck – Max 3 in. deep galv steel fluted roof deck.
   B. Roof Insulation – Min 2-1/4 in. thick poured insulation concrete, as measured from the top plane of the floor units.
   C. Roof Covering* – Hot-mopped or cold-application materials compatible with insulating concrete.

2. **Wall Assembly** – Min 4-7/8 in. thick reinforced lightweight or normal weight (100-150pcf) structural concrete. Wall may also be constructed of any UL Classified Concrete Blocks*
   See **Concrete Blocks** (CAZT) category in the Fire Resistance Directory for names of manufacturers.

3. **Joint System** – Max separation between bottom of floor and top of wall is 3/4 in. The joint system is designed to accommodate a max 33 percent compression or extension from its installed width. The joint system consists of a forming material and a fill material, as follows:

   A. Forming Material* – Min 4-7/8 in. thickness of min 4 pcf density mineral wool batt insulation cut to the shape of the fluted deck, approximately 25 percent larger than the area of the flutes with additional min 4-7/8 in. thick by 1 in. high sections at the bottom of the shapes to completely fill the 3/4 in. gap between the top of the wall and bottom of the steel floor units. Mineral wool to be compressed and firmly packed into the flutes and the gap between the top of the wall and bottom of the steel floor units, flush with both sides of wall.

   IIG Minwool LLC – Paroc Safing Insulation
   Thermafiber LLC – Type SAF

   B. Fill, Void or Cavity Material* – Min 1/16 in. thickness of fill material sprayed or brushed on each side of the wall in the flutes of the steel floor units and between the top of the wall and the bottom of the steel floor units to completely cover mineral wool and overlap a min of 1 in. onto wall and steel deck on both sides of wall.

   GRABBER CONSTRUCTION PRODUCTS INC – GrabberGard EFS

***Bearing the UL Classification Marking**
FL0712

Underwriters Laboratories Inc.®

System No. HW-D-0355

Assembly Ratings – 2 Hr
Nominal Joint Width – 3/4 in.
Class II Movement Capabilities – 33% Compression or Extension

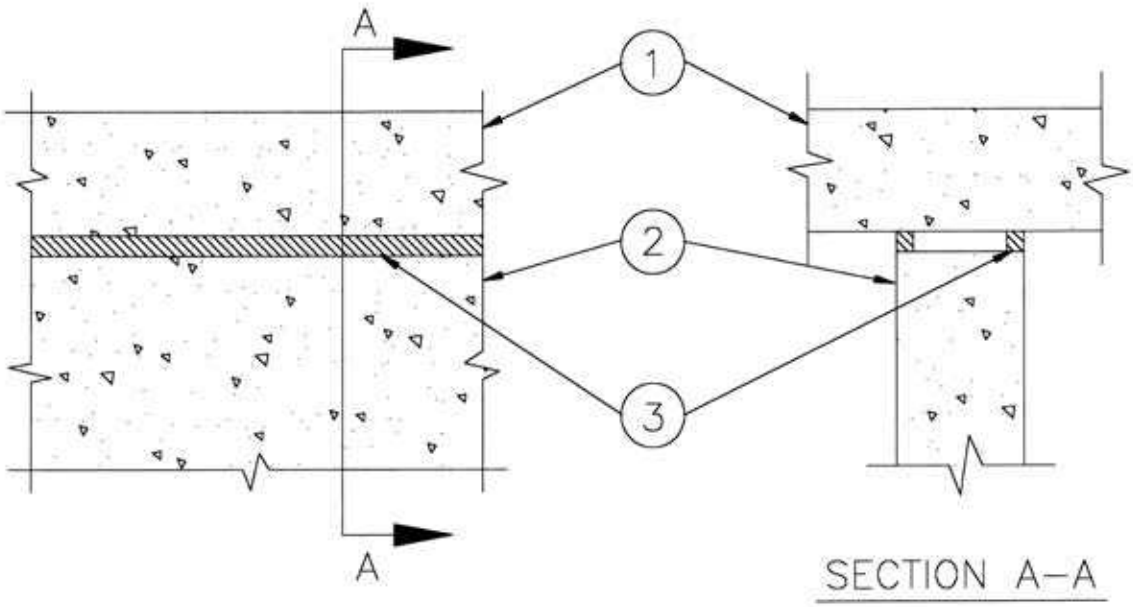

1. **Floor Assembly** – Min 4-1/2 in. thick reinforced lightweight or normal weight (100-150 pcf) concrete.
2. **Wall Assembly** – Min 4-7/8 in. thick reinforced lightweight or normal weight (100-150 pcf) structural concrete. Wall may also be constructed of any UL Classified **Concrete Blocks***.
   See **Concrete Blocks** (CAZT) category in the Fire Resistance Directory for names of manufacturers.
3. **Joint System** – Max separation between bottom of floor and top of wall is 3/4 in. The joint system is designed to accommodate a max 33 percent compression or extension from its installed width. Min 5/8 in. thickness of fill material installed on each side of the wall between the top of the wall and the bottom of the floor, flush with each surface of wall.

GRABBER CONSTRUCTION PRODUCTS INC – GrabberGard IFC

***Bearing the UL Classification Marking**

System No. HW-D-0356

Assembly Ratings 1 & 2 Hr (See Item 2)
Nominal Joint Width – 3/4 in.
Class II Movement Capabilities – 33% Compression or Extension

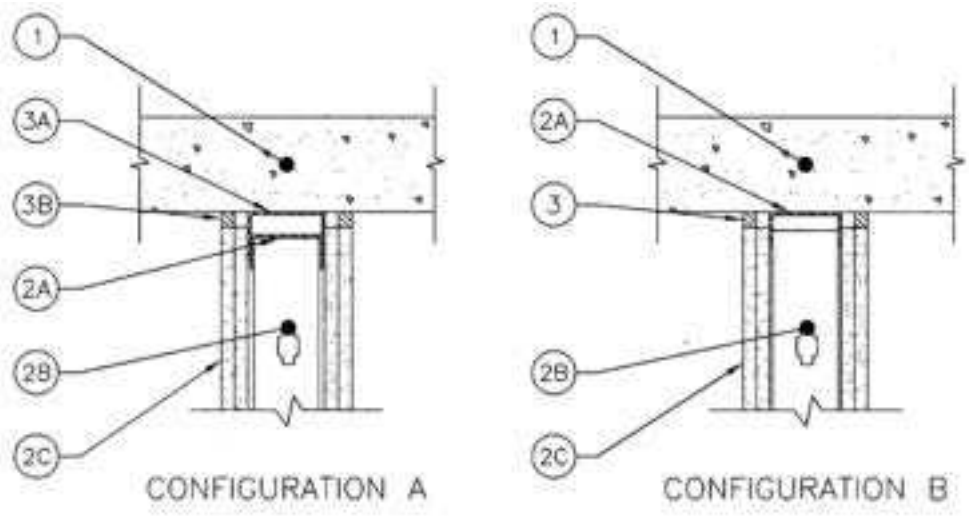

1. **Floor Assembly** – Min 4-1/2 in. thick reinforced lightweight or normal weight (100-150 pcf) concrete.

CONFIGURATION A

2. **Wall Assembly** – The 1 or 2 hr fire rated gypsum wallboard/steel stud wall assembly shall be constructed of the materials and in the manner described in the individual U400 or V400 - Series Wall or Partition Design in the UL Fire Resistance Directory and shall include the following construction features:
   - **A. Steel Floor and Ceiling Runners** – Floor and Ceiling runners of wall assembly shall consist of galv steel channels sized to accommodate steel studs (Item 2B). Ceiling runner to be installed within the deflection channel such that a 1 in. gap is maintained between the top of ceiling runner and top of deflection channel. Deflection channel is secured to floor with steel masonry anchors spaced a max of 24 in. OC.
   - **B. Studs** – Steel studs to be min 3-5/8 in. wide. Studs cut 1/2 to 3/4 in. less in length than assembly height. Studs attached to ceiling runner with sheet metal screws a min of 1/2 in. below bottom of deflection channel. Stud spacing not to exceed 24 in. OC.
   - **C. Gypsum Board*** – Gypsum board sheets to be installed to a min total thickness of 5/8 or 1-1/4 in. on each side of the wall for a 1 or 2 hr fire rated assemblies, respectively. Wall to be constructed as specified in the individual Wall and Partition Design in the UL Fire Resistance Directory, except that a nom 3/4 in. gap shall be maintained between the top of the gypsum board and the lower surface of the floor. The screws attaching the wallboard to studs at the top of the wall shall be located 1in. below the bottom of the U-shaped deflection channel (Item 3A).
     The hourly fire rating of the joint system is dependent on the hourly fire rating of the wall.
3. **Joint System** – Max separation between bottom of floor and top of wall is 3/4 in. The joint system is designed to accommodate a max 33 percent compression or extension from its installed width. The joint system consists of a deflection channel and a fill material, as follows:
   - **A. Deflection Channel** – A nom 3-5/8 in. wide by min 2 in. deep min 24 gauge (or heavier) steel U-shaped channel. Deflection channel secured to floor assembly with steel fasteners spaced max 24 in. OC. The ceiling runner (Item 2A) is installed within the deflection channel to maintain a 1 in. gap between the top of the ceiling runner and the top of the deflection channel. The ceiling runner is not fastened to the deflection channel.
   - **B. Fill, Void or Cavity Material* – Sealant** – Min 5/8 in. thickness of fill material installed on each side of the wall between the top of the gypsum board and the bottom of floor, flush with each surface of wallboard.

GRABBER CONSTRUCTION PRODUCTS INC – GrabberGard IFC

HW-D-0356

CONFIGURATION B

2. **Wall Assembly** – The 1 or 2 hr fire rated gypsum wallboard/steel stud wall assembly shall be constructed of the materials and in the manner described in the individual U400 or V400 - Series Wall or Partition Design in the UL Fire Resistance Directory and shall include the following construction features:

   A. Steel Floor and Ceiling Runners – Floor and Ceiling runners of wall assembly shall consist of galv steel channels sized to accommodate steel studs (Item 2B). Ceiling runner is secured to floor with steel masonry anchors spaced a max of 24 in. OC.

   A2. Light Gauge Framing* – Slotted Ceiling Runner – As an alternate to the ceiling runner in Item 2A, slotted ceiling runner to consist of galv steel channel with slotted flanges sized to accommodate steel studs (Item 2B). Slotted ceiling runner is secured to floor with steel masonry anchors spaced max 24 in. OC.

   METAL-LITE – The System
   BRADY CONSTRUCTION INNOVATIONS INC,
   DBA SLIPTRACK SYSTEMS, INC – SLP-TRK

   A3. Light Gauge Framing* – Clipped Ceiling Runner – As an alternate to the ceiling runner in Item 2A, 2A1, clipped runner to consist of galv steel channel with clips preformed in track flanges which positively engage the inside flange of the steel studs (Item 2B). Track sized to accommodate steel studs (Item 2B). Track flanges to be min 2-1/2 in. Clipped ceiling runner installed to concrete floor (Item 1) with steel masonry anchors spaced max 24 in. OC.

   TOTAL STEEL SOLUTIONS LLC – Snap Trak

   A4. Light Gauge Framing* – Vertical Deflection Ceiling Runner – As an alternate to the ceiling runner in Item 2A, 2A1 or 2A2, vertical deflection ceiling runner to consist of galv steel channel with slotted vertical deflection clips mechanically fastened within runner. Slotted clips, provided with step bushings, for permanent fastening of steel studs. Vertical deflection ceiling runner installed to concrete floor (Item 1) with steel masonry anchors spaced max 24 in. OC.

   THE STEEL NETWORK INC – VertiTrack VTD358, VTD400, VTD600 and VTD800

   B. Studs – Steel studs to be min 3-5/8 in. wide. Studs cut 1/2 to 3/4 in. less in length than assembly height. Steel studs shall not be secured to ceiling runner when slotted ceiling runner (Item 2A1) is used, steel studs secured to slotted ceiling runner with No. 8 by 1/2 in. long wafer head steel screws at midheight of slot on each side of wall. When vertical deflection ceiling runner (Item 2A3) is used, steel studs secured to slotted vertical deflection clips, through bushings, with steel screws at mid-height of each slot. Stud spacing not to exceed 24 in. OC.

   C. Gypsum Board* – Gypsum board sheets to be installed to a min total thickness of 5/8 or 1-1/4 in. on each side of the wall for a 1 or 2 hr fire rated assemblies, respectively. Wall to be constructed as specified in the individual Wall and Partition Design in the UL Fire Resistance Directory, except that a nom 3/4 in. gap shall be maintained between the top of the gypsum board and the lower surface of the floor. The screws attaching the gypsum board to studs at the top of the wall shall be located 1in. below the bottom of the ceiling runner (Item 2A). The hourly fire rating of the joint system is dependent on the hourly fire rating of the wall.

3. **Fill, Void or Cavity Material* – Sealant** – Max separation between bottom of floor and top of wall is 3/4 in. The joint system is designed to accommodate a max 33 percent compression or extension from its installed width. Min 5/8 in. thickness of fill material installed on each side of the wall between the top of the gypsum board and the bottom of floor, flush with each surface of wallboard.

   GRABBER CONSTRUCTION PRODUCTS INC – GrabberGard IFC

***Bearing the UL Classification Marking**

System No. HW-D-0357

Assembly Ratings 1, 2, 3 and 4 Hr (See Item 2)
L Rating at Ambient – Less than 1 CFM/Lin Ft.
L Rating at 400 F – Less than 1 CFM/Lin Ft.
Nominal Joint Width – 3/4 in.
Class II Movement Capabilities – 33% Compression or Extension

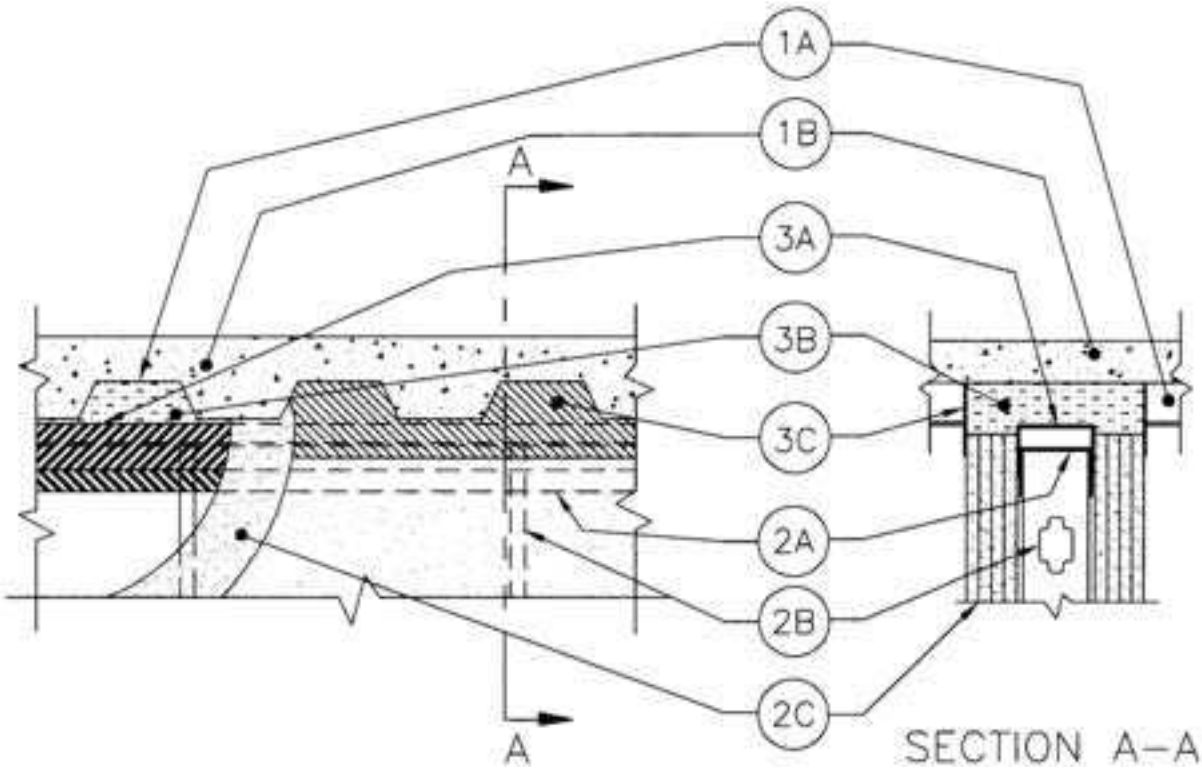

1. **Floor Assembly** – The fluted steel deck/concrete floor assembly shall be constructed of the materials and in the manner described in the individual Floor-Ceiling Design in the UL Fire Resistance Directory and shall include the following construction features:

   A. Steel Floor and Form Units* – Max 3 in. deep galv fluted units.

   B. Concrete – Min 2-1/2 in. thick reinforced concrete, as measured from the top plane of the floor units.

   1A. Roof Assembly (Not Shown) – As an alternative to the floor assembly, a fire-rated fluted steel deck roof assembly may be used. The roof assembly shall be constructed of the materials and in the manner described in the individual P900 Series Roof-Ceiling Design in the UL Fire Resistance Directory. **The hourly rating of roof assembly shall be equal or greater than the hourly rating of the wall assembly and shall include the following construction features:**

   A. Steel Roof Deck – Max 3 in. deep galv steel fluted roof deck.

   B. Roof Insulation – Min 2-1/4 in. thick poured insulation concrete, as measured from the top plane of the floor units.

   C. Roof Covering* – Hot-mopped or cold-application materials compatible with insulating concrete.

HW-D-0357

2. **Wall Assembly** – The 1, 2, 3, or 4 hr fire rated gypsum board/steel stud wall assembly shall be constructed of the materials and in the manner described in the individual U400-Series Wall or Partition Design in the UL Fire Resistance Directory and shall include the following construction features:

A. Steel Floor and Ceiling Runners – Floor and ceiling runners of wall assembly shall consist of galv steel channels sized to accommodate steel studs (Item 2B). When U-shaped deflection channel (Item 3A) is used, ceiling runner installed within the deflection channel with 1 in. gap maintained between the top of ceiling runner and top of deflection plate. When deflection channel is not used, ceiling runner is secured to valleys of steel floor units (Item 1A) with steel fasteners or by welds spaced max 24 in. OC.

A1. Light Gauge Framing* – Slotted Ceiling Runner – As an alternate to the ceiling runner in Item 2A, slotted ceiling runner to consist of galv steel channel with slotted flanges sized to accommodate steel studs (Item 2B). Slotted ceiling runner is secured to floor with steel masonry anchors spaced max 24 in. OC. When slotted ceiling runner is used, deflection channel (Item 3A) shall not be used.

METAL-LITE – The System
BRADY CONSTRUCTION INNOVATIONS INC,
DBA SLIPTRACK SYSTEMS, INC – SLP-TRK

A2. Light Gauge Framing* – Clipped Ceiling Runner – As an alternate to the ceiling runner in Item 2A, 2A1, clipped runner to consist of galv steel channel with clips preformed in track flanges which positively engage the inside flange of the steel studs (Item 2B). Track sized to accommodate steel studs (Item 2B). Track flanges to be min 2-1/2 in. Clipped ceiling runner installed perpendicular to direction of fluted steel floor units and secured to valleys with steel fasteners spaced 24 in. OC. When clipped ceiling runner is used, deflection channel (Item 3A) shall not be used.

TOTAL STEEL SOLUTIONS LLC – Snap Trak

A3. Light Gauge Framing* – Vertical Deflection Ceiling Runner – As an alternate to the ceiling runner in Item 2A, 2A1 or 2A2, vertical deflection ceiling runner to consist of galv steel channel with slotted vertical deflection clips mechanically fastened within runner. Slotted clips, provided with step bushings, for permanent fastening of steel studs. Vertical deflection ceiling runner installed perpendicular to direction of fluted steel floor or roof deck and secured to valleys with steel fasteners spaced max 24 in. OC. When slotted ceiling runner is used, deflection channel (Item 3A) shall not be used.

THE STEEL NETWORK INC – VertiTrack VTD362, VTD400, VTD600 and VTD800

B. Studs – Steel studs to be min 3-5/8 in. wide. Studs cut 1/2 to 3/4 in. less in length than assembly height. Studs attached to ceiling runner with sheet metal screws a min of 1/2 in. below bottom of deflection channel, when deflection channel is used. When deflection channel is not used, studs shall not be secured to ceiling runner. When slotted ceiling runner (Item 2A1) is used, steel studs secured to slotted ceiling runner with No. 8 by 1/2 in. long wafer head steel screws at mid-height of slot on each side of wall. When vertical deflection ceiling runner (Item 2A3) is used, steel studs secured to slotted vertical deflection clips, through bushings, with steel screws at mid-height of each slot Stud spacing not to exceed 24 in. OC

C. Gypsum Board* – Gypsum board sheets installed to a min total thickness of 5/8,1-1/4,1-7/8 or 2-1/2 in. on each side of wall for 1,2,3 and 4 hr rated assemblies, respectively. Wall to be constructed as specified in the individual Wall and Partition Design in the UL Fire Resistance Directory, except that a nom 3/4 in. gap shall be maintained between the top of the gypsum board and the lower surface of the floor. The screws attaching the gypsum board to studs at the top of the wall shall be located 1 in. below the bottom of the deflection channel, when deflection channel is used. When deflection channel is not used, the screws attaching the gypsum board to studs at the top of the wall shall be located 1 in. below the bottom of the ceiling runner. The hourly fire rating of the joint system is dependent on the hourly fire rating of the wall.

HW-D-0357

1. **Joint System** – Max separation between bottom of floor and top of wall is 3/4 in. The joint system is designed to accommodate a max 33 percent compression or extension from its installed width. The joint system consists of a deflection channel, forming material and a fill material, as follows:

   A. **Deflection Channel – (Optional)** – A nom 3-5/8 in. wide by min 2 in. deep, min 24 ga. steel U-shaped channel. Deflection channel secured to valleys of steel floor units (Item 1A) with steel fasteners or by welds spaced max 24 in. OC. The ceiling runner (Item 2A) is installed within the deflection channel to maintain a 1 in. gap between the top of the ceiling runner and the top of the deflection channel. The ceiling runner is not fastened to the deflection channel.

   B. **Forming Material*** – Min 4-7/8 in. thickness of min 4 pcf density mineral wool batt insulation for 1 and 2 hr rated assemblies, min 7-3/8 in. and 8-5/8 in. thickness of min 4 pcf density mineral wool batt insulation for 3 and 4 hr rated assemblies, respectively, cut to the shape of the fluted deck, approximately 25 percent larger than the area of the flutes and compressed into flutes of the steel floor units between the top of the deflection channel and the steel deck, flush with both sides of wall. Additional pieces of min 5/8 in. thickness of min 4 pcf mineral wool batt insulation for 1 and 2 hr rated assemblies, min 1-7/8 in. and min 2-1/2 in. thickness of min 4 pcf density mineral wool batt insulation for 3 and 4 hr rated assemblies, respectively, cut into strips and compressed approximately 25 percent to fill the 3/4 in. gap between the top of the gypsum board and bottom of the steel floor units, flush with both sides of wall.

   IIG Minwool LLC – MinWool-1200 Safing
   Rock Wool Manufacturing Company – Delta Safing Board
   Thermafiber L L C - Type SAF

   C. **Fill, Void or Cavity Material*** – Min 1/16 in. (dry) thickness of fill material sprayed or brushed on each side of the wall in the flutes of the steel floor units and between the top of the gypsum board and the bottom of the steel floor units to completely cover mineral wool and overlap a min of 1 in. onto gypsum board and steel deck, on both sides of wall.

   GRABBER CONSTRUCTION PRODUCTS INC – GrabberGard EFS

***Bearing the UL Classification Marking**

System No. HW-D-0358

Assembly Ratings – 1 & 2 Hr
Nominal Joint Width – 1 in.
CLASS II Movement Capabilities – 25% Compression or Extension

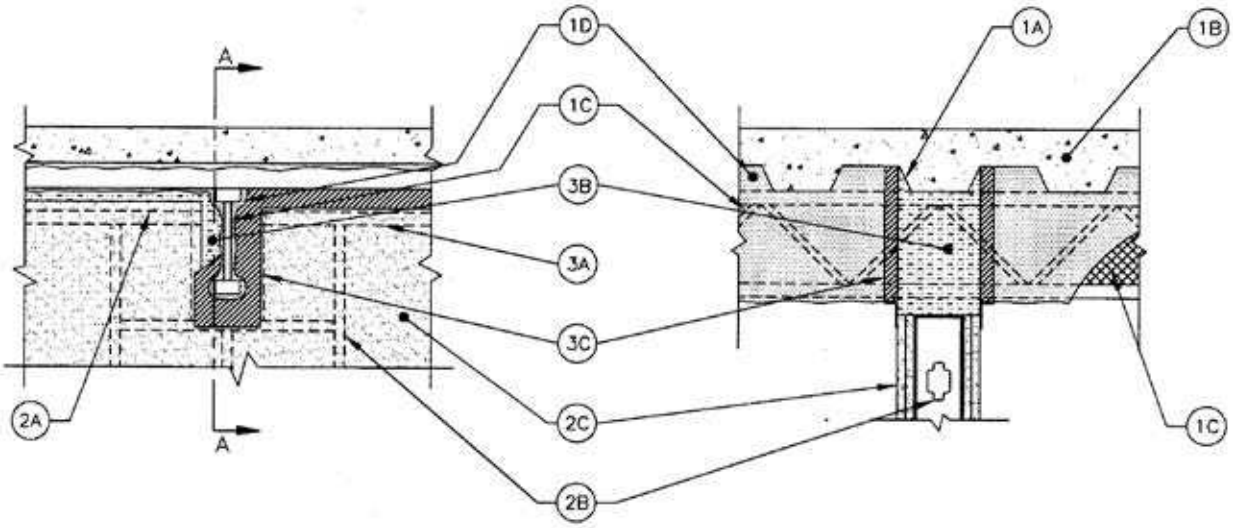

1. **Floor Assembly** – The fire-rated fluted steel deck/concrete floor assembly shall be constructed of the materials and in the manner described in the individual D700 Series Floor -Ceiling Design in the UL Fire Resistance Directory and shall include the following construction features:

   A. Steel Floor and Form Units* – Max 3 in. deep galv steel fluted floor units.

   B. Concrete – Min 2-1/2 in. thick reinforced lightweight or normal weight (100-150 pcf) concrete, as measured from the top plane of the floor units.

   C. Structural Steel Support (Optional) – Steel beam or open-web steel joist, as specified in the individual D700 Series Floor-Ceiling Design, used to support steel floor units. Structural steel support oriented perpendicular to wall assembly. Where open-web steel joists pass through the fire rated wall, 3/8 in. diamond mesh expanded steel lath having a nom weight of 1.7 to 3.4 lb per sq yd shall be secured to one side of each joist with galvanized steel tie wire and the lath shall be fully covered with spray-applied fire resistive material with no min thickness requirement.

   D. Spray-Applied Fire Resistive Materials* – After installation of the ceiling runner (Item 2A) or deflection channel (Item 3A, if used), steel floor units and structural steel supports to be sprayed in accordance with the specifications in the individual D700 Series Design.

   WR Grace & Co. Conn Construction Products Div. – Type MK-6/HY.

2. **Wall Assembly** – The 1 or 2 hr fire rated gypsum board/steel stud wall assembly shall be constructed of the materials and in the manner described in the individual U400 - Series Wall or Partition Design in the UL Fire Resistance Directory and shall include the following construction features:

   A. Steel Floor and Ceiling Runners – Floor and ceiling runners of wall assembly shall consist of galv steel channels sized to accommodate steel studs (Item 2B). Ceiling runner to be provided with min 1-1/4 in. to max 3 in. flanges. When deflection channel (Item 3A) is used, ceiling runner is to nest within the deflection channel with 1/2 in. to 1 in. gap maintained between the top of ceiling runner and top of the deflection channel. When deflection channel is not used, ceiling runner to be provided with 3 in. flanges and secured to steel floor units (Item 1A) with steel fasteners or by welds spaced max 24 in. OC. Ceiling runner to be centered beneath and parallel with valley of steel floor units. A clearance of 1 to 1-1/4 in. shall be maintained between the end of the ceiling runner or deflection channel and the spray applied fire resistive material on the structural steel support members.

11. **Light Gauge Framing* – Slotted Ceiling Runner** – As an alternate to the ceiling runner in Item 2A, slotted ceiling runner to consist of galv steel channel with slotted flanges sized to accommodate steel studs (Item 2B). Slotted ceiling runner installed perpendicular to direction of fluted steel floor units and secured to valleys with steel fasteners spaced max 24 in. OC. When slotted ceiling runner is used, deflection channel (Item 3A) shall not be used.

METAL-LITE – The System
BRADY CONSTRUCTION INNOVATIONS INC.,
DBA SLIPTRACK SYSTEMS, INC – SLP-TRK

12. **Light Gauge Framing* – Clipped Ceiling Runner** – As an alternate to the ceiling runner in Item 2A, 2A1, clipped runner to consist of galv steel channel with clips preformed in track flanges which positively engage the inside flange of the steel studs (Item 2B). Track sized to accommodate steel studs (Item 2B). Track flanges to be min 2-1/2 in. Clipped ceiling runner installed perpendicular to direction of fluted steel floor units and secured to valleys with steel fasteners spaced 24 in. OC. When clipped ceiling runner is used, deflection channel (Item 3A) shall not be used.

TOTAL STEEL SOLUTIONS LLC – Snap Trak\

13. **Light Gauge Framing* – Vertical Deflection Ceiling Runner** – As an alternate to the ceiling runner in Item 2A, 2A1 or 2A2, vertical deflection ceiling runner to consist of galv steel channel with slotted vertical deflection clips mechanically fastened within runner. Slotted clips, provided with step bushings, for permanent fastening of steel studs. Vertical deflection ceiling runner installed perpendicular to direction of fluted steel floor or roof deck and secured to valleys with steel fasteners spaced max 24 in. OC. When slotted ceiling runner is used, deflection channel (Item 3A) shall not be used.

THE STEEL NETWORK INC – VertiTrack VTD358, VTD400, VTD600 and VTD800

A. **Studs** – Steel studs to be min 3-5/8 in. wide. Studs cut 1/2 to 3/4 in. less in length than with bottom nesting in and secured to floor runner. When deflection channel (Item 3A) is used, steel studs attached to ceiling runner (Item 2A) with sheet metal screws located 1/2 in. below bottom of deflection channel. When deflection channel is not used, studs to nest in ceiling runner without attachment. When slotted ceiling runner (Item 2A1) is used, steel studs secured to slotted ceiling runner with No. 8 by 1/2 in. long wafer head steel screws at midheight of slot on each side of wall. When vertical deflection ceiling runner (Item 2A3) is used, steel studs secured to slotted vertical deflection clips, through bushings, with steel screws at mid-height of each slot. A framed opening shall be constructed around each structural steel support member. A min clearance of 1 in. to a max clearance of 3 in. shall be maintained between the framing and spray applied fire resistive material on the two sides of the structural support member. The clearance between the framing and the spray applied fire resistive material on the bottom of the structural steel support member shall be min 1/2 in. to max 1 in. Stud spacing not to exceed 24 in. OC

B. **Gypsum Board*** – Gypsum Wallboard sheets installed to a min total thickness of 5/8 in. and 1-1/4 in. on each side of wall for 1 and 2 hr rated assemblies, respectively. Wall to be constructed as specified in the individual U400 Series Design in the UL Fire Resistance Directory, except that a max nom 1 in. gap shall be maintained between the top of the gypsum board and the spray applied fire resistive material on the steel floor units and min 1/2 in. to max 1 in. gap shall be maintained between the top edge of the gypsum board and the spray applied fire resistive material on the structural steel support member. The screws attaching the gypsum board to the studs along the top of the wall shall be located 1 in. below the bottom of the deflection channel, when deflection channel is used. When deflection channel is not used, the screws attaching the gypsum board at the top of the wall shall be located 1 in. below the bottom of the ceiling runner.

The hourly fire rating of the joint system is equal to the hourly fire rating of the wall.

HW-D-0358

1. **Joint System** – Max separation between bottom of the spray applied fire resistive material on the steel floor units and top of gypsum board (at time of installation of joint system) is 1 in. Max separation between spray applied fire resistive material on bottom of structural support member and framed opening in top of wall is 1 in. The joint system is designed to accommodate a max 25 percent compression or extension from its installed width as measured between the spray applied fire resistive material on the steel floor units and the top of the gypsum board. The joint system consists of a forming material and fill materials, with or without deflection channel (Item 3A), as follows:

   A. **Deflection Channel – (Optional)** – Min 24 gauge galv steel channel, 3 in. deep, sized to accommodate ceiling runner (Item 2A). Deflection channel to be centered beneath and parallel with valley of steel floor unit and secured to steel floor unit with steel fasteners or by welds spaced max 24 in. OC. The ceiling runner (Item 2A) is installed within the deflection channel to maintain a 1/2 in. to 1 in. gap between the top of the ceiling runner and the top of the deflection channel. A clearance of 1 to 1-1/4 in. shall be maintained between the end of the deflection channel and the spray applied fire resistive material on the structural steel support members. The ceiling runner nest inside the deflection channel without attachment.

   B. **Forming Material** – Min 4 pcf density mineral wool batt insulation cut to a length approximately the same as the overall thickness of wall and inserted cut edge first into the spaces between the spray-applied fire resistive material on the structural steel member and the framed notch at the top of the wall, flush with the gypsum board surface on both sides of the wall. The thickness of forming material shall be sufficient to attain a min compression of 33 percent between the sides of the framed notch and the protected structural steel member and between the bottom of the framed notch and bottom of the protected structural steel member. Additional sections of mineral wool batt insulation are compressed 33 percent in thickness and are installed cut edge first to completely fill the gap above the top of the gypsum board, flush with both surfaces of wall.

   Fibrex Insulations Inc. – FBX Safing Insulation
   IIG Minwool LLC – MinWool-1200 Safing
   Rock Wool Manufacturing Co. – Delta Board
   Roxul Asia SDN BHD – Type SAF
   Roxul – Type Safe
   Thermafiber, LLC – Type SAF

   C. **Fill, Void or Cavity Material*** – Min 1/16 in. wet thickness of fill material sprayed or brushed over the forming material on each side of the wall. Fill material to overlap a min of 1 in. onto gypsum board and a min 2 in. onto the spray applied fire resistive material (Item 1D) on the steel floor unit and on the structural steel support member on both sides of wall.

   GRABBER CONSTRUCTION PRODUCTS INC – GrabberGard EFS

***Bearing the UL Classification Marking**

System No. HW-D-0359

Assembly Rating – 2 Hr
L Rating at Ambient – Less than 1 CFM/Lin. Ft.
L Rating at 400°F – Less that 1 CFM/Lin. Ft.
Nominal Joint Width – 1 in.
Class II Movement Capabilities – 25% Compression or Extension

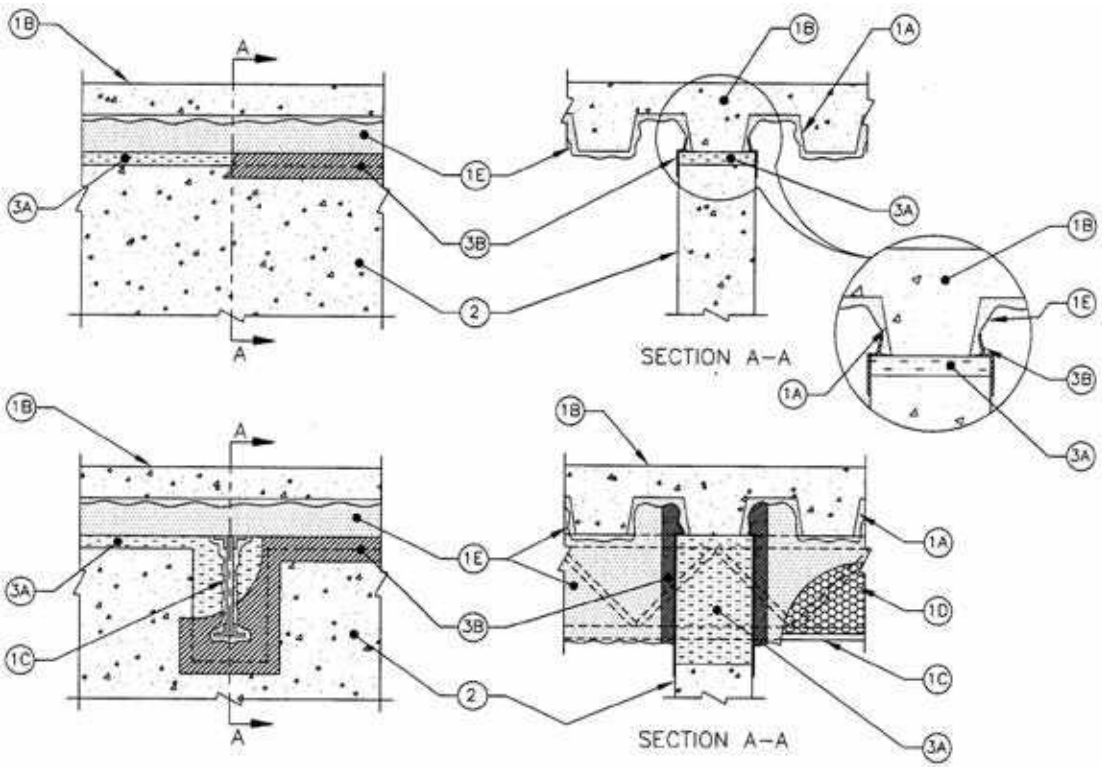

1. **Floor Assembly** – The fire-rated fluted steel deck/concrete floor assembly shall be constructed of the materials and in the manner described in the individual D700 Series Floor -Ceiling Design in the UL Fire Resistance Directory and shall include the following construction features:

   A. Steel Floor and Form Units* – Max 3 in. deep galv steel fluted floor units.

   B. Concrete - Min 2-1/2 in. thick reinforced concrete, as measured from the top plane of the floor units.

   C. Structural Steel Support (Optional) – Steel beam or open-web steel joist, as specified in the individual D700 Series Floor-Ceiling Design, used to support steel floor units. Structural steel support oriented perpendicular to wall assembly.

   D. Steel Lath – Where open-web steel joists pass through the fire rated wall, 3/8 in. diamond mesh expanded steel lath having a nom weight of 1.7 to 3.4 lb per sq yd shall be secured to one side of each joist with steel tie wire and the lath shall be fully covered with spray-applied fire resistive material with no min thickness requirement.

   E. Spray-Applied Fire Resistive Materials* – Prior to installation of the forming material (Item 3A) and sealant (Item 3B), steel floor units and structural steel supports to be sprayed with the thickness of material specified in the individual D700 Series Design. Material is to be excluded from the steel deck in the area immediately above the wall. The spray applied fire resistive material is mixed with water in accordance with the mixing instructions on the bag. The min average density of the spray applied fire resistive material shall be 15 pcf with a min individual density of 14 pcf. Dee Design Information Section in Volume 1 of the Fire Resistance Directory for method of density determination.

   WR Grace & Co. Conn Construction Products Div. – Type MK-6/HY.

HW-D-0359

1. **Wall Assembly** – Min 6-1/8 in. thick reinforced lightweight or normal weight (100-150 pcf) concrete. Wall may also be constructed of any UL Classified **Concrete Block***. Wall assembly to be centered beneath and parallel with valley of steel floor unit.
   See **Concrete Block** (CAZT) category in Fire Resistance Directory for names of manufacturers.

2. **Joint System** – Max separation between bottom plane of steel floor unit and top of concrete wall (at time of installation of joint system) is 1 in. Max separation between spray applied fire resistive material on bottom of structural support member and notched opening in top of wall is 1 in. Max clearance between spray applied fire resistive material on sides of structural steel member and notched opening in top of wall in 3 in. The joint system is designed to accommodate a max 25 percent compression or extension from its installed width as measured between bottom plane of steel floor units and top of concrete wall. The joint system shall consists of forming and fill materials, as follows:

   A. **Forming Material*** – Nom 4 pcf density mineral wool batt insulation cut to a length approximately 1 in. longer than overall thickness of wall and inserted cut edge first into the spaces between the spray-applied fire resistive material on the structural steel member and the notched opening at the top of the wall. The thickness of forming material shall be sufficient to attain a min compression of 20 percent between the sides of the notched opening and the protected structural steel member and a min compression of 33 percent between the bottom of the notched opening and the bottom of the protected structural steel member. The mineral wool batt insulation is to be additionally compressed in the length direction such that it is flush with both surfaces of the wall. Additional min 8 in. wide sections of mineral wool batt insulation are compressed 50 percent in thickness and are installed cut edge first to completely fill the gap above the top of the wall. The forming material shall be flush with both surfaces of wall.

   Fibrex Insulations Inc. – FBX Safing Insulation
   IIG Minwool LLC – MinWool-1200 Safing
   Rock Wool Manufacturing Co. – Delta Board or Delta-8
   Roxul Asia SDH BHD – Type Safe
   Roxul – Type Safe
   Thermafiber, LLC – Type SAF

   B. **Fill, Void or Cavity Material*** – Min 1/8 in. thickness (dry) of fill material sprayed or brushed over the forming material on each side of the wall. Fill material to overlap a min of 1/2 in. onto the concrete wall and a min 2 in. onto the spray applied fire resistive material (Item 1E) on the steel floor unit and on the structural steel support member on both sides of wall.

   GRABBER CONSTRUCTION PRODUCTS INC – GrabberGard EFS

***Bearing the UL Classification Marking**

System No. HW-D-0368

Assembly Ratings 1 & 2 Hr (See Item 2)
Nominal Joint Width –3/4 in.
Class II Movement Capabilities – 33% Compression or Extension

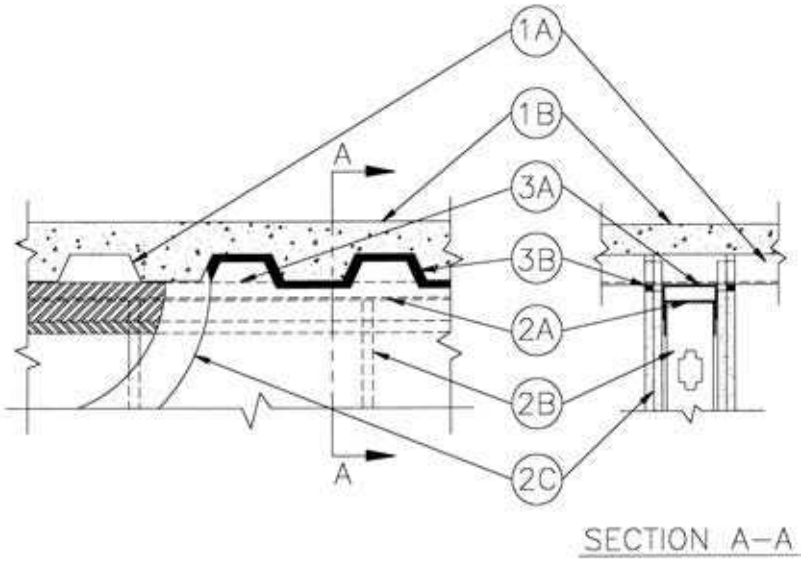

1. **Floor Assembly** – The fluted steel deck/concrete floor assembly shall be constructed of the materials and in the manner described in the individual Floor-Ceiling Design in the UL Fire Resistance Directory and shall include the following construction features:

   A. Steel Floor and Form Units* – Max 3 in. deep galv fluted units.

   B. Concrete – Min 2-1/2 in. thick reinforced concrete, as measured from the top plane of the floor units.

1A. **Roof Assembly (Not Shown)** – As an alternative to the floor assembly, a fire-rated fluted steel deck roof assembly may be used. The roof assembly shall be constructed of the materials and in the manner described in the individual P900 Series Roof-Ceiling Design in the UL Fire Resistance Directory. The hourly rating of roof assembly shall be equal or greater than the hourly rating of the wall assembly and shall include the following construction features:

   A. Steel Roof Deck – Max 3 in. deep galv steel fluted roof deck.

   B. Roof Insulation – Min 2-1/4 in. thick poured insulation concrete, as measured from the top plane of the floor units.

   C. Roof Covering* – Hot-mopped or cold-application materials compatible with insulating concrete.

2. **Wall Assembly** – The 1 or 2 hr fire rated gypsum board/steel stud wall assembly shall be constructed of the materials and in the manner described in the individual U400 - Series Wall or Partition Design in the UL Fire Resistance Directory and shall include the following construction features:

   A. Steel Floor And Ceiling Runners – Floor and ceiling runners of wall assembly shall consist of galv steel channels sized to accommodate steel studs (Item 2B). When U-shaped deflection channel (Item 3A) is used, ceiling runner installed within the deflection channel with 1 in. gap maintained between the top of ceiling runner and top of deflection channel. When deflection channel is not used, ceiling runner is secured to valleys of steel floor units (Item 1A) with steel fasteners or by welds spaced max 24 in. OC.

   A1. Light Gauge Framing* – Slotted Ceiling Runner – As an alternate to the ceiling runner in Item 2A, slotted ceiling runner to consist of galv steel channel with slotted flanges sized to accommodate steel studs (Item 2B). Slotted ceiling runner installed perpendicular to direction of fluted steel floor units and secured to valleys of steel fasteners spaced max 24 in. OC. When slotted ceiling runner is used, deflection channel (Item 3A) shall not be used.

METAL-LITE INC – The System
BRADY CONSTRUCTION INNOVATINS INC,
DBA SLIPTRACK SYSTEMS INC. – SLP-TRK

FL0712

Underwriters Laboratories Inc.

HW-D-0368

11. **Light Gauge Framing* – Clipped Ceiling Runner** – As an alternate to the ceiling runner in Item 2A, 2A1, clipped ceiling runner to consist of galv steel channel with clips preformed in track flanges which positively engage the inside flange of the steel studs (Item 2B). Track sized to accommodate steel studs (Item 2B). Track flanges to be min 2-1/2 in. Clipped ceiling runner installed perpendicular to direction of fluted steel floor units and secured to valleys with steel fasteners spaced 24 in. OC. When clipped ceiling runner is used, deflection channel (Item 3A) shall not be used.

TOTAL STEEL SOLUTIONS LLC – Snap Trak

12. **Light Gauge Framing*** – Vertical Deflection Ceiling Runner – As an alternate to the ceiling runner in Item 2A, 2A1 or 2A2, vertical deflection ceiling runner to consist of galv steel channel with slotted vertical deflection clips mechanically fastened within runner. Slotted clips, provided with step bushings, for permanent fastening of steel studs. Vertical deflection ceiling runner installed perpendicular to direction of fluted steel floor or roof deck and secured to valleys with steel fasteners spaced max 24 in. OC. When slotted ceiling runner is used, deflection channel (Item 3A) shall not be used.

THE STEEL NETWORK INC – VertiTrack VTD362, VTD400, VTD600 and VTD800

A. **Studs** – Steel studs to be min 3-5/8 in. wide. Studs cut 1/2 to 3/4 in. less in length than assembly height. Studs attached to ceiling runner with sheet metal screws a min of 1/2 in. below bottom of deflection channel, when deflection channel is used. When deflection channel is not used, studs shall not be secured to ceiling runner. When slotted ceiling runner (Item 2A1) is used, steel studs secured to slotted ceiling runner with No. 8 by 1/2 in. long wafer head steel screws at mid-height of slot on each side of wall. Stud spacing not to exceed 24 in. OC.

B. **Gypsum Board*** – Gypsum board sheets to be installed to a min total thickness of 5/8 in or 1-1/4 in. on each side of the wall for a 1 or 2 hr fire rated wall, respectively. Wall to be constructed as specified in the individual Wall and Partition Design in the UL Fire Resistance Directory, except that the gypsum board is cut to fit the contour of the steel floor units with a nom 3/4 in. gap. The screws attaching the gypsum board to studs at the top of the wall shall be located 1 in. below the bottom of the deflection channel, when deflection channel is used. When deflection channel is not used, the screws attaching the gypsum board to studs at the top of the wall shall be located 1 in. below the bottom of the ceiling runner.
The hourly fire rating of the joint system is dependent on the hourly fire rating of the wall.

1. **Joint System** – Max separation between bottom of floor and top of wall is 3/4 in. The joint system is designed to accommodate a max 33 percent compression or extension from its installed width. The joint system consists of a deflection channel and a fill material, as follows:

A. **Deflection Channel – (Optional)** – A nom 3-5/8 in. wide by min 2 in. deep min 24 ga. steel U-shaped channel. Deflection channel secured to valleys of steel floor units (Item 1A) with steel fasteners or by welds spaced max 24 in. OC. The ceiling runner (Item 2A) is installed within the deflection channel to maintain a 1 in. gap between the top of the ceiling runner and the top of the deflection channel. The ceiling runner is not fastened to the deflection channel.

B. **Fill Void or Cavity Material* – Sealant** – Min 5/8 in. thickness of fill material installed on each side of the wall between the top of the gypsum board and all surfaces of the steel floor units, flush with each surface of gypsum board.

GRABBER CONSTRUCTION PRODUCTS INC – GrabberGard EFC

***Bearing the UL Classification Marking**

System No. HW-D-0369

Assembly Ratings – 2 Hr
Nominal Joint Width – 3/4 in.
Class II Movement Capabilities – 33% Compression or Extension

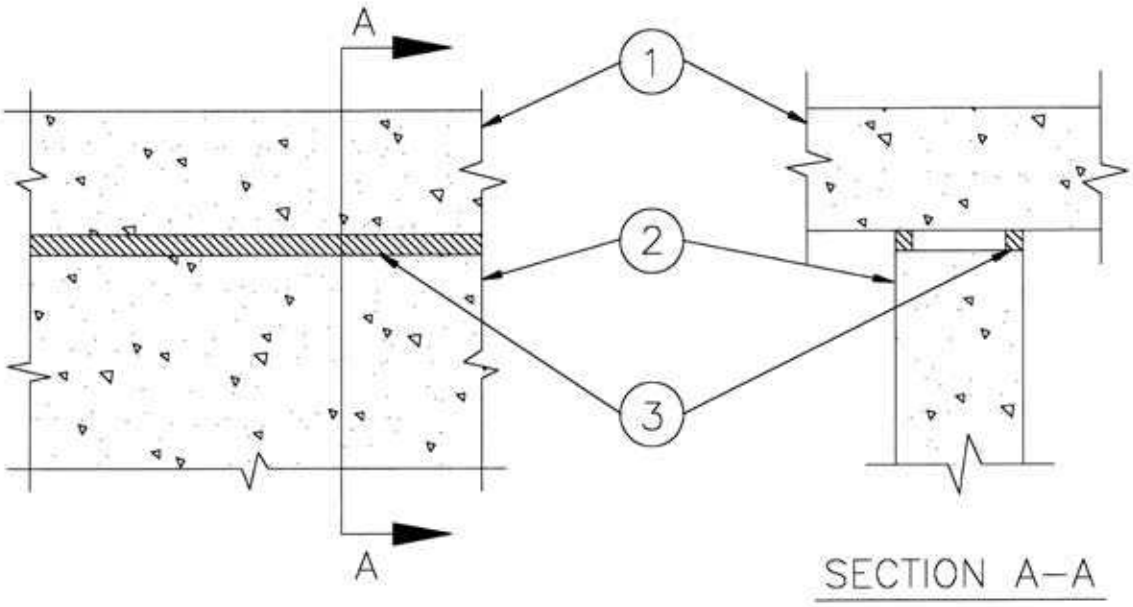

1. **Floor Assembly** – Min 4-1/2 in. thick reinforced lightweight or normal weight (100-150 pcf) concrete.
2. **Wall Assembly** – Min 4-7/8 in. thick reinforced lightweight or normal weight (100-150 pcf) structural concrete. Wall may also be constructed of any UL Classified **Concrete Blocks***.
   See **Concrete Blocks** (CAZT) category in the Fire Resistance Directory for names of manufacturers.
3. **Joint System** – Max separation between bottom of floor and top of wall is 3/4 in. The joint system is designed to accommodate a max 33 percent compression or extension from its installed width. Min 5/8 in. thickness of fill material installed on each side of the wall between the top of the wall and the bottom of the floor, flush with each surface of wall.

GRABBER CONSTRUCTION PRODUCTS INC – GrabberGard EFC

***Bearing the UL Classification Marking**

System No. HW-D-0370

Assembly Ratings 1 & 2 Hr (See Item 2)
Nominal Joint Width – 3/4 in.
Class II Movement Capabilities – 33% Compression or Extension

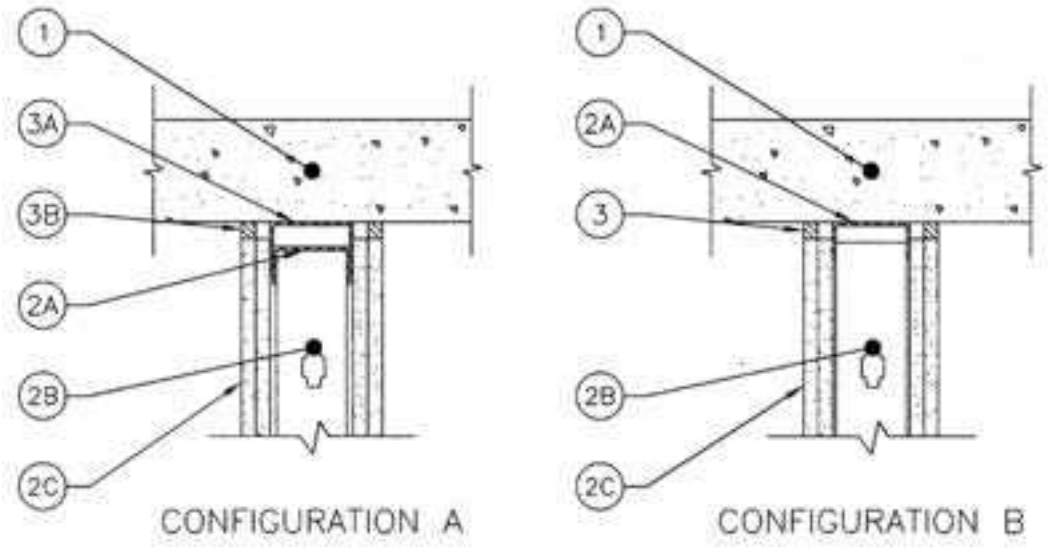

1. **Floor Assembly** – Min 4-1/2 in. thick reinforced lightweight or normal weight (100-150 pcf) concrete.

CONFIGURATION A

2. **Wall Assembly** – The 1 or 2 hr fire rated gypsum wallboard/steel stud wall assembly shall be constructed of the materials and in the manner described in the individual U400 or V400 - Series Wall or Partition Design in the UL Fire Resistance Directory and shall include the following construction features:
   - **A. Steel Floor and Ceiling Runners** – Floor and Ceiling runners of wall assembly shall consist of galv steel channels sized to accommodate steel studs (Item 2B). Ceiling runner to be installed within the deflection channel such that a 1 in. gap is maintained between the top of ceiling runner and top of deflection channel. Deflection channel is secured to floor with steel masonry anchors spaced a max of 24 in. OC.
   - **B. Studs** – Steel studs to be min 3-5/8 in. wide. Studs cut 1/2 to 3/4 in. less in length than assembly height. Studs attached to ceiling runner with sheet metal screws a min of 1/2 in. below bottom of deflection channel. Stud spacing not to exceed 24 in. OC.
   - **C. Gypsum Board*** – Gypsum board sheets to be installed to a min total thickness of 5/8 or 1-1/4 in. on each side of the wall for a 1 or 2 hr fire rated assemblies, respectively. Wall to be constructed as specified in the individual Wall and Partition Design in the UL Fire Resistance Directory, except that a nom 3/4 in. gap shall be maintained between the top of the gypsum board and the lower surface of the floor. The screws attaching the wallboard to studs at the top of the wall shall be located 1in. below the bottom of the U-shaped deflection channel (Item 3A).
   The hourly fire rating of the joint system is dependent on the hourly fire rating of the wall.
3. **Joint System – Max separation between bottom of floor and top of wall is 3/4 in. The joint system is designed to accommodate a max 33 percent compression or extension from its installed width. The joint system consists of a deflection channel and a fill material, as follows:**
   - **A. Deflection Channel** – A nom 3-5/8 in. wide by min 2 in. deep min 24 gauge (or heavier) steel U-shaped channel. Deflection channel secured to floor assembly with steel fasteners, spaced max 24 in. OC. The ceiling runner (Item 2A) is installed within the deflection channel to maintain a 1 in. gap between the top of the ceiling runner and the top of the deflection channel. The ceiling runner is not fastened to the deflection channel.
   - **B. Fill, Void or Cavity Material* – Sealant** – Min 5/8 in. thickness of fill material installed on each side of the wall between the top of the gypsum board and the bottom of floor, flush with each surface of wallboard.

GRABBER CONSTRUCTION PRODUCTS INC – GrabberGard EFC

HW-D-0370

CONFIGURATION B

2. **Wall Assembly** – The 1 or 2 hr fire rated gypsum wallboard/steel stud wall assembly shall be constructed of the materials and in the manner described in the individual U400 or V400 - Series Wall or Partition Design in the UL Fire Resistance Directory and shall include the following construction features:

A. Steel Floor and Ceiling Runners – Floor and Ceiling runners of wall assembly shall consist of galv steel channels sized to accommodate steel studs (Item 2B). Ceiling runner is secured to floor with steel masonry anchors spaced a max of 24 in. OC.

A1. Light Gauge Framing* – Slotted Ceiling Runner – As an alternate to the ceiling runner in Item 2A, slotted ceiling runner to consist of galv steel channel with slotted flanges sized to accommodate steel studs (Item 2B). Slotted ceiling runner is secured to floor with steel masonry anchors spaced max 24 in. OC.

METAL-LITE – The System
BRADY CONSTRUCTION INNOVATIONS INC,
DBA SLIPTRACK SYSTEMS, INC – SLP-TRK

A2. Light Gauge Framing* – Clipped Ceiling Runner – As an alternate to the ceiling runner in Item 2A, 2A1, clipped runner to consist of galv steel channel with clips preformed in track flanges which positively engage the inside flange of the steel studs (Item 2B). Track sized to accommodate steel studs (Item 2B). Track flanges to be min 2-1/2 in. Clipped ceiling runner installed perpendicular to direction of fluted steel floor units and secured to valleys with steel fasteners spaced 24 in. OC.

TOTAL STEEL SOLUTIONS LLC – Snap Trak

A3. Light Gauge Framing* – Vertical Deflection Ceiling Runner – As an alternate to the ceiling runner in Item 2A, 2A1 or 2A2, vertical deflection ceiling runner to consist of galv steel channel with slotted vertical deflection clips mechanically fastened within runner. Slotted clips, provided with step bushings, for permanent fastening of steel studs. Vertical deflection ceiling runner installed perpendicular to direction of fluted steel floor or roof deck and secured to valleys with steel fasteners spaced max 24 in. OC.

THE STEEL NETWORK INC – VertiTrack VTD362, VTD400, VTD600 and VTD800

B. Studs – Steel studs to be min 3-5/8 in. wide. Studs cut 1/2 to 3/4 in. less in length than assembly height. Steel studs shall not be secured to ceiling runner when slotted ceiling runner (Item 2A1) is used, steel studs secured to slotted ceiling runner with No. 8 by 1/2 in. long wafer head steel screws at mid-height of slot on each side of wall. When vertical deflection ceiling runner (Item 2A3) is used, steel studs secured to slotted vertical deflection clips, through bushings, with steel screws at mid-height of each slot Stud spacing not to exceed 24 in. OC.

C. Gypsum Board* – Gypsum board sheets to be installed to a min total thickness of 5/8 or 1-1/4 in. on each side of the wall for a 1 or 2 hr fire rated assemblies, respectively. Wall to be constructed as specified in the individual Wall and Partition Design in the UL Fire Resistance Directory, except that a nom 3/4 in. gap shall be maintained between the top of the gypsum board and the lower surface of the floor. The screws attaching the gypsum board to studs at the top of the wall shall be located 1in. below the bottom of the ceiling runner (Item 2A).
The hourly fire rating of the joint system is dependent on the hourly fire rating of the wall.

3. Fill, Void or Cavity Material* – Sealant – Max separation between bottom of floor and top of wall is 3/4 in. The joint system is designed to accommodate a max 33 percent compression or extension from its installed width. Min 5/8 in. thickness of fill material installed on each side of the wall between the top of the gypsum board and the bottom of floor, flush with each surface of wallboard.

GRABBER CONSTRUCTION PRODUCTS INC – GrabberGard EFC

***Bearing the UL Classification Marking**

System No. HW-D-0404

Assembly Rating – 1 & 2 Hr (See Item 2)
L Rating at Ambient – Less than 1 CFM/Lin Ft.
L Rating at 400°F – Less than 1 CFM/Lin Ft.
Nominal Joint Width – 1-1/2 in.
Class II Movement Capabilities – 25% Compression or Extension

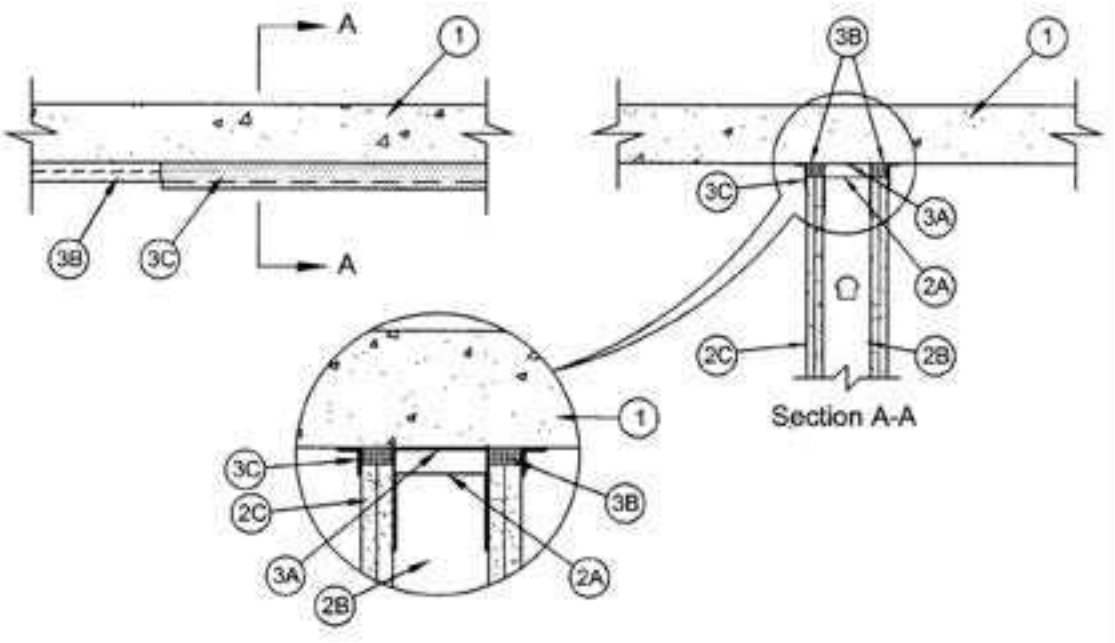

1. **Floor Assembly** – Min 4-1/2 in (114 mm) thick steel-reinforced lightweight or normal weight (100-150 pcf or 1600-2400 kg/m3) structural concrete.

2. **Wall Assembly** – The 1 or 2 hr fire rated gypsum board/steel stud wall assembly shall be constructed of the materials and in the manner described in the individual U400 or V400 Series Wall or Partition Design in the UL Fire Resistance Directory and shall include the following construction features:

   A. Steel Floor And Ceiling Runners – Floor and ceiling runners of wall assembly shall consist of galv steel channels sized to accommodate steel studs (Item 2B). Ceiling runner to be provided with 3 in. (76 mm) flanges. When U-shaped deflection channel (Item 3A) is used, ceiling runner installed within the deflection channel with 1 in. (25 mm) gap maintained between the top of ceiling runner and top of deflection channel. When deflection channel is not used, ceiling runner is secured to concrete floor slab with steel masonry anchors spaced max 24 in. (610 mm) OC.

   A1. Light Gauge Framing* – Slotted Ceiling Runner – As an alternative to the ceiling runner in Item 2A, slotted ceiling runner to consist of galv. steel channels with slotted flanges sized to accommodate steel studs (Item 2B). Slotted ceiling runner secured to concrete floor slab with steel masonry anchors spaced max 24 in. (610 mm) OC. When slotted ceiling runner is used, deflection channel (Item 3A) shall not be used.

   METAL-LITE INC – The System
   BRADY CONSTRUCTION INNOVATIONS INC,
   DBA SLIPTRACK SYSTEMS, INC. – SLP-TRK

   A2. Light Gauge Framing* – Clipped Ceiling Runner – As an alternate to the ceiling runner in Items 2A and 2A1, clipped runner to consist of galv steel channel with clips preformed in track flanges which positively engage the inside flange of the steel studs (Item 2B). Track sized to accommodate steel studs (Item 2B). Track flanges to be min 2-1/2 in. (64 mm). Clipped ceiling runner secured to concrete floor slab with steel masonry anchors spaced max 24 in. (610 mm) OC. When clipped ceiling runner is used, deflection channel (Item 3A) shall not be used.

   TOTAL STEEL SOLUTIONS L L C — Snap Trak

11. **Light Gauge Framing*** – Vertical Deflection Ceiling Runner – As an alternate to the ceiling runner in Items 2A, 2A1 and 2A2, vertical deflection ceiling runner to consist of galv steel channel with slotted vertical deflection clips mechanically fastened within runner. Slotted clips provided with step bushings for permanent fastening of steel studs. Vertical deflection ceiling runner secured to concrete floor slab with steel masonry anchors spaced max 24 in. (610 mm) OC. When vertical deflection ceiling runner is used, deflection channel (Item 3A) shall not be used.

THE STEEL NETWORK, INC. – VertiTrack VTD362, VTD400, VTD600 AND VTD800

12. **Light Gauge Framing* – Notched Ceiling Runner** – As an alternate to the ceiling runner in Items 2A through 2A3, notched ceiling runner to consist of C-shaped galv steel channel with notched return flanges sized to accommodate steel studs (Item 2B). Notched ceiling runner secured to concrete floor slab with steel masonry anchors spaced max 24 in. (610 mm) OC. When notched ceiling runner is used, deflection channel (Item 3A) shall not be used.

OLMAR SUPPLY INC – Type SCR

A. **Studs Steel** - Studs to be min 3-5/8 in. (92 mm) wide. Studs cut 1/2 to 3/4 in. (13 to 19 mm) less in length than assembly height with bottom nesting in and resting on floor runner and with top nesting in ceiling runner without attachment. When slotted ceiling runner (Item 2A1) is used, steel studs secured to slotted ceiling runner with No. 8 by 1/2 in. (13 mm) long wafer head steel screws at midheight of slot on each side of wall. When vertical deflection ceiling runner (Item 2A3) is used, steel studs secured to slotted vertical deflection, through bushings, with steel screws at midheight of each slot. Stud spacing not to exceed 24 in OC (610 mm).

B. **Gypsum Board*** – Gypsum board sheets installed to min total thickness of 5/8 in. and 1-1/4 in. (16 mm and 32 mm) on each side of wall for 1 and 2 hr rated assemblies, respectively. Wall to be constructed as specified in the individual Wall and Partition Design in the UL Fire Resistance Directory, except that a max 1-1/2 in. (38 mm) gap shall be maintained between the top of the gypsum board and the lower surface of the floor. The screws attaching the wallboard to studs (Item 2B) at the top of the wall shall be located 1 in. (25 mm) below the bottom of the deflection channel (Item 3A), when deflection channel is used. When deflection channel is not used, the screws attaching the gypsum board to studs at the top of the wall shall be located 1 in. (25 mm) below the bottom of the ceiling runner.
The hourly fire rating of the joint system is dependant of the hourly fire rating of the wall.

1. **Joint System** – Max separation between bottom of floor and top of wall is 1-1/2 in. (38 mm). The joint system is designed to accommodate a max 25 percent compression or extension from its installed width. The joint system consists of a deflection channel, forming material and a fill material, as follows:

A. **Deflection Channel – (Optional)** - A nom 3-5/8 in. (92 mm) wide by 3 in. (76 mm) deep min 24 ga steel U-shaped channel. Deflection channel secured to concrete floor slab with steel masonry anchors spaced max 24 in. OC (610 mm). The ceiling runner (Item 2A) is installed within the deflection channel to maintain a 1 in. (25 mm) gap between the top of the ceiling runner and the top of the deflection channel. The ceiling runner is not fastened to the deflection channel.

B. **Forming Material*** – Min 4 pcf (64 kg/m3) mineral wool batt insulation cut into 5/8 in. and 1-1/4 in. (16 and 32 mm) wide strips for 1 and 2 Hr rated assemblies, respectively. Mineral wool to be compressed 50 percent in thickness and installed edge first into gap between top of gypsum board and bottom of floor, flush with both sides of wall.

FIBREX INSULATIONS INC – FBX Safing Insulation
IIG MINWOOL LLC – MinWool-1200 Safing
ROCK WOOL MANUFACTURING CO – Delta Board or Delta -8
Roxul Asia SDB BHD – Type Safe
ROXUL INC – Type Safe
THERMAFIBER L L C – Type SAF

C. **Fill, Void or Cavity Material*** – Min 1/16 in. (1.6 mm) thickness (dry) of fill material sprayed or brushed on each side of the wall between the top of the gypsum board and the bottom of the floor to completely cover mineral wool and overlap a min of 1/2 in. (13 mm) onto gypsum board and floor on both sides of wall.

GRABBER CONSTRUCTION PRODUCTS INC – GrabberGard EFS

***Bearing the UL Classification Marking**

FL0712

Underwriters Laboratories Inc.

System No. HW-D-0531

Assembly Ratings 1 & 2 Hr (See Item 2)
Nominal Joint Width – 3/4 in.
Class II and III Movement Capabilities – 33% Compression or Extension

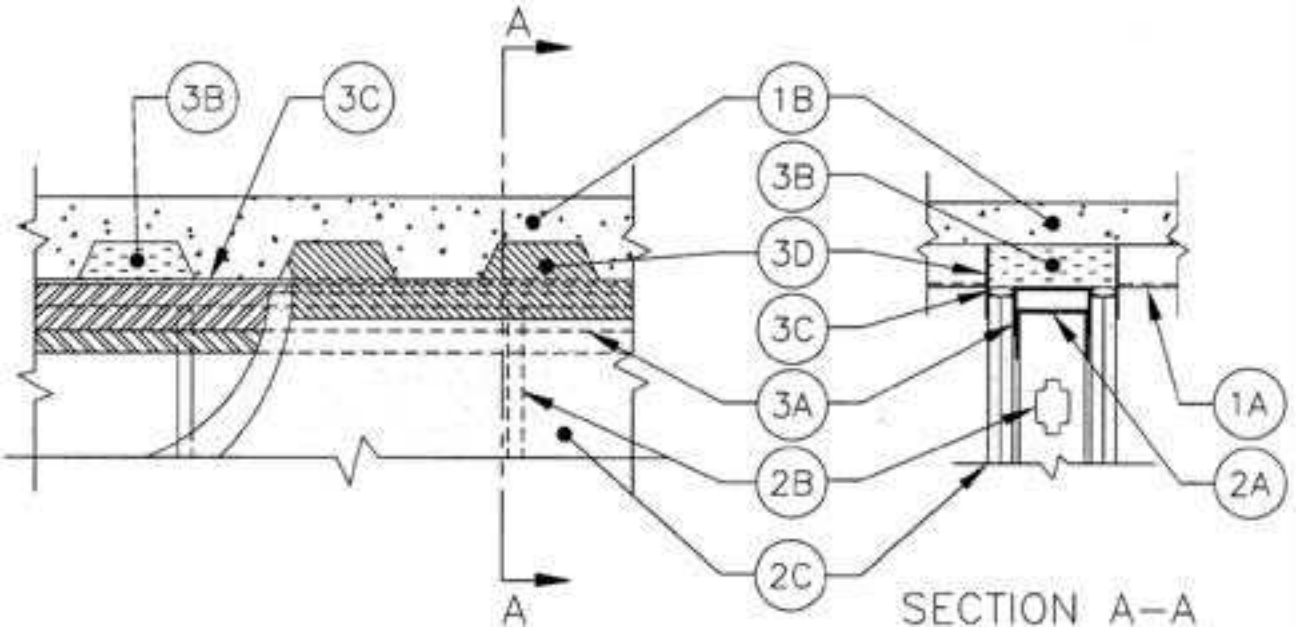

1. **Floor Assembly** – The fluted steel deck/concrete floor assembly shall be constructed of the materials and in the manner described in the individual Floor-Ceiling Design in the UL Fire Resistance Directory and shall include the following construction features:

   A. Steel Floor and Form Units* – Max 3 in. (76 mm) deep galv fluted units.

   B. Concrete – Min 2-1/2 in. (64 mm) thick reinforced lightweight or normal weight (100-150 pcf or 1600-2400kg/m3) concrete, as measured from the top plane of the floor units.

1A. **Roof Assembly – (not shown)** – As an alternate to the floor assembly a fire-rated fluted steel deck roof assembly may be used. The roof assembly shall be constructed of the materials and in the manner described in the individual P900 series Roof-Ceiling Design in the UL Fire Resistance Directory. The hourly rating of the roof assembly shall be equal to or greater than the hourly rating of the wall assembly and shall include the following construction features:

   A. Steel Roof Deck – Max 3 in. (76 mm) deep galv. steel fluted roof deck.

   B. Roof Insulation – Min 2-1/4 in. (57 mm) thick poured insulating concrete, as measured from the top plane of the floor units.

   C. Roof Covering – Hot-mopped or cold application materials compatible with insulating concrete.

2. **Wall Assembly** – The 1 or 2 hr fire rated gypsum wallboard/steel stud wall assembly shall be constructed of the materials and in the manner described in the individual U400 or V400 Series Wall and Partition Design in the UL Fire Resistance Directory and shall include the following construction features:

   A. **Steel Floor and Ceiling Runners** – Floor and ceiling runners of wall assembly shall consist of galv steel channels sized to accommodate steel studs (Item 2B). When U-shaped deflection channel (Item 3A) is used, ceiling runner installed within the deflection channel with 1 in. (25 mm) gap maintained between the top of ceiling runner and top of deflection plate. When deflection channel is not used, ceiling runner is secured to valleys of steel floor units (Item 1A) with steel fasteners or by welds spaced max 24 in. (610 mm) OC.

   B. **Studs** – Steel studs to be min 3-5/8 in. (92 mm) wide. Studs cut 5/8 in. (16 mm) less in length than assembly height with bottom nesting in and resting on floor runner and with top nesting in ceiling runner without attachment. Stud spacing not to exceed 24 in. (610 mm).

   C. **Gypsum Board*** – Gypsum board sheets installed to a min total thickness of 5/8 in. (16 mm) on each side of wall. Wall to be constructed as specified in the individual Wall and Partition Design in the UL Fire Resistance Directory, except that a nom 3/4 in. (19 mm) gap shall be maintained between top of the wallboard and the bottom of the steel floor units and the top row of screws shall be installed into the studs 1 in. (25 mm) below the bottom of the ceiling runner or deflection channel, when used.

   The hourly fire rating of the joint system is equal to the hourly fire rating of the wall.

3. **Joint System** – Max width of joint (at time of installation of joint system) is 3/4 in. (19 mm). The joint system is designed to accommodate a max 33 percent compression or extension from its installed width. The joint system consists of the following:

   A. **Deflection Channel (Optional)** – A nom 3-5/8 in. (92 mm) wide by min 2 in. (51 mm) deep, min 24 gauge steel U-shaped channel. Deflection channel secured to valleys of steel floor units (Item 1A) with steel fasteners or by welds spaced max 24 in. (610 mm) OC. The ceiling runner (Item 2A) is installed within the deflection channel to maintain a 1 in. (25 mm) gap between the top of the ceiling runner and the top of the deflection channel. The ceiling runner is not fastened to the deflection channel.

   B. **Forming Material*** – Min 4-7/8 in. (124 mm) and 6-1/8 in. (156 mm) thickness of min 4 pcf (64 kg/m3) density mineral wool batt insulation for 1 and 2 hr rated assemblies, respectively, cut to the shape of the fluted deck, approximately 20 percent larger than the area of the flutes and compressed into flutes of the steel floor units between the top of the ceiling runner and the steel deck, flush with the surface of the wall on both sides.

   Fibrex Insulation, Inc. – FBX Safing Insulation
   IIG Minwool LLC – MinWool-1200 Safing
   Rock Wool Manufacturing Co – Delta Safing Board
   Thermafiber LLC – Type SAF

   C. **Backer Rod** – Nom 1 in. (25 mm) diam polyethylene backer rod compressed and firmly packed into the nom 3/4 in. (19 mm) gap between the top of the gypsum board and the bottom of the steel deck and the bottom of the forming material in area of flutes. Backer rod compressed flush with both surfaces of the wall.

   D. **Fill, Void or Cavity Material*** – Min 1/16 in. (1.6 mm) dry thickness of fill material sprayed or brushed on each side of the wall in the flutes of the steel floor units and between the top of the gypsum board and the bottom of the steel floor units to completely cover mineral wool and backer rod and overlap a min of 1 in. (25 mm) onto gypsum board and steel deck on both sides of wall.

   GRABBER CONSTRUCTION PRODUCTS INC – GrabberGard EFS

***Bearing the UL Classification Marking**

System No. HW-D-0532

Assembly Rating – 2 Hr
L Rating at Ambient – Less than 1 CFM/Lin Ft.
L Rating at 400°F – Less than 1 CFM/Lin Ft.
Nominal Joint Width – 1 in.
Class II Movement Capabilities – 25% Compression or Extension

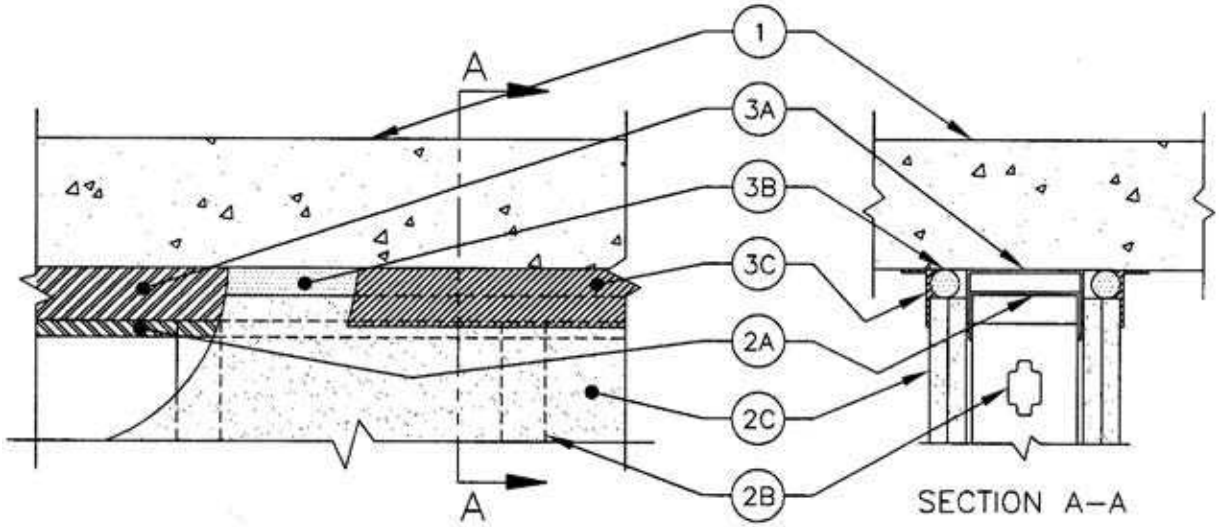

1. **Floor Assembly** – Min 4-1/2 in. (114 mm) thick reinforced lightweight or normal weight (100-150 pcf or 1600-2400 kg/m3) concrete.

2. **Wall Assembly** – The 2 hr fire rated gypsum wallboard/steel stud wall assembly shall be constructed of the materials and in the manner described in the individual U400 or V400 - Series Wall or Partition Design in the UL Fire Resistance Directory and shall include the following construction features:

   A. Steel Floor and Ceiling Runners – Floor and ceiling runners of wall assembly shall consist of galv steel channels sized to accommodate steel studs (Item 2B). When U-shaped deflection channel (Item 3A) is used, ceiling runner installed within the deflection channel with 1 in. (25 mm) gap maintained between the top of ceiling runner and top of deflection channel. When deflection channel is not used, ceiling runner is secured to floor assembly (Item 1) with steel masonry anchors spaced max 24 in. (610 mm) OC.

   A1. Light Gauge Framing* – Slotted Ceiling Runner – As an alternate to the ceiling runner in Item 2A, slotted ceiling runner to consist of galv steel channel with slotted flanges sized to accommodate steel studs (Item 2B). Slotted ceiling runner installed with steel fasteners spaced max 24 in. (610 mm) OC. When slotted ceiling runner is used, deflection channel (Item 3A) shall not be used.

   Brady Construction Innovations Inc.,
   DBA Sliptrack Systems, Inc. – SLP-TRK
   Clarkwestern Building Systems Inc – Type SLT, SLT-H
   Metal-Lite, Inc. – The System
   SCAFCO Steel Stud Manufacturing CO
   Telling Industries LLC – True Action Deflection Track

   A2. Light Gauge Framing* – Vertical Deflection Ceiling Runner – As an alternate to the ceiling runners in Item 2A and 2A1, vertical deflection ceiling runner to consist of galv steel channel with slotted vertical deflection clips mechanically fastened with runner. Slotted clips provided with step bushing for permanent fastening of steel studs. Flanges sized to accommodate steel studs (Item 2B). Vertical deflection ceiling runner installed with steel fastened spaced max 24 in. (610 mm) OC. When vertical deflection ceiling runner is used, deflection channel (Item 3A) shall not be used.

   The Steel Network, Inc. – VertiTrack VTD362, VTD400, VTD600 and VTD800

11. **Light Gauge Framing* – Clipped Ceiling Runner** – As an alternate to the ceiling runner in Items 2A, 2A1 and 2A2, clipped runner to consist of galv steel channel with clips performed in track flanges which positively engaged the inside flange of the steel studs (Item 2B). Track sized to accommodate steel studs (Item 2B). Track flanges to be min 3-1/4 in. (83 mm). Clipped ceiling runner installed with steel fasteners spaced max 24 in. (610 mm) OC. When clipped ceiling runner is used, deflection channel (Item 3A) shall not be used.
    Total Steel Solutions, LLC – Snap Trak

A. **Studs –** Steel studs to be min 3-5/8 in. (92 mm) wide. Studs cut 1/2 to 3/4 in. (13 to 19 mm) less in length than assembly height. Studs attached to ceiling runner with sheet metal screws a min of 1/2 in. (13 mm) below bottom of deflection channel, when deflection channel is used. When deflection channel is not used, studs shall not be secured to ceiling runner. When slotted ceiling runner is used (Item 2A1), steel studs secured to slotted ceiling runner with No. 8 by 1/2 in. (13 mm) long wafer head steel screws at midheight of slot on each side of wall. When vertical deflection ceiling runner (Item 2A3) is used, steel studs secured to slotted vertical deflection clips, through bushings, with steel screws at midheight of each slot. Stud spacing not to exceed 24 in. (610 mm) OC.

B. **Gypsum Board* –** Gypsum board sheets to be installed to a min total thickness of 1-1/4 in. (32 mm) on each side of the wall. Wall to be constructed as specified in the individual Wall and Partition Design in the UL Fire Resistance Directory, except that a nom 1 in. (25 mm) gap shall be maintained between the top of the gypsum board and lower surface of the floor. The screws attaching the wallboard to studs at the top of the wall shall be located 1 in. (25 mm) below the bottom of the ceiling runner or deflection channel (Item 3A).

1. **Joint System – Max separation between bottom of floor and top of wall is 1 in. (25 mm) The joint system is designed to accommodate a max 25 percent compression or extension from its installed width.** The joint system consists of a deflection channel and a fill material, as follows:

A. **Deflection Channel –** (Optional) – A nom 3-5/8 in. (92 mm) wide by min 2 in. (51 mm) deep min 24 ga. steel U-shaped channel. Deflection channel secured to Floor with steel masonry anchors spaced max 24 in. (610 mm) OC. The ceiling runner (Item 2A) is installed within the deflection channel to maintain a 1 in. gap between the top of the ceiling runner and the top of the deflection channel. The ceiling runner is not fastened to the deflection channel.

B. **Backer Rod –** Nom 1-1/4 in. (32 mm) diam polyethylene backer rod compressed and firmly packed into the 1 in. (25 mm) gap between the top of the wallboard and lower surface of the floor assembly. Backer rod to be flush with both surfaces of wall.

C. **Fill Void or Cavity Material* – Sealant** – Min 1/16 in. (1.6 mm) dry thickness (min 1/8 in. or 3.2 mm wet thickness) of fill material sprayed or brushed over joint, completely covering backer rod and overlapping min 1 in. (25 mm) onto wallboard and concrete floor.
    GRABBER CONSTRUCTION PRODUCTS INC – GrabberGard EFS

* Bearing UL Classification Marking

System No. HW-D-0547

Assembly Rating – 1 & 2 Hr (See Item 2)
Nominal Joint Width – 1in.
L Rating at Ambient – Less than 1 CFM/Lin Ft.
L Rating at 400°F – Less than 1 CFM/Lin Ft.
Class II Movement Capabilities – 12.5% Compression or Extension

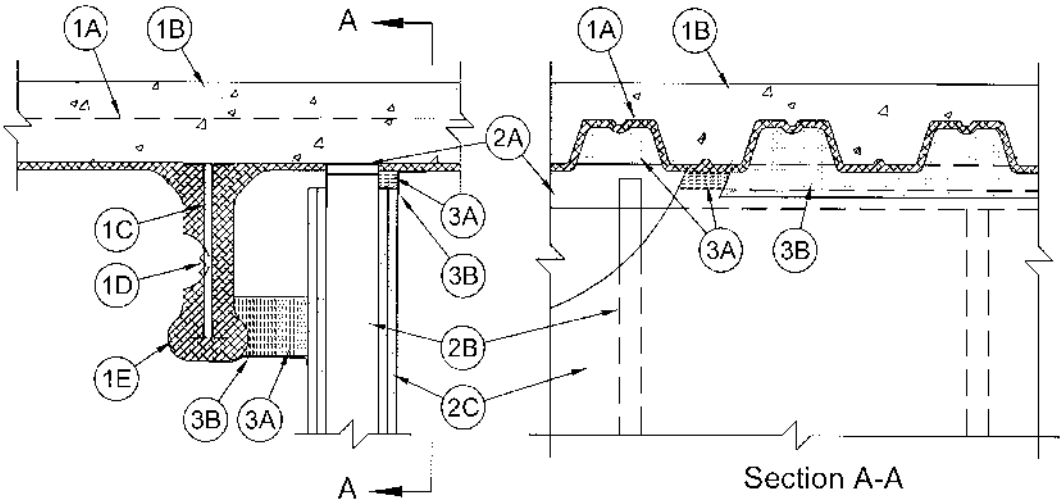

1. **Floor Assembly** – The fire-rated fluted steel deck/concrete floor assembly shall be constructed of the materials and in the manner described in the individual D700 or D900 Series Floor-Ceiling Design in the UL Fire Resistance Directory. The hourly fire rating of the floor assembly shall be equal to or greater than the hourly fire rating of the wall assembly. The floor assembly shall include the following construction features:

   A. Steel Floor and Floor Units* – Max 3 in. (76 mm) deep galv steel fluted floor units.

   B. Concrete – Min 2-1/2 in. (64 mm) thick reinforced concrete, as measured from the top plane of the floor units.

   C. Structural Steel Support – Steel beam or open-web steel joist, as specified in the individual D700 or D900 Series Floor-Ceiling Design, used to support steel floor units. Structural steel support oriented parallel to and 1 to 6 in. (25 to 152 mm) from wall assembly.

   D. Steel Lath – When structural steel support (Item 1C) consists of open-web steel joists, 3/8 in. (10 mm) diamond mesh expanded steel lath having a nom weight of 1.7 to 3.4 lb per sq yd (0.9 to 1.8 kg/m2) shall be installed to completely cover one side of each joist which is located within 6 in. (152 mm) of wall assembly. The lath shall be secured with steel tie wire and shall be fully covered with spray applied fire resistive material.

   E. Spray-Applied Fire Resistive Material* – After installation of the ceiling runner (Item 2A), steel floor units and structural steel supports to be sprayed with the thickness of material specified in the individual D700 Series Design or the structural steel supports to be sprayed in accordance with the specifications in the individual D900 Series Design. The flutes of the steel floor units above the structural steel supports and above the ceiling runner (Item 2A) shall be filled with spray-applied fire resistive material. As an alternate, the spray-applied fire resistive material in the flutes above the ceiling runner may be applied to follow the contour of the steel floor units. Excess material shall be removed from the flanges of the ceiling runner beyond the required thickness of spray-applied fire resistive material on the steel floor units.

W R GRACE & CO - CONN – Type MK-6/HY, MK-6/HY ES, MK-6s, RG
ISOLATEK INTERNATIONAL – Type 300

1A. **Roof Assembly** – (Not Shown) – As an alternate to the floor assembly (Item 1), a fire rated fluted steel deck roof assembly may be used. The roof assembly shall be constructed of the materials and in the manner described in the individual P700 Series Roof-Ceiling Design in the UL Fire Resistance Directory. The hourly fire rating of the roof assembly shall be equal to or greater than the hourly fire rating of the wall assembly. The roof assembly shall include the following construction features:

A. Steel Roof Deck – Max 3 in. (76 mm) deep galv steel fluted roof deck.

B. Roof Insulation – Mineral and Fiber Board* — Min 3/4 in. (19 mm) thick boards applied in one or more layers directly over steel roof deck or over gypsum board sheathing laid atop steel roof deck.

C. Roof Covering* – Hot-mopped or cold-application materials compatible with mineral and fiber board insulation.

D. Structural Steel Support – Steel beam or open-web steel joist, as specified in the individual P700 or P800 Series Roof-Ceiling Design, used to support steel floor units. Structural steel support oriented parallel to and 1 in. to 6 in. (25 to 152 mm) from wall assembly.

E. Steel Lath – When structural steel support (Item 1D) consists of open-web steel joists, 3/8 in. (10 mm) diamond mesh expanded steel lath having a nom weight of 1.7 to 3.4 lb per sq yd (0.9 to 1.8 kg/m2) shall be installed to completely cover one side of each joist which is located within 6 in. (152 mm) of wall assembly. The lath shall be secured with steel tie wire and shall be fully covered with spray applied fire resistive material.

F. Spray-Applied Fire Resistive Material* – After installation of the ceiling runner (Item 2A), steel roof deck and structural steel supports to be sprayed with a thickness of spray applied fire resistive material as specified in the individual P700 Series Roof-Ceiling design. The flutes of the steel deck above the structural steel supports and above the ceiling runner (Item 2A) shall be filled with spray-applied fire resistive material. As an alternate, the spray-applied fire resistive material in the flutes above the ceiling runner may be applied to follow the contour of the steel roof deck. Excess material shall be removed from the flanges of the ceiling runner beyond the required thickness of spray-applied fire resistive material on the steel roof deck.

W R GRACE & CO - CONN – Type MK-6/HY, MK-6/HY ES, MK-6s, RG
ISOLATEK INTERNATIONAL – Type 300

2. **Wall Assembly** – The 1 or 2 hr fire-rated gypsum board/steel stud wall assembly shall be constructed of the materials and in the manner described in the individual U400 or V400 Series Wall or Partition Design in the UL Fire Resistance Directory and shall include the following construction features:

A. Steel Floor and Ceiling Runners – Floor and ceiling runners of wall assembly shall consist of galv steel channels sized to accommodate steel studs (Item 2B). Ceiling runner to be provided with min 2 in. (51 mm) to max 3 in. (76 mm) flanges. Ceiling runner is secured to steel floor units (Item 1A) with steel fasteners or welds spaced max 24 in. (610 mm) OC. Ceiling runner to be installed parallel with structural steel support and located such that a max clearance of 4 in. (102 mm) is present between the finished wall and the spray-applied fire resistive material at the lowest elevation of the structural steel support.

A1. Light Gauge Framing* – Slotted Ceiling Runner – As an alternate to the ceiling runner in Item 2A, ceiling runner to consist of galv steel channel with slotted flanges sized to accommodate steel studs (Item 2B). Ceiling runner secured to valleys with steel fasteners spaced max 24 in. (610 mm) OC.

CALIFORNIA EXPANDED METAL PRODUCTS COMPANY – CST
BRADY CONSTRUCTION INNOVATIONS INC, DBA SLIPTRACK SYSTEMS – SLP-TRK

A2. Light Gauge Framing* – Clipped Ceiling Runner – As an alternate to the ceiling runner in Items 2A and 2A1, clipped runner to consist of galv steel channel with clips preformed in track flanges which positively engage the inside flange of the steel studs (Item 2B). Track sized to accommodate steel studs (Item 2B). Track flanges to be min 2-1/2 in. (64 mm). Clipped ceiling runner secured with steel fasteners spaced max 24 in. (610 mm) OC.

TOTAL STEEL SOLUTIONS L L C – Snap Trak

A3. Light Gauge Framing* – Notched Ceiling Runner – As an alternate to the ceiling runners in Items 2A through 2A2, notched ceiling runners to consist of C-shaped galv steel channel with notched return flanges sized to accommodate steel studs (Item 2B). Notched ceiling runner installed perpendicular to direction of fluted steel deck and secured to valleys with steel masonry anchors spaced max 24 in. (610 mm) OC.

OLMAR SUPPLY INC – Type SCR

HW-D-0547

A. **Studs** – Steel studs to be min 3-1/2 in. (89 mm) wide. Studs cut 1/2 in. to 3/4 in. (13 to 19 mm) less in length than assembly height with bottom nesting in and secured to floor runner. When slotted ceiling runner (Item 2A1) is used, steel studs secured to slotted ceiling runner with No. 8 by 1/2 (13 mm) long wafer head steel screws at midheight of slot on each side of wall. Studs to nest in ceiling runner without attachment.

B. **Gypsum Board*** – Gypsum board sheets installed to a min total 5/8 in. (16 mm) or 1-1/4 in. (32 mm) thickness on each side of wall for 1 and 2 hr fire rated assemblies, respectively. Wall to be constructed as specified in the individual U400 or V400 Series Design in the UL Fire Resistance Directory except that a max 1 in. (25 mm) gap shall be maintained between the top of the gypsum board and the bottom plane of the spray applied fire resistive material on the steel deck when D700 series assembly is used or between the top of gypsum board and the steel floor units when D900 series assembly is used, on both sides of the wall assembly. The screws attaching the gypsum board to the studs along the top of the wall shall be located 1 in. (25 mm) below the bottom of the ceiling runner. No gypsum board attachment screws shall be driven into the ceiling runner. Where the top of the wall assembly is inaccessible above the lowest elevation of the structural steel support, the gypsum board attachment screws may be omitted.

The hourly fire rating of the joint system is equal to the hourly fire rating of the wall.

1. **Joint System** – Max separation between bottom of the spray applied fire resistive material on the steel floor units and top of gypsum board (at time of installation of joint system) is 1 in. (25 mm) when D700 series assembly is used. Max separation between bottom of the steel floor units and top of gypsum board (at time of installation of joint system) is 1 in. (25 mm) when D900 series assembly is used. Max separation between spray applied fire resistive material on structural support member and surface of wall is 4 in. (102 mm). The joint system is designed to accommodate a max 12.5 percent compression or extension from its installed width as measured between the bottom plane of the steel floor units or spray-applied fire resistive material on the steel floor units and the top of the gypsum board. The joint system shall consist of forming and fill materials, as follows:

A. **Forming Material*** – Nom 4 pcf (64 kg/m3) density mineral wool batt insulation. Sections of mineral wool batt cut to a width of 4 in. (102 mm) and stacked to attain a thickness which is 50 percent greater than the width of the linear gap between the spray applied fire resistive material on the structural steel member and the surface of the wall assembly. Stacked sections of mineral wool compressed 33 percent in thickness and installed cut edge first into linear gap until the bottom edge is flush with the bottom surface of the spray applied fire resistive material on the structural steel member. When the spray-applied fire resistive material in the flutes above the wall follows the contour of the steel deck, sections of mineral wool batt cut to the shape of the fluted deck and stacked to a min 6 in. (152 mm) thickness shall be installed in the flutes of the steel floor or roof deck between the top of the ceiling runner and the spray-applied fire resistive material. The mineral wool batt insulation is to be installed flush with the gypsum board surface on the side of the wall opposite the structural steel support. Additional sections of mineral wool batt insulation are compressed 50 percent in thickness and are installed cut edge first to completely fill the gap above the top of the gypsum board.

FIBREX INSULATIONS INC – FBX Safing Insulation
IIG MINWOOL L L C – MinWool-1200 Safing
ROCK WOOL MANUFACTURING CO – Delta Board
ROXUL ASIA SDN BHD – SAFE
ROXUL INC – SAFE
THERMAFIBER INC – Type SAF

B. **Fill, Void or Cavity Material* – Sealant** – Min 1/8 in. (3.2 mm) wet thickness or 1/16 in. (1.6 mm) dry thickness of fill material spray or brush applied over the forming material on each side of the wall. Fill material to overlap a min of 1 in. (25 mm) onto the gypsum board and onto the steel floor units or spray-applied fire resistive material on the steel floor units and on the structural steel support member.

GRABBER CONSTRUCTION PRODUCTS INC – GrabberGard EFS

***Bearing the UL Classification Marking**

System No. HW-D-0566

Assembly Rating – 2 Hr
Nominal Joint Width – 2 in.
Class II Movement Capabilities – 12.5% Compression or Extension

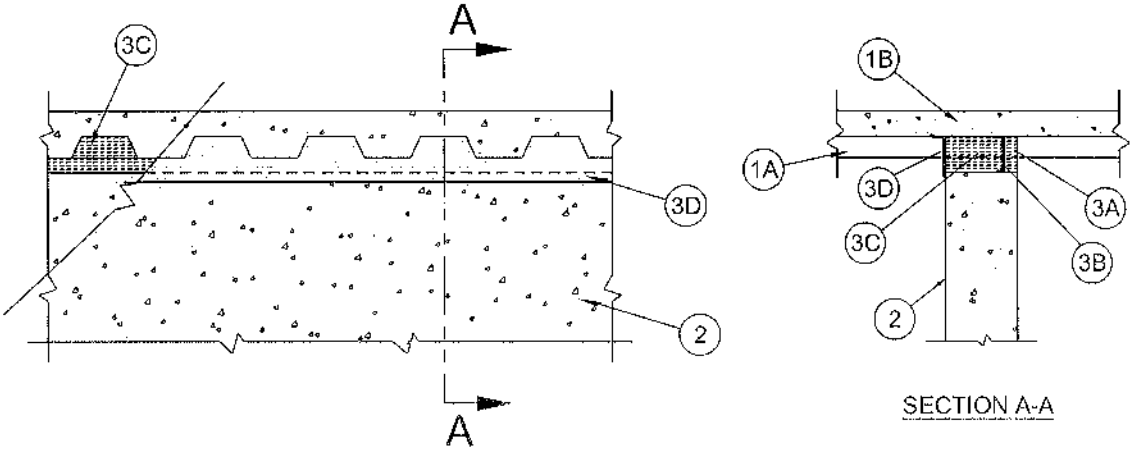

1. **Floor Assembly** – The fire-rated fluted steel deck/concrete floor assembly shall be constructed of the materials and in the manner described in the individual D900 Series Floor-Ceiling Design in the UL Fire Resistance Directory. The hourly fire rating of the floor assembly shall be equal to or greater than the hourly fire rating of the wall assembly. The floor assembly shall include the following construction features:

   A. Steel Floor and Floor Units* – Max 3 in. (76 mm) deep galv steel fluted floor units.
   B. Concrete – Min 2-1/2 in. (64 mm) thick reinforced concrete, as measured from the top plane of the floor units.

1A. **Roof Assembly** – (Not Shown) – As an alternate to the floor assembly (Item 1), a fire rated fluted steel deck roof assembly may be used. The roof assembly shall be constructed of the materials and in the manner described in the individual P900 Series Roof-Ceiling Design in the UL Fire Resistance Directory. The hourly fire rating of the roof assembly shall be equal to or greater than the hourly fire rating of the wall assembly. The roof assembly shall include the following construction features:

   A. Steel Roof Deck – Max 3 in. (76 mm) deep galv steel fluted roof deck.
   B. Roof Insulation – Min 2-1/4 in. (57 mm) thick poured insulating concrete, as measured from the top plane of the steel roof deck.
   C. Roof Covering* – Hot-mopped or cold-application materials compatible with insulating concrete.

2. **Wall Assembly** – Min 8 in. (203 mm) thick reinforced lightweight or normal weight (100-150 pcf or 1600-2400 kg/m3) structural concrete. Wall shall be installed perpendicular with flutes of the steel floor and form units (Item 1A). Wall may also be constructed of any UL Classified 2 hr fire rated Concrete Blocks*. When wall is constructed of concrete blocks, the top course of block shall be filled with concrete, grout or mortar.
   See **Concrete Blocks** (CAZT) category in the Fire Resistance Directory for names manufacturers.

HW-D-0566

1. **Joint System** – Max separation between bottom of steel floor or roof units and top of wall (at time of installation of joint system) is 2 in. (51 mm). The joint system is designed to accommodate a max 12.5 percent compression or extension from its installed width as measured between the bottom plane of the steel floor units and the top of the wall. The joint system shall consist of forming and fill materials, as follows:

   A. **Forming Material*** – Min 2 in. (51 mm) wide sections of min 4 pcf (64 kg/m3) density mineral wool batt insulation cut to shape of flutes, compressed 33 percent in thickness and tightly packed into fluted area of floor or roof deck as a permanent form, flush with one surface of wall. Additional strips of mineral wool batt insulation cut to min 2 in. (51 mm) width, compressed 33 percent in thickness and inserted into the gap between the top of the wall and the bottom of the floor units as a permanent form, flush with one surface of the wall. Adjoining lengths of batt insulation to be tightly butted with seams spaced min 48 in. (1.2 m) apart along length of joint.

   FIBREX INSULATIONS INC – FBX Safing Insulation
   IIG MINWOOL L L C – MinWool-1200 Safing
   ROCK WOOL MANUFACTURING CO – Delta Board
   ROXUL ASIA SDN BHD – SAFE
   ROXUL INC – SAFE
   THERMAFIBER INC – Type SAF

   B. **Fill, Void or Cavity Material* – Sealant** – Min 1/8 in. (3.2 mm) wet thickness or 1/16 in. (1.6 mm) dry thickness of fill material spray or brush applied into joint to completely cover the mineral wool forming material and to overlap a min of 1 in. (25 mm) onto the steel deck and min 1/2 in. (13 mm) onto the top of concrete wall.

   GRABBER CONSTRUCTION PRODUCTS INC – GrabberGard EFS

   C. **Forming Material*** – Min 6 in. (152 mm) wide sections of min 4 pcf (64 kg/m3) density mineral wool batt insulation cut to shape of flutes, compressed 33 percent in thickness and tightly packed into fluted area of floor or roof deck as a permanent form, flush with the installed forming material (Item 3A) and opposite surface of wall. Additional strips of mineral wool batt insulation cut to min 6 in. (152 mm) width, compressed 33 percent in thickness and inserted into the gap between the top of the wall and the bottom of the floor units as a permanent form, flush with the installed forming material (Item 3A) and the opposite surface of the wall. Adjoining lengths of batt insulation to be tightly butted with seams spaced min 48 in. (1.2 m) apart along length of joint.

   FIBREX INSULATIONS INC – FBX Safing Insulation
   IIG MINWOOL L L C – MinWool-1200 Safing
   ROCK WOOL MANUFACTURING CO – Delta Board
   ROXUL ASIA SDN BHD – SAFE
   ROXUL INC – SAFE
   THERMAFIBER INC – Type SAF

   D. **Fill, Void or Cavity Material* – Sealant** – Min 1/8 in. (3.2 mm) wet thickness or 1/16 in. (1.6 mm) dry thickness of fill material spray or brush applied to completely cover the mineral wool forming material and to overlap a min of 1/2 in. (13 mm) onto concrete wall and min 1 in. (25 mm) onto steel deck on accessible side of the wall.

   GRABBER CONSTRUCTION PRODUCTS INC – GrabberGard EFS

***Bearing the UL Classification Marking**

System No. HW-D-0567

Assembly Rating – 2 Hr
Nominal Joint Width – 2 in.
Class II Movement Capabilities – 12.5% Compression or Extension

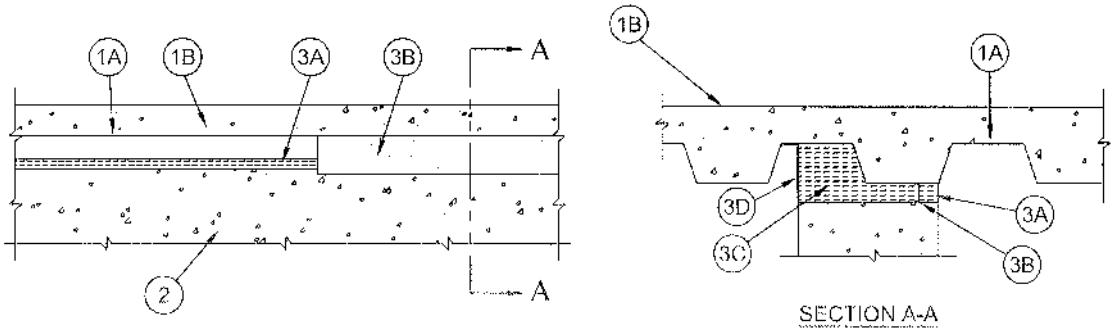

1. **Floor Assembly** – The fire-rated fluted steel deck/concrete floor assembly shall be constructed of the materials and in the manner described in the individual D900 Series Floor-Ceiling Design in the UL Fire Resistance Directory and shall include the following construction features:

   A. Steel Floor and Floor Units* – Max 3 in. (76 mm) deep galv steel fluted floor units.
   B. Concrete – Min 2-1/2 in. (64 mm) thick reinforced concrete, as measured from the top plane of the floor units.

1A. **Roof Assembly** – (Not Shown) – As an alternate to the floor assembly (Item 1), a fire rated fluted steel deck roof assembly may be used. The roof assembly shall be constructed of the materials and in the manner described in the individual P900 Series Roof-Ceiling Design in the UL Fire Resistance Directory. The hourly fire rating of the roof assembly shall be equal to or greater than the hourly fire rating of the wall assembly. The roof assembly shall include the following construction features:

   C. Steel Roof Deck – Max 3 in. (76 mm) deep galv steel fluted roof deck.
   D. Roof Insulation – Min 2-1/4 in. (57 mm) thick poured insulating concrete, as measured from the top plane of the steel roof deck.
   E. Roof Covering* – Hot-mopped or cold-application materials compatible with insulating concrete.

2. **Wall Assembly** – Min 8 in. (203 mm) thick reinforced lightweight or normal weight (100-150 pcf or 1600-2400 kg/m3) structural concrete. Wall shall be installed parallel with flutes of the steel floor and form units (Item 1A). Wall may also be constructed of any UL Classified 2 hr fire rated Concrete Blocks*. When wall is constructed of concrete blocks, the top course of block shall be filled with concrete, grout or mortar.
   See Concrete Blocks (CAZT) category in the Fire Resistance Directory for names manufacturers.

HW-D-0567

1. **Joint System** – Max separation between bottom of steel floor or roof units and top of wall (at time of installation of joint system) is 2 in. (51 mm). The joint system is designed to accommodate a max 12.5 percent compression or extension from its installed width. The joint system shall consist of forming and fill materials, as follows:

   A. Forming Material* – Strips of min 4 pcf (64 kg/m3) mineral wool batt insulation cut to min 2 in. (51 mm) width, compressed 50 percent in thickness and inserted into the gap between the top of the wall and the bottom of the floor units as a permanent form, flush with one surface of the wall. Adjoining lengths of batt insulation to be tightly butted with seams spaced min 48 in. (1.2 m) apart along length of joint.

   FIBREX INSULATIONS INC – FBX Safing Insulation
   IIG MINWOOL L L C – MinWool-1200 Safing
   ROCK WOOL MANUFACTURING CO – Delta Board
   ROXUL ASIA SDN BHD – SAFE
   ROXUL INC – SAFE
   THERMAFIBER INC – Type SAF

   B. Fill, Void or Cavity Material* – Sealant – Min 1/8 in. (3.2 mm) wet thickness or 1/16 in. (1.6 mm) dry thickness of fill material spray or brush applied into joint to completely cover the mineral wool forming material and to overlap a min of 1 in. (25 mm) onto the steel deck and min 1/2 in. (13 mm) onto the top of concrete wall.

   GRABBER CONSTRUCTION PRODUCTS INC – GrabberGard EFS

   C. Forming Material* – Strips of min 4 pcf (64 kg/m3) density mineral wool batt insulation cut to min 6 in. (152 mm) width, compressed 50 percent in thickness and inserted into the gap between the top of the wall and the bottom of the floor or roof units flush with the installed forming material (Item 3A) and opposite surface of wall. When the void beneath the steel deck is located entirely above the wall, the void shall be completely filled with mineral wool insulation compressed 50 percent in thickness. When void beneath the steel deck is located in part above the wall, the portion of the void above the wall shall be packed with additional strips of mineral wool batt insulation compressed 50 percent in thickness flush with the surface of the wall. Adjoining lengths of batt insulation to be tightly butted with seams spaced min 48 in. (1.2 m) apart along length of joint.

   FIBREX INSULATIONS INC – FBX Safing Insulation
   IIG MINWOOL L L C – MinWool-1200 Safing
   ROCK WOOL MANUFACTURING CO – Delta Board
   ROXUL ASIA SDN BHD – SAFE
   ROXUL INC – SAFE
   THERMAFIBER INC – Type SAF

   D. Fill, Void or Cavity Material* – Sealant – Min 1/8 in. (3.2 mm) wet thickness or 1/16 in. (1.6 mm) dry thickness of fill material spray or brush applied to completely cover the mineral wool forming material and to overlap a min of 1/2 in. (13 mm) onto concrete wall and min 1 in. (25 mm) onto steel deck on accessible side of the wall.

   GRABBER CONSTRUCTION PRODUCTS INC – GrabberGard EFS

***Bearing the UL Classification Marking**

System No. HW-D-0568

Assembly Rating – 2 Hr
Nominal Joint Width – 1 in.
L Rating at Ambient – Less than 1 CFM/Lin Ft.
L Rating at 400°F – Less than 1 CFM/Lin Ft.
Class II Movement Capabilities – 12.5% Compression or Extension

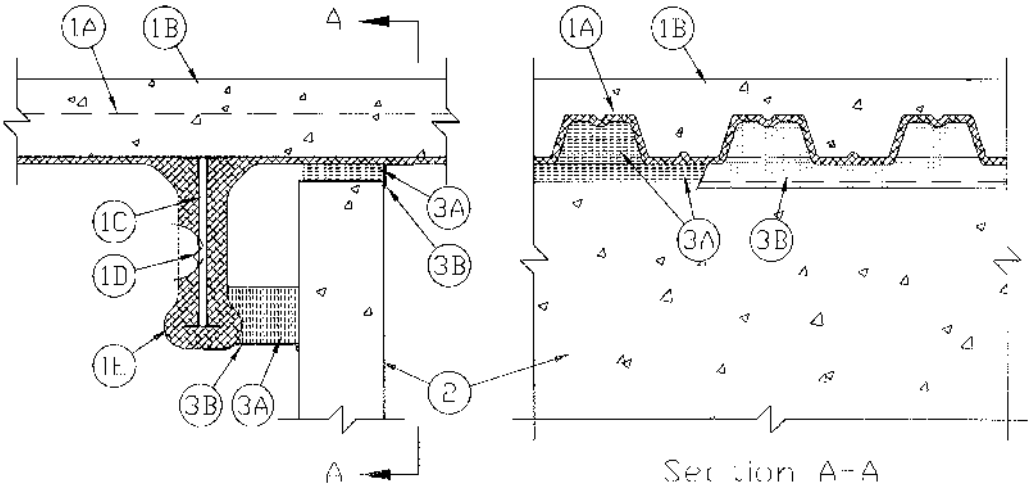

1. **Floor Assembly** – The fire-rated fluted steel deck/concrete floor assembly shall be constructed of the materials and in the manner described in the individual D700 or D900 Series Floor-Ceiling Design in the UL Fire Resistance Directory. The hourly fire rating of the floor assembly shall be equal to or greater than the hourly fire rating of the wall assembly. The floor assembly shall include the following construction features:
   - **A. Steel Floor and Floor Units*** – Max 3 in. (76 mm) deep galv steel fluted floor units.
   - **B. Concrete** – Min 2-1/2 in. (64 mm) thick reinforced concrete, as measured from the top plane of the floor units.
   - **C. Structural Steel Support** – Steel beam or open-web steel joist, as specified in the individual D700 or D900 Series Floor-Ceiling Design, used to support steel floor units. Structural steel support oriented parallel to and 1 to 6 in. (25 to 152 mm) from wall assembly.
   - **D. Steel Lath** – When structural steel support (Item 1C) consists of open-web steel joists, 3/8 in. (10 mm) diamond mesh expanded steel lath having a nom weight of 1.7 to 3.4 lb per sq yd (0.9 to 1.8 kg/m2) shall be installed to completely cover one side of each joist which is located within 6 in. (152 mm) of wall assembly. The lath shall be secured with steel tie wire and shall be fully covered with spray applied fire resistive material.
   - **E. Spray-Applied Fire Resistive Material*** – Steel floor units and structural steel supports to be sprayed with the thickness of material specified in the individual D700 Series Design or the structural steel supports to be sprayed in accordance with the specifications in the individual D900 Series Design. The flutes of the steel floor units above the structural steel supports and above the wall shall be filled with spray-applied fire resistive material. As an alternate, the spray-applied fire resistive material in the flutes above the wall may be applied to follow the contour of the steel floor units.

ISOLATEK INTERNATIONAL – Type 300
W R GRACE & CO - CONN – Type MK-6/HY, MK-6/HY ES, MK-6s, RG

HW-D-0568

1A. **Roof Assembly – (Not Shown)** – As an alternate to the floor assembly (Item 1), a fire rated fluted steel deck roof assembly may be used. The roof assembly shall be constructed of the materials and in the manner described in the individual P700 or P900 Series Roof-Ceiling Design in the UL Fire Resistance Directory. The hourly fire rating of the roof assembly shall be equal to or greater than the hourly fire rating of the wall assembly. The roof assembly shall include the following construction features:

A. **Steel Roof Deck** – Max 3 in. (76 mm) deep galv steel fluted roof deck.

B. **Roof Insulation – Mineral and Fiber Board*** — Min 3/4 in. (19 mm) thick boards applied in one or more layers directly over steel roof deck or over gypsum board sheathing laid atop steel roof deck.

C. **Roof Covering*** – Hot-mopped or cold-application materials compatible with mineral and fiber board insulation.

D. **Structural Steel Support** – Steel beam or open-web steel joist, as specified in the individual P700 or P800 Series Roof-Ceiling Design, used to support steel floor units. Structural steel support oriented parallel to and 1 in. to 6 in. (25 to 152 mm) from wall assembly.

E. **Steel Lath** – When structural steel support (Item 1D) consists of open-web steel joists, 3/8 in. (10 mm) diamond mesh expanded steel lath having a nom weight of 1.7 to 3.4 lb per sq yd (0.9 to 1.8 kg/m2) shall be installed to completely cover one side of each joist which is located within 6 in. (152 mm) of wall assembly. The lath shall be secured with steel tie wire and shall be fully covered with spray applied fire resistive material.

F.**Spray-Applied Fire Resistive Material*** – Steel roof deck and structural steel supports to be sprayed with a thickness of spray applied fire resistive material as specified in the individual P700 Series Roof-Ceiling design or the structural steel supports to be sprayed in accordance with the specifications in the individual D900 Series Design. The flutes of the steel deck above the structural steel supports and above the wall shall be filled with spray-applied fire resistive material. As an alternate, the spray-applied fire resistive material in the flutes above the wall may be applied to follow the contour of the steel roof deck.

ISOLATEK INTERNATIONAL – Type 300
W R GRACE & CO - CONN – Type MK-6/HY, MK-6/HY ES, MK-6s, RG

2. **Wall Assembly** – Min 6 in. (152 mm) thick reinforced lightweight or normal weight (100-150 pcf of 1600-2400 kg/m3) concrete. Wall may also be constructed of any UL Classified Concrete Blocks*.
See Concrete Blocks (CAZT) category in the Fire Resistance Directory for names of manufactures.

1. **Joint System** – Max separation between bottom of the spray applied fire resistive material on the steel floor units and top of concrete wall (at time of installation of joint system) is 1 in. (25 mm) when D700 or P700 series assembly is used. Max separation between bottom of the steel floor units and top of gypsum board (at time of installation of joint system) is 1 in. (25 mm) when D900 or P900 series assembly is used. Max separation between spray applied fire resistive material on structural support member and surface of wall is 4 in. (102 mm). The joint system is designed to accommodate a max 12.5 percent compression or extension from its installed width as measured between the bottom plane of the steel floor units or spray-applied fire resistive material on the steel floor units and the top of the concrete wall. The joint system shall consist of forming and fill materials, as follows:

   A. **Forming Material*** – Nom 4 pcf (64 kg/m3) density mineral wool batt insulation. Sections of mineral wool batt cut to a width of 4 in. (102 mm) and stacked to attain a thickness which is 50 percent greater than the width of the linear gap between the spray applied fire resistive material on the structural steel member and the surface of the wall assembly. Stacked sections of mineral wool compressed 33 percent in thickness and installed cut edge first into linear gap until the bottom edge is flush with the bottom surface of the spray applied fire resistive material on the structural steel member. When the spray-applied fire resistive material in the flutes above the wall follows the contour of the steel deck or when the steel deck is unprotected (D900 or P900 series assembly), sections of mineral wool batt insulation are compressed 50 percent in thickness and are installed cut edge first to completely fill the flutes above the wall flush with the wall surface opposite the structural support member. Additional sections of mineral wool batt insulation cut to the width of the wall and inserted edge-first between the top of the wall and the steel deck or the applied fire resistive material on the steel deck, compressed 50 percent in thickness beneath each valley and flush with the wall surface.

   FIBREX INSULATIONS INC – FBX Safing Insulation
   IIG MINWOOL L L C – MinWool-1200 Safing
   ROCK WOOL MANUFACTURING CO – Delta Board
   ROXUL ASIA SDN BHD – SAFE
   ROXUL INC – SAFE
   THERMAFIBER INC – Type SAF

   B. **Fill, Void or Cavity Material* – Sealant** – Min 1/8 in. (3.2 mm) wet thickness or 1/16 in. (1.6 mm) dry thickness of fill material spray or brush applied over the forming material on each side of the wall. Fill material to overlap a min of 1 in. (25 mm) onto the concrete wall and onto the steel floor units or spray-applied fire resistive material on the steel floor units and on the structural steel support member.

   GRABBER CONSTRUCTION PRODUCTS INC – GrabberGard EFS

***Bearing the UL Classification Marking**

System No. HW-D-0692

ANSI/UL 2079	CAN/ULC S115
Assembly Rating – 2 Hr	F Rating – 2 hr
Nominal Joint Width – 1 in.	FT Rating – 2 Hr
Class II Movement Capabilities – 25% Compression or Extension	FH Rating – 2 Hr
	FTH Rating – 2 Hr
	Nomimal Joint Width – 25 mm
	Class II Movement Capabilities – 25% Compression or Extension

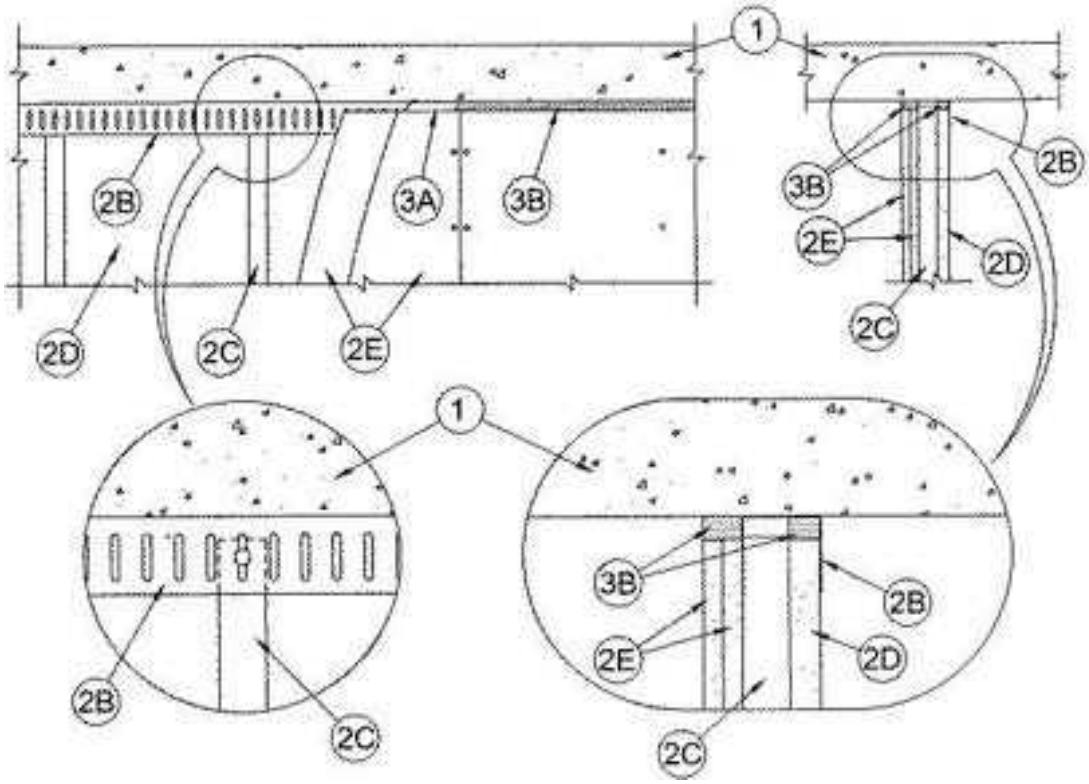

1. **Floor Assembly** – Min 4-1/2 in. (114 mm) thick steel-reinforced lightweight or normal weight (100-150 pcf or 1600-2400 kg/m3) structural concrete.

2. **Shaft Wall Assembly** – With the exception of the ceiling runner, the 2 hr fire rated shaft wall assembly shall be constructed of the materials and in the manner described in System B of Design No. U415 in the UL Fire Resistance Directory. The wall shall include the following construction features:

   A. **Floor and Wall Runners – (Not Shown)** – "J"-shaped runner, min 2-1/2 in. (64 mm) wide with unequal legs of 1 in. (25 mm) and 2 in. (51 mm), fabricated from min 24 MSG galv steel. Runners positioned with short leg toward finished side of wall. Runners attached to walls and floor with steel fasteners spaced max 24 in. (610 mm) OC. As an alternate to the "J"-shaped runner, a min 2-1/2 in. (64 mm) wide by 1 or 1-1/4 in. (25 or 32 mm) deep channel formed from min 24 MSG galv steel may be used for the floor runner.

   B. **Light Gauge Framing*** – Slotted Ceiling Track – Slotted ceiling track shall consist of galv steel channels with slotted flanges. Slotted ceiling track sized to accommodate steel "C-H" studs (Items 2C). Attached to concrete at ceiling with steel fasteners spaced max 12 in. (305 mm) OC.

BRADY CONSTRUCTION INNOVATIONS INC, DBA SLIPTRACK SYSTEMS, INC – SLP-TRK

A. **Steel Studs** – "C-H"-shaped steel studs to be min 2-1/2 in. (64 mm) wide and formed of min 24 MSG galv steel. As an alternate, nom 6 in. (152 mm) wide "E"-shaped steel studs installed back-to-back and secured together with steel screws spaced max 12 in. (305 mm) OC may be used. "E"-shaped studs to be formed of min 24 MSG galv steel. Studs cut 1/2 to 3/4 in. (13 to 19 mm) less in length than assembly height with bottom nesting in and resting on floor runner and with top nesting in slotted ceiling track. Studs spaced 24 in. (610 mm) OC. After installation of gypsum board liner panels (Item 2D), studs secured to flange of floor runner on finished side of wall only with No. 6 by 1/2 in. (13 mm) long self-drilling, self-tapping steel screws. Studs secured to flange of slotted ceiling track on finished side of wall only with No. 8 by 1/2 in. (13 mm) long self-drilling, self-tapping wafer head steel screws at slot midheight.

B. **Gypsum Board*** – 1 in. (25 mm) thick by 24 in. (610 mm) wide gypsum board liner panels as specified in Design No. U415. Panels cut 1 in. (25 mm) less in length than floor to ceiling height. Vertical edges inserted in "H"-shaped section of "C-H" studs. Free edge of end panels attached to long leg of "J" runner (Item 2A) with 1-5/8 in. (41 mm) long Type S steel screws spaced max 12 in. (305 mm) OC.

C. **Gypsum Board*** – Gypsum board sheets, 1/2 or 5/8 in. (13 or 15 mm) thick, applied vertically or horizontally in two layers on finished side of wall as specified in System B of Design No. U415. A max 1 in. (25 mm) gap shall be maintained between the top of the gypsum board and the bottom surface of the concrete floor. The screws attaching the gypsum board layers to the C-H studs shall be located 1 in. (25 mm) below the bottom of the slotted ceiling track (Item 2C). No gypsum board attachment screws are to penetrate the slotted ceiling track.

1. **Joint System** – Max separation between bottom of floor and top of liner panel (Item 2D) and between bottom of floor and top of gypsum board sheets (Item 2E) at time of installation of joint system is 1 in. (25 mm). The joint system is designed to accommodate a maximum 25 percent compression or extension from its installed width. The joint system consists of bond breaker tape and sealant, as follows:

A. **Bond Breaker Tape** – Polyethylene tape supplied in rolls. Tape applied to flanges of slotted ceiling track (Item 2D) to prevent bonding of the sealant at points other than the top and bottom of the linear gap.

B. **Fill, Void or Cavity Material* – Sealant** – Min 1 in. (25 mm) depth of sealant to be installed to fill linear gap between top of gypsum board liner panel (Item 2D) and top inside surface of slotted ceiling track (Item 2B) prior to installation of gypsum board sheets on finished side of wall. Min 1 in. (25 mm) depth of sealant to be installed to fill linear gap between top of gypsum board sheets (Item 2E) and bottom of concrete floor.

GRABBER CONSTRUCTION PRODUCTS INC – GrabberGard IFC Sealant or GrabberGard EFC Sealant

***Bearing the UL Classification Marking**

System No. HW-D-0694

ANSI/UL 2079	CAN/ULC S115
Assembly Rating – 2 Hr	F Rating – 2 hr
Nominal Joint Width – 3/4 in.	FT Rating – 2 Hr
Class II or III Movement Capabilities – 25% Compression or Extension	FH Rating – 2 Hr
	FTH Rating – 2 Hr
	Nomimal Joint Width – 19 mm
	Class II or III Movement Capabilities – 25% Compression or Extension

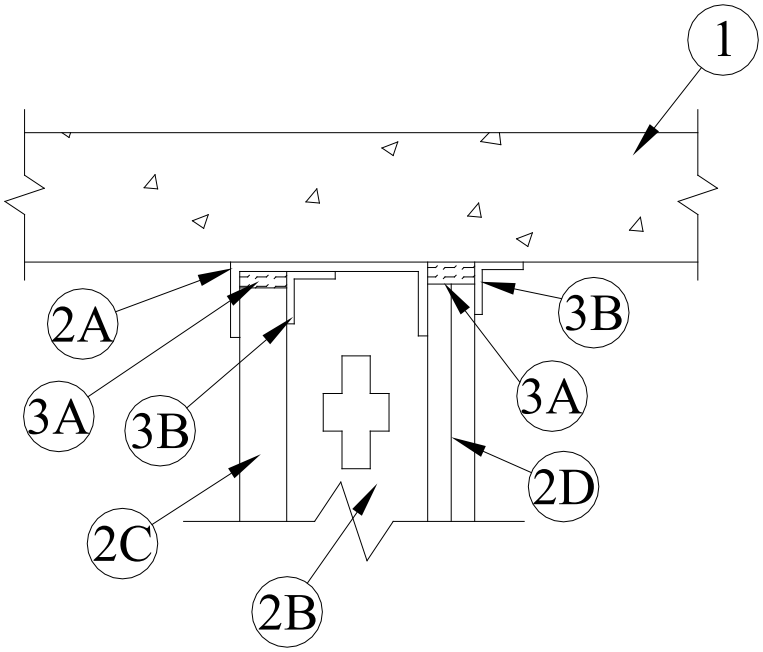

1. **Floor Assembly** – Min 4-1/2 in. (114 mm) thick reinforced lightweight or normal weight (100-150 pcf or 1600-2400 kg/m3) structural concrete. Floor may also be constructed of any UL Classified hollow-core Precast Concrete Units*.
   See Precast Concrete Units (CFTV) in Fire Resistance Directory for names of manufacturers.

2. **Shaft Wall Assembly** – The 2 hr fire rated shaft wall assembly shall be constructed of the materials and in the manner described in the individual U400 or V400-Series Wall and Partition Design in the UL Fire Resistance Directory and shall include the following construction features:

   A. **Steel Floor and Ceiling Runners** – Floor and ceiling runners of wall assembly shall consist of galv steel channels sized to accommodate steel "C-H" studs. Flange height of ceiling runner shall be min 1/2 in. (13 mm) greater than nom joint width. Ceiling runner secured with steel masonry anchors spaced max 24 in. (610 mm) OC.

   B. **Steel Studs** – "C-H"-shaped steel studs to be min 2-1/2 in. (64 mm) wide and formed of min 24 MSG galv steel. Studs cut 1/2 to 3/4 in. (13 to 19 mm) less in length than assembly height with bottom nesting in and resting on floor runner and with top nesting in ceiling runner or slotted ceiling track. Studs spaced 24 in. (610 mm) OC. After installation of gypsum board liner panels (Item 2D), studs secured to flange of floor runner on finished side of wall only with No. 6 by 1/2 in. (13 mm) long self-drilling, self-tapping steel screws. Studs secured to flange of slotted ceiling track on finished side of wall only with No. 8 by 1/2 in. (13 mm) long self-drilling, self-tapping wafer head steel screws at slot mid height.

C. **Gypsum Board*** – 1 in. (25 mm) thick by 24 in. (610 mm) wide gypsum board liner panels. Panels cut 1 in. (25mm) less in length than floor to ceiling height. Vertical edges inserted in "H"-shaped section of "C-H" studs. Free edge of end panels attached to long leg of "J" runner (Item 2A) with 1-5/8 in. (41 mm) long Type S steel screws spaced max 12 in. (305 mm) OC.

D. **Gypsum Board*** – Gypsum board sheets, 1/2 or 5/8 in. (13 or 16 mm) thick, applied vertically or horizontally in two layers on finished side of wall as specified in the individual U400 or V400-Series Wall and Partition Design. A max 1 in. (25 mm) gap shall be maintained between the top of the gypsum board and the bottom surface of the concrete floor. The screws attaching the gypsum board layers to the C-H studs shall be located 1 in. (25 mm) below the bottom of the slotted ceiling track (Item 2C). No gypsum board attachment screws are to penetrate the slotted ceiling track.

3. **Joint System** – Max separation between bottom of floor and top of liner panel (Item 2D) and between bottom of floor and top of gypsum board sheets (Item 2E) at time of installation of joint system is 3/4 in. (19 mm). The joint system is designed to accommodate a maximum 19 percent compression or extension from its installed width. The joint system consists of the following:

A. **Forming Material*** – Min 4 pcf (64 kg/m3) density mineral wool batt insulation cut to a thickness equal to the overall thickness of the gypsum board and shaft liner and compressed 50 percent in height and inserted between the top of the gypsum board and bottom of floor on both sides of the wall.

B. **Fill, Void or Cavity Material* – Sealant** – Fill, Void or Cavity Material* – Sealant – Prior to the installation of the gypsum board (Item 2D), a min 1/16 in. (1.6 mm) dry thickness (min 1/8 in. or 3.2 mm wet thickness) of fill material sprayed or brushed on inside of ceiling runner to completely cover mineral wool and overlap a min of 1/2 in. (13 mm) onto shaft liner (Item 2C) and runner (Item 2A). After installation of gypsum board (Item 2D) min 1/16 in. (1.6 mm) dry thickness (min 1/8 in. or 3.2 mm wet thickness) of fill material sprayed or brushed on gypsum board on the wall to completely cover mineral wool and overlap a min of 1/2 in. (13 mm) onto wall and floor

GRABBER CONSTRUCTION PRODUCTS INC – GrabberGard EFS Sealant

***Bearing the UL Classification Marking**

System No. HW-D-1050

Assembly Rating – 3 Hr
Joint Width – 4 in. Max
Class II Movement Capabilities – 12.5% Compression or Extension

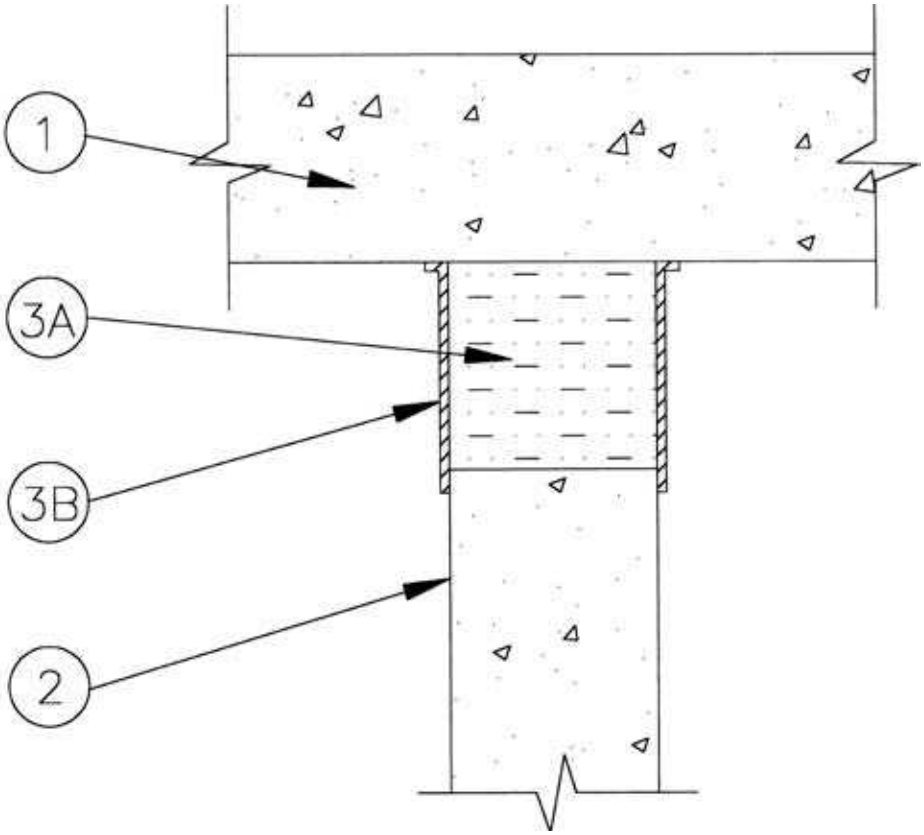

1. **Floor Assembly** – Min 4-1/2 in. thick steel-reinforced lightweight or normal weight (100-150 pcf) structural concrete.

2. **Wall Assembly** – Min 4-1/2 in. thick reinforced lightweight or normal weight (100-150 pcf) structural concrete. Wall may also be constructed of any UL Classified Concrete Blocks*.
   See Concrete Blocks (CAZT) category in the Fire Resistance Directory for names of manufacturers.

3. **Joint System** – Max width of joint (at time of installation of joint system) is 4 in. The joint system is designed to accommodate a max 12.5 percent compression or extension from its installed width. The joint system shall consist of the following:

   A. **Forming Material*** – Min 4 pcf mineral wool batt insulation installed into joint opening as a permanent form. Batt cut to min width of 4-1/2 in. and installed edge-first into joint opening, parallel with joint direction, such that batt sections are compressed min 33 percent in thickness and such that the compressed batt sections are flush with the top surface of floor.

   IIG Minwool LLC – MinWool-1200 Safing
   Rock wool Manufacturing Company – Delta Safing Board
   Thermafiber LLC – Type SAF

   B. **Fill, Void or Cavity Material* – Sealant** – Min 1/16 in. dry thickness of fill material sprayed or brushed on joint completely covering mineral wool and overlapping a min of 1/2 in. onto concrete floor and wall assembly.

   GRABBER CONSTRUCTION PRODUCTS INC – GrabberGard EFS

***Bearing the UL Classification Marking**

Underwriters Laboratories Inc.®

FL0712

System No. WW-D-0078

Assembly Rating – 2 Hr
Nominal Joint Width – 3/4 in. (19 mm)
Class II Movement Capabilities – 33% Compression and Extension

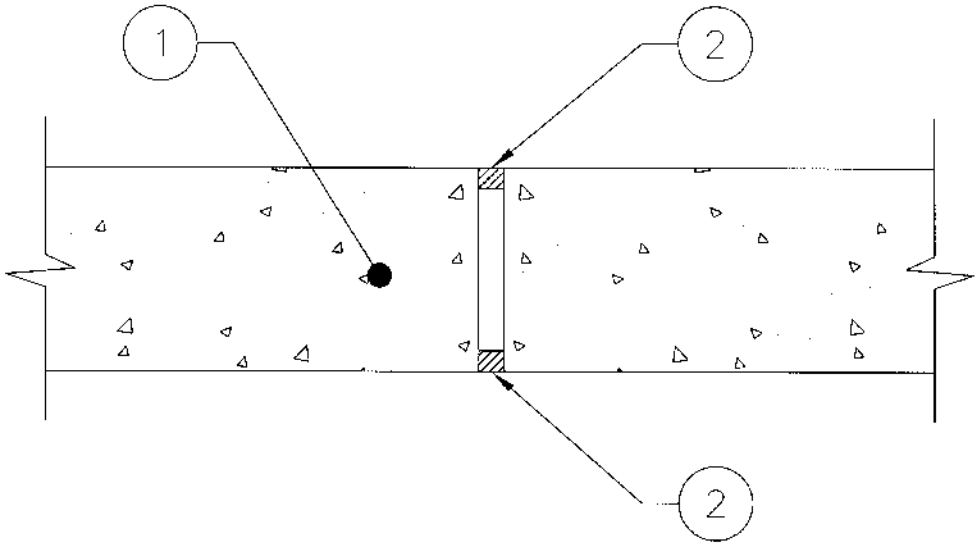

1. **Wall Assembly** – Min 4-1/2 in. (114 mm) thick steel-reinforced lightweight or normal weight (100-150 pcf or 1600-2400 kg/m^3) structural concrete. Wall may also be constructed of any UL Classified Concrete Blocks.*
   See Concrete Blocks (CATZ) category in the Fire Resistance Directory for names of manufacturers.

2. **Joint System – Fill, Void or Cavity Materials*** – Max width of joint (at time of installation) is 3/4 in. (19 mm). The joint system is designed to accommodate a max 33 percent compression or extension from its installed width. The joint system shall consist of a min 5/8 in. (16 mm) thickness of fill material applied within the joint, flush with each surface of wall.

GRABBER CONSTRUCTION PRODUCTS INC – GrabberGard IFC or GrabberGard EFC

***Bearing the UL Classification Marking**

System No. WW-S-0054

Assembly Rating – 1 and 2 Hr (See Item 1)
Nominal Joint Width – 3/4 in. (19 mm)

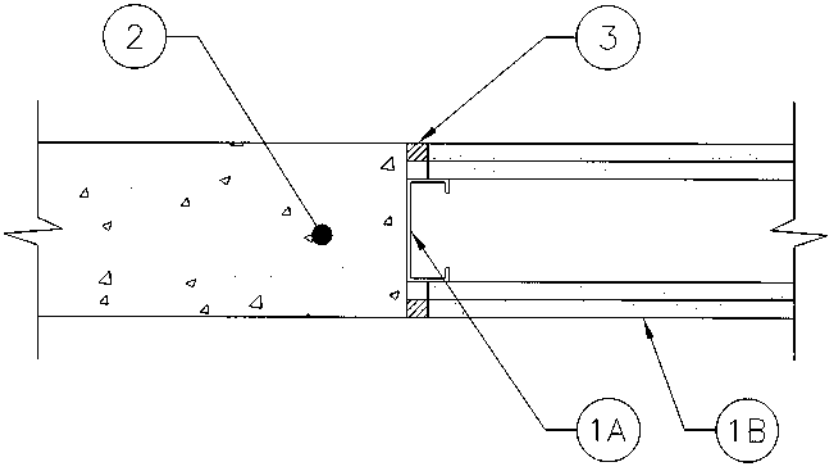

1. **Wall Assembly** – The 1 or 2 hr fire-rated gypsum board/steel stud wall assembly shall be constructed of the materials and in the manner specified in the individual U400 or V400 Series Wall or Partition Design in the UL Fire Resistance Directory and shall include the following construction features:
   - **A. Studs** – Steel studs to be min 3-1/2 in. (89 mm) wide by 1-1/4 in. (32 mm) deep corrosion protected min 25 MSG steel channels. Studs not to exceed 24 in. (610 mm) OC. Stud installed nominally centered at joint location.
   - **B. Gypsum Board*** – Gypsum board sheets installed to a min total thickness of 5/8 in. (16 mm) or 1-1/4 in. (32 mm) on each side of wall for 1 and 2 hr fire rated assemblies, respectively.
     The hourly rating of the joint system is dependent on the hourly rating of the wall assembly in which it is installed.
2. **Wall Assembly** – Min 4-1/2 in. (114 mm) thick steel-reinforced lightweight or normal weight (100-150 pcf or 1600-2400 kg/m^3) structural concrete. Wall may also be constructed of any UL Classified Concrete Blocks.*
   See Concrete Blocks (CATZ) category in the Fire Resistance Directory for names of manufacturers.
3. **Joint System – Fill, Void or Cavity Materials*** – Max width of joint (at time of installation) is 3/4 in. (19 mm). The joint system shall consist of a min 5/8 in. (16 mm) thickness of fill material applied within the joint, flush with each surface of wall.

GRABBER CONSTRUCTION PRODUCTS INC – GrabberGard IFC or GrabberGard EFC

***Bearing the UL Classification Marking**

Understanding a ITS - Warnock Hersey - Firestop Listing

ITS-Warnock Hersey uses an Alpha/Alpha-numeric identification systems

First Alpha Componet - Manufacturer's Code

Example

JWA/PHV 120-19

Grabber Construction Products

Second Alpha Componet - Penetration and Orientatation Code

Example

JWA/PHV 120-19

Penetration

Horizontal Orientation (i.e. floors)

Vertical Orientation (i.e. walls)

First Numerical Componet - Hourly Rating Code

Example

JWA/PHV 120-19

060 – 60 minutes (1 hour)

120 – 120 minutes (2 hours)

180 – 180 minutes (3 hours)

240 – 240 minutes (4 hours)

Second Numerical Componet - System Number

Example

JWA/PHV 120-19

19th PHV system for that firestop manufacturing company

FL0712

Grabber Construction Products
5255 Country Club Drive
Highland, Utah 84003

GrabberGard EFC
GrabberGard IFC

Design No.: JWA/PH 60-01

Single Penetrations
Horizontal (floor/ceiling)
Test Standards: ASTM E-814, UL 1479: Non-metallic Open and Closed Systems
ULC S115-M05: Non-metallic Closed Pipe
Positive Pressure Differential – 2.5 Pa (0.01 in. of water) Minimum

Penetrating Material & Size	Design Number	Max Hole Size	Annular Space	ASTM E-814		ULC S115-M05		
				"F"	"T"	"F"	"FH"	"FT"
PVC up to 1-1/2 in.	A	2-1/2"	0" – 1/2"	1 hour	50 min	1 hour	1 hour	50 min
PVC up to 2 in.	A	3"	0" – 1/2"	N/A	N/A	1 hour	N/A	15 min
Nonmetallic Rigid Conduit up to 1-1/2 in.	A	2-1/2"	0" – 1/2"	1 hour	50 min	1 hour	1 hour	50 min
Nonmetallic Rigid Conduit up to 2 in.	A	3"	0" – 1/2"	N/A	N/A	1 hour	N/A	15 min
PEX up to 1 in	A	2"	0" – 1/2"	1 hour	10 min	1 hour	1 hour	10 min
CPVC up to 2 in.	A	3"	0" – 1/2"	N/A	N/A	1 hour	N/A	15 min
PEX up to 1 in	B	2"	0" – 1/2"	1 hour	40 min	1 hour	1 hour	40 min
PE/Al/PE up to ¾ in.	B	1-3/4"	0" – 3/4"	1 hour	1 hour	1 hour	1 hour	1 hour
PEX/Al/PEX up to ¾ in.	B	1-3/4"	0" – 3/4"	1 hour	1 hour	1 hour	1 hour	1 hour

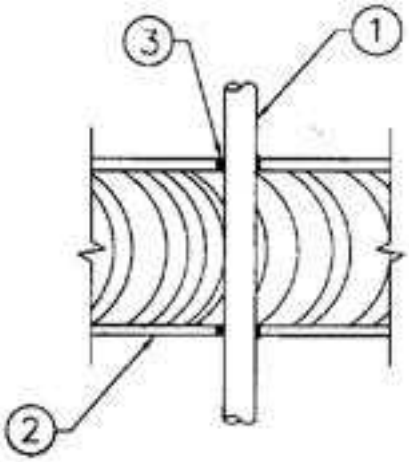

DESIGN A

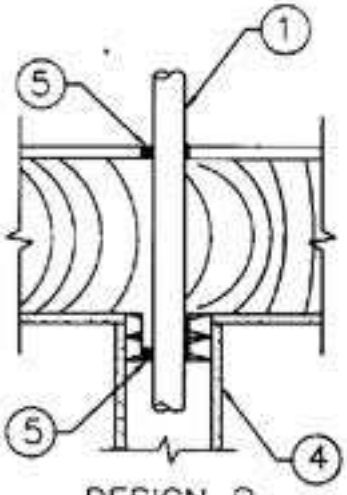

DESIGN B

Grabber Construction Products
5255 Country Club Drive
Highland, Utah 84003

GrabberGard EFC
GrabberGard IFC

JWA/PH 60-01

System Design Instructions

1. **Penetrating Item:** Centered or offset in hole, see table above. Single penetrations only, maximum hole size not to exceed table above.
2. **Floor/Ceiling Assembly:** 1 hour fire rated ASTM E-119 or CAN/ULC S101 wood framed gypsum wallboard (GWB) floor/ceiling assemblies with or without concrete topping, having a minimum depth of 10¾" (275mm).

Design A

3. **Firestop System Component 1:** GRABBER CONSTRUCTION PRODUCTS INC. – GrabberGard EFC* or GrabberGard IFC* fully filling the annular space to the full depth of the membrane. On 0 in. to 1/4 in. (6 mm) annular space a min 1/2 in. (13 mm) diam bead of sealant must be placed around penetrating item.

Design B

4. **Wall Assembly:** Rated or non-rated metal or wood framed gypsum wallboard (GWB) wall assemblies.
5. **Firestop System Component 1:** GRABBER CONSTRUCTION PRODUCTS INC. – GrabberGard EFC* or GrabberGard IFC* fully filling the annular space to the full depth of the membrane. Fill header and sill plate contained in wall assembly min 5/8 in. (16 mm) depth. On 0 in. to 1/4 in. (6 mm) annular space a min 1/2 in. (13 mm) diam bead of sealant must be placed around penetrating item.

***WH Labeled Component**

Warnock Hersey

Grabber Construction Products
5255 Country Club Drive
Highland, Utah 84003

GrabberGard EFC
GrabberGard IFC

Design No.: JWA/PH 60-02

Single or Multiple Penetrations Only
Horizontal (floor/ceiling)
Test Standards: ASTM E-814, UL 1479: Non-metallic Open and Closed Systems
ULC S115-M05: Non-metallic Closed Pipe
Positive Pressure Differential – 2.5 Pa (0.01 in. of water) Minimum

Penetrating Material & Size	Max Hole Size	Annular Space	"F" Rating	"T" Rating
IPEX PE/Al/PE up to 1" ID	See Item 1	0 - 1-1/4"	1 hour	41 min
IPEX PEX/Al/PEX up to 1" ID	See Item 1	0 - 1-1/4"	1 hour	41 min

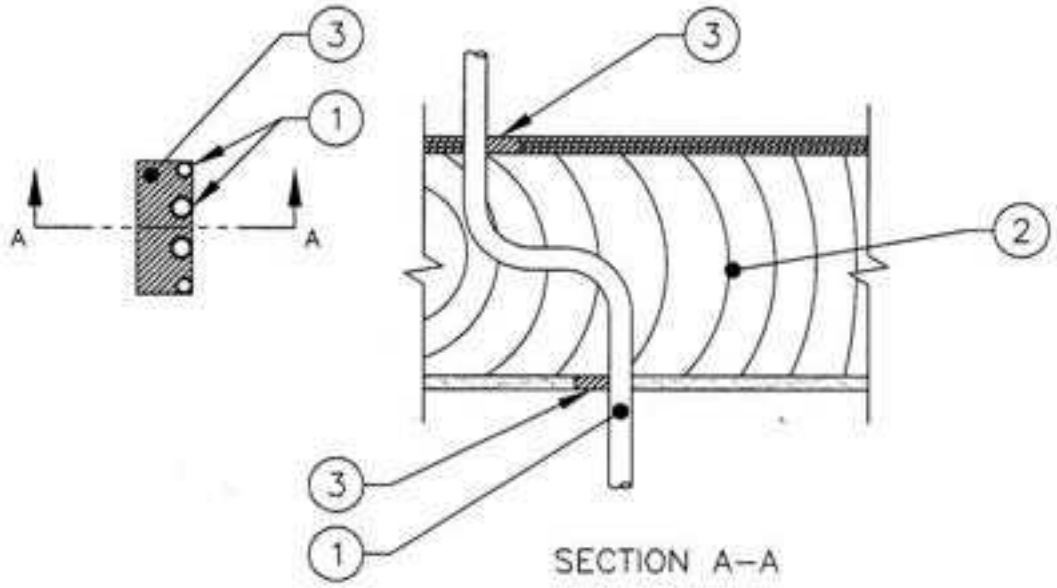

System Design Instructions

1. **Penetrating Item:** Centered or offset in hole, see table above. Up to 4 penetrations of polyethylene tubing, 1 in. (25mm) ID or less in diameter. Maximum opening size to be 15 sq in. ((9375 sq mm) with max dimension of 6 in. (150 mm). All penetrating items to be reliably supported.
2. **Floor/Ceiling Assembly:** 1 hour rated ASTM E-119 wood framed floor/ceiling assembly.
   a.) Subfloor with or without concrete topping mixture.
   b.) Wood or composite wood joists.
   c.) Gypsum wallboard.
3. **Firestop System, Component:** GRABBER CONSTRUCTION PRODUCTS INC. – GrabberGard EFC* or GrabberGard IFC* - Min. 3/4 in thickness of fill material applied within the annulus, flush with top surface of floor. Min 5/8 in. thickness of fill material applied within the annulus, flush with bottom surface of ceiling. Min. 1/2 in. diam. bead of fill material applied at the penetrant/floor and penetrant/ceiling interfaces at point contact locations on both sides of assembly.

***WH Labeled Component**

ITS Intertek Testing Services

FL0712

Warnock Hersey

Grabber Construction Products
5255 Country Club Drive
Highland, Utah 84003

GrabberGard EFC
GrabberGard IFC

Design No.: JWA/PH 60-03

Single Penetrations
Horizontal (floor/ceiling)
Test Standards: ASTM E-814, UL 1479
CAN/ULC S115-M05: open and closed systems
Test Furnace Internal Positive Pressure Differential – 50 Pa (0.20 in. of water) Minimum

Penetrating Material & Size	Max Hole Size	Annular Space	Fire "F" Rating	Fire/Hose "FH" Rating	Temp Rating "FTH" Rating
PVC Plastic Pipe 1-1/2" – 4"	5"	0" – 1/2"	Up to 1 Hr	Up to 1 Hr	Up to 1 Hr
ccPVC Plastic Pipe 1-1/2" – 4"	5'	0" – 1/2"	Up to 1 Hr	Up to 1 Hr	Up to 1 Hr
ABS Plastic Pipe 1-1/2" - 4"	5"	0" – 1/2"	Up to 1 Hr	Up to 1 Hr	Up to 1 Hr
ccABS Plastic Pipe 1-1/2" - 4"	5"	0" – 1/2"	Up to 1 Hr	Up to 1 Hr	Up to 1 Hr

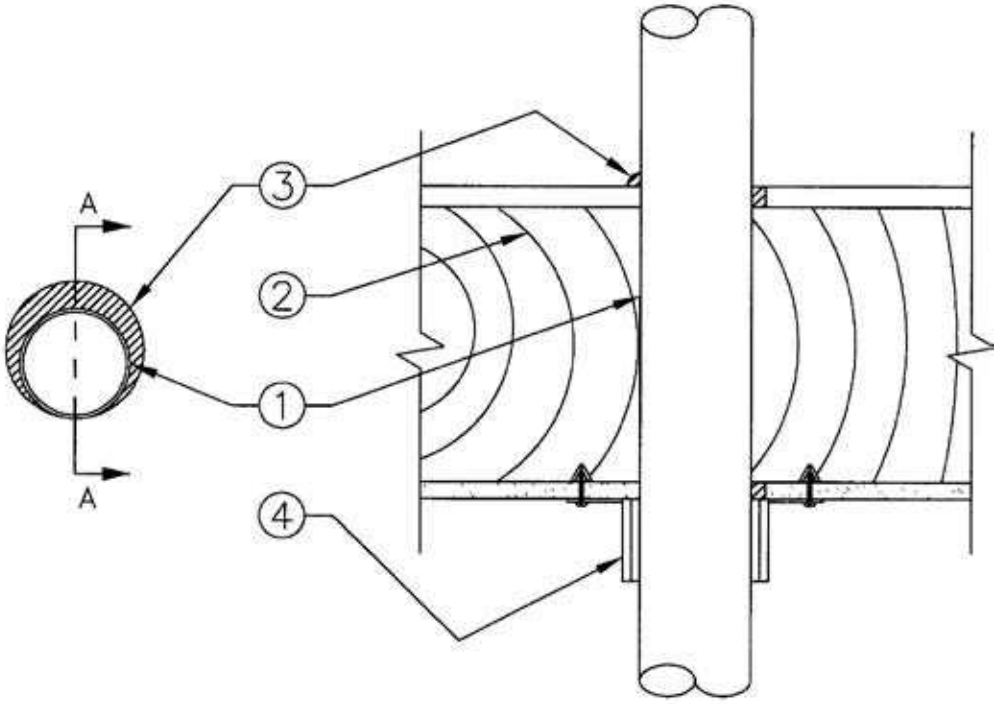

System Design Instructions

1. **Penetrating Item:** Centered or offset in hole, see table above. Single penetrations only, maximum hole size not to exceed table above.
2. **Floor Assembly:** 1 hour rated CAN/ULC S101 or equivalent wood framed gypsum wallboard (GWB) floor/ceiling assemblies with or without concrete topping, minimum nominal 10" depth wood or composite wood floor joists.
3. **Firestop System, Component 1:** GRABBER CONSTRUCTION PRODUCTS INC. – GrabberGard EFC* or GrabberGard IFC* installed at a minimum thickness of 3/4" (19mm) within the annulus on top surface of floor assembly and a min of 5/8" (15mm) within the annulus of the gypsum wallboard ceiling membrane. On 0 – 1/4" (6mm) annular spaces of the floor surface, a 1/2" (13mm) diameter fillet bead must be placed around the penetrating item.
4. **Firestop System, Component 2:** PFP Partners – Plastic Pipe Collar* (PPC) specifically sized for diameter of pipe. PPC secured to floor/ceiling assembly using 1-1/2" toggle bolts over fender washers, at joist locations use 1-1/2" drywall screws to fasten collar directly to joists.

***WH Labeled Component**

ITS Intertek Testing Services

FL0712

Grabber Construction Products
5255 Country Club Drive
Highland, Utah 84003

GrabberGard EFC
GrabberGard IFC

Design No.: JWA/PH 60-04

Single Penetrations
Horizontal (floor/ceiling)
Test Standards: ASTM E-814, UL 1479
ULC S115-M05: non-metallic open and closed systems
Test Furnace Internal Positive Pressure Differential – 50 Pa (0.20 in. of water) Minimum

Penetrating Material & Size	Max Hole Size	Annular Space	ASTM E814/UL 1479 "F" & "T" Rating	ULC S115-M05 "FTH" Rating
ccABS Plastic Pipe to 3" w/ branch line to 1-1/2"**	4" 2"	1/2" 0" – 1/2"	Up to 1 hour	Up to 1 hour
ABS Plastic Pipe to 3" w/ branch line to 1-1/2"**	4" 2"	1/2" 0" – 1/2"	Up to 1 hour	Up to 1 hour
PVC Plastic Pipe to 3" w/ branch line to 1-1/2"**	4" 2"	1/2" 0" – 1/2"	Up to 1 hour	Up to 1 hour
ccPVC Plastic Pipe to 3" w/ branch line to 1-1/2"**	4" 2"	1/2" 0" – 1/2"	Up to 1 hour	Up to 1 hour
CPVC Plastic Pipe to 2" w/ branch line to 2"***	3" 2-1/2"	1/2" 0" – 1/2"	Up to 1 hour	Up to 1 hour

** For use with configuration #1 only
*** For use with both configuration #1 or #2

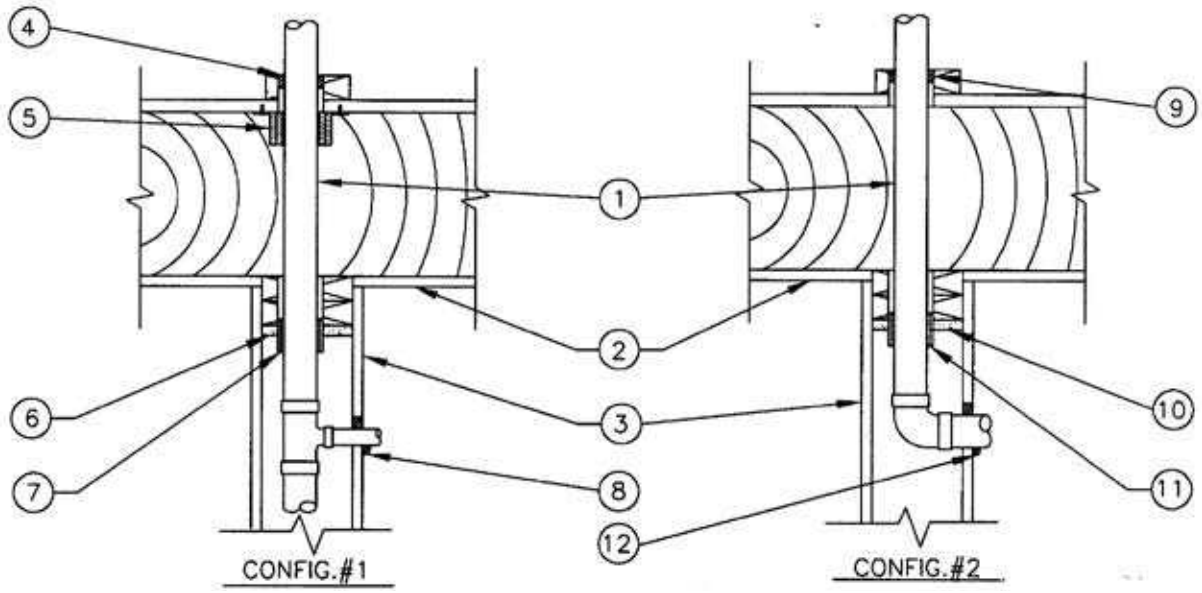

System Design Instructions

1. **Penetrating Item:** Main line to be centered in hole and branch line to be centered or offset in hole, see table above. Elbows, Tee's and couplings can penetrate the firestop system. (cc abv. for Cellular Core)
2. **Floor/Ceiling Assembly:** 1 hour rated ASTM E-119 or CAN/ULC S101 floor/ceiling/wall assemblies with or without concrete topping, having a minimum depth of 10¾ in. (275mm).
3. **Wall Assembly:** Fire rated or non-fire rated gypsum wall assembly with min. nom. 6-in. wide wood studs.

ITS Intertek Testing Services

FL0712

Grabber Construction Products
5255 Country Club Drive
Highland, Utah 84003

GrabberGard EFC
GrabberGard IFC

JWA/PH 60-04

Configuration #1

4. **Firestop System, Component 1:** John Wagner & Assoc. Inc. dba GRABBER CONSTRUCTION PRODUCTS – GrabberGard EFC* or GrabberGard IFC* fully filling the annular space in the sill plates contained within the wall assembly to a 3/4 in. (19mm) depth.
5. **Firestop System, Component 2:** PFP Partners – Plastic Pipe Collar* (PPC) specifically sized for diameter of pipe. PPC secured to the underside of the sub-floor using min. 8 x 9/16" wafer screws.
6. **Firestop System, Component 3:** One layer of 5/8 in. Type "X" gypsum wallboard insert installed within stud cavity in which the penetration occurs and securely fastened with drywall screws on the underside of header plate.
7. **Firestop System, Component 4:** PFP Partners – Wrap Strip WS1* two layers installed in the annular space between pipe and header plates. Aluminum foil tape to be installed around the circumference of the outer wrap strip and pipe assembly for securing wrap strips in place.
8. **Firestop System, Component 5:** GRABBER CONSTRUCTION PRODUCTS INC. – GrabberGard EFC* or GrabberGard IFC* to be installed in fire-rated chase walls only. Min 5/8 in. thickness in the annular space in the membrane of the chase wall. On 0 in. to ¼ in. (6mm) annular spaces a 3/8 in. (10mm) diameter fillet bead must be placed around the penetrating item on the surface of the GWB assembly.

Configuration #2

9. **Firestop System, Component 1:** GRABBER CONSTRUCTION PRODUCTS INC. – GrabberGard EFC* or GrabberGard IFC* fully filling the annular space in the sill plates contained within the wall assembly to a 3/4" (19mm) depth.
10. **Firestop System, Component 3:** One layer of 5/8 in. Type "X" gypsum wallboard insert installed within stud cavity in which the penetration occurs and securely fastened with drywall screws on the underside of header plate.
11. **Firestop System, Component 4:** PFP Partners – Wrap Strip WS1* two layers installed in the annular space between pipe and header plates.
12. **Firestop System, Component 5:** GRABBER CONSTRUCTION PRODUCTS INC. – GrabberGard EFC* or GrabberGard IFC* to be installed in fire-rated chase walls only. Min 5/8 in. thickness in the annular space in the membrane of the chase wall. On 0 in. to ¼ in. (6mm) annular spaces a 3/8 in. (10mm) diameter fillet bead must be placed around the penetrating item on the surface of the GWB assembly.

***WH Labeled Component**

Grabber Construction Products
5255 Country Club Drive
Highland, Utah 84003

GrabberGard EFC
GrabberGard IFC

Design No.: JWA/PH 60-05

Single Penetrations
Horizontal (floor/ceiling)
Test Standards: ASTM E-814, UL 1479
CAN/ULC S115-M05: non-metallic open and closed systems
Positive Pressure Differential – 50 Pa (0.2 in. of water) Minimum

Penetrating Material & Size	Max Hole Size	Annular Space	ASTM E-814 Fire "F" Rating	ULC S115-M05 Fire/Hose "FH" Rating	ULC S115-M05 Temp Rating "FTH" Rating
ccABS Plastic Pipe to 2"	3"	0" – 1/2"	Up to 1 Hour	Up to 1 Hour	Up to 1 Hour
ABS Plastic Pipe to 2"	3"	0" – 1/2"	Up to 1 Hour	Up to 1 Hour	Up to 1 Hour
PVC Plastic Pipe to 2"	3"	0" – 1/2"	Up to 1 Hour	Up to 1 Hour	Up to 1 Hour
ccABS Plastic Pipe to 4"	5"	0" – 1/2"	Up to 1 Hour	Up to 1 Hour	Up to 1 Hour
ABS Plastic Pipe to 4"	5"	0" – 1/2"	Up to 1 Hour	Up to 1 Hour	Up to 1 Hour
PVC Plastic Pipe to 4"	5"	0" – 1/2"	Up to 1 Hour	Up to 1 Hour	Up to 1 Hour
ccPVC Plastic Pipe to 4"	5"	0" – 1/2"	Up to 1 Hour	Up to 1 Hour	Up to 1 Hour
CPVC Plastic Pipe to 4"	5"	0" – 1/2"	Up to 1 Hour	Up to 1 Hour	Up to 1 Hour

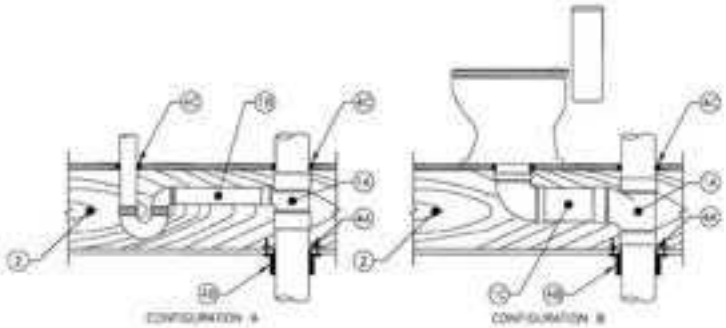

System Design Instructions

1. **Penetrating Item:** Centered or offset in hole, see table above. Elbows, Tee's and couplings can penetrate the firestop system.
   a) **Max riser pipe size 4"** – Configuration A & B
   b) **Max branch pipe size 2"** – Configuration A
   c) **Max branch pipe size 4"** – Configuration B
2. **Floor/Ceiling Separations:** 1 hour rated ASTM E-119 or CAN/ULC S101 metal or wood framed gypsum wallboard (GWB) floor/ceiling assemblies with or without concrete topping, having a minimum depth of 10¾" (275mm).
3. **Wall Fire Separations (Optional – Not Shown):** Rated or non-rated metal or wood framed gypsum wall board (GWB) wall assemblies, when used, install the firestop system as detailed in (Item 4) to the underside of single or double top plates.
4. **Firestop System Component –**
   a) GRABBER CONSTRUCTION PRODUCTS INC. – GrabberGard EFC* or GrabberGard IFC* installed at a minimum thickness 5/8" (15mm) within the annulus of the gypsum wallboard ceiling membrane, as a smoke seal.
   b) PFP Partners – Plastic Pipe Collar* (PPC) specifically sized for diameter of pipe. PPC secured to assembly using 1-1/2" (38 mm) toggle bolts over fender washers, at joist locations use 1-1/4" (32 mm) drywall screws and fender washers to fasten collar directly to joists. Use 1-1/4" (32 mm) drywall screws and fender washers to fasten collar to single or double top plates, when wall is used.
   c) GRABBER CONSTRUCTION PRODUCTS INC. – GrabberGard EFC* or GrabberGard IFC* installed at a minimum thickness of 3/4" (19mm) within the annulus on top or bottom surface of floor assembly. On 0 – 1/4" (6mm) annular spaces of the floor surface, a 1/2" (13mm) diameter fillet bead must be placed around the penetrating item.

***WH Labeled Component**

ITS Intertek Testing Services

FL0712

Grabber Construction Products
5255 Country Club Drive
Highland, Utah 84003

GrabberGard EFC
GrabberGard IFC

Design No.: JWA/PH 60-06

Single Penetrations
Horizontal (floor/ceiling)
Test Standards: ASTM E-814, UL 1479
ULC S115-M05: non-metallic open and closed systems
Test Furnace Internal Positive Pressure Differential – 50 Pa (0.20 in. of water) Minimum

Penetrating Material & Size	Design Number	Max Hole Size	Annular Space	ASTM E-814		ULC S115-M05		
				"F"	"T"	"F"	"FH"	"FT"
ccABS or ABS pipe up to 3" w/ branch line up to 1-1/2"	A	4-1/8" 2-1/2"	1/2" 0" – 1/2"	N/A	N/A	1 hour	N/A	55 min
ccPVC or PVC pipe up to 3" w/ branch line up to 1-1/2"	A	4-1/8" 2-1/2"	1/2" 0" – 1/2"	1 hour	55 min	1 hour	1 hour	55 min
ccPVC Plastic pipe up to 3" w/ branch line up to 1-1/2"	B	4-1/8" 2-1/2"	1/2" 0" – 1/2"	N/A	N/A	1 hour	N/A	25 min
ccPVC or PVC pipe up to 1-1/2"	C	3"	¼" – ½"	N/A	N/A	1 hour	N/A	1 hour
ccABS or ABS pipe up to 1-1/2"	C	3"	¼" – ½"	1 hour	1 hour	1 hour	1 hour	1 hour
Nonmetallic Rigid Conduit up to 1-1/2"	C	3"	¼" – ½"	N/A	N/A	1 hour	N/A	1 hour
ccPVC or PVC pipe up to 1-1/2"	D	3"	¼" – ½"	1 hour	50 min	1 hour	1 hour	50 min
ccABS or ABS pipe up to 1-1/2"	D	3"	¼" – ½"	1 hour	1 hour	1 hour	1 hour	1 hour
Nonmetallic Rigid Conduit up to 1-1/2"	D	3"	¼" – ½"	1 hour	1 hour	1 hour	1 hour	50 min

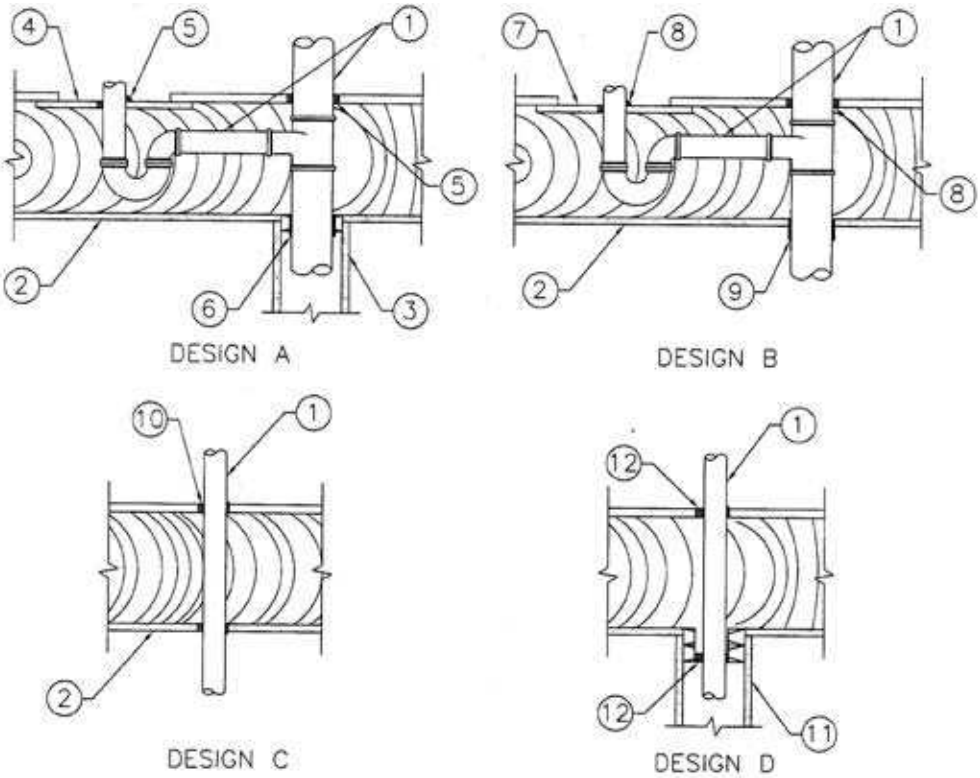

System Design Instructions

1. **Penetrating Item:** Main line to be centered in hole and branch line to be centered or offset in hole, see table above.

Grabber Construction Products
5255 Country Club Drive
Highland, Utah 84003

GrabberGard EFC
GrabberGard IFC

JWA/PH 60-06

2. **Floor/Ceiling Assembly:** 1 hour fire rated ASTM E-119 or CAN/ULC S101 wood framed gypsum wallboard (GWB) floor/ceiling assemblies with or without concrete topping, having a minimum depth of 10¾" (275mm).

Design A

3. **Wall Assembly:** Rated or non-rated metal or wood framed gypsum wallboard (GWB) wall assemblies.

4. **Firestop System Component 1:** One layer of nom 5/8" (16 mm) Type X gypsum wallboard insert securely fastened with drywall screws on 4" (100 mm) centers to reduce tub drain hole sizes up to 12" x 16" (300 x 400 mm).

5. **Firestop System Component 2:** GRABBER CONSTRUCTION PRODUCTS INC. – GrabberGard EFC* or GrabberGard IFC* fully filling the annular space to the full depth of the membrane. On 0" to 1/4" (6 mm) annular space a min 1/2" (12 mm) diam bead of must be placed around penetrating item.

6. **Firestop System Component 3:** PFP Partners – Wrap Strip WS1* to be installed around penetrants. Min two layers installed in the annular space between the pipe and header plate. Aluminum foil tape to be installed around circumference of the outer wrap strip and pipe assembly for securing wrap strips in place.

Design B

7. **Firestop System Component 1:** One layer of nom 5/8" (16 mm) Type X gypsum wallboard insert securely fastened with drywall screws on 4" (100 mm) centers to reduce tub drain hole sizes up to 12" x 16" (300 x 400 mm).

8. **Firestop System Component 2:** GRABBER CONSTRUCTION PRODUCTS INC. – GrabberGard EFC* or GrabberGard IFC* fully filling the annular space to the full depth of the membrane. On 0" to 1/4" (6 mm) annular space a min 1/2" (12 mm) diam bead of must be placed around penetrating item.

9. **Firestop System Component 3:** PFP Partners – Wrap Strip WS1* to be installed around penetrants. Min two layers installed in the annular space between the pipe and ceiling membrane. Aluminum foil tape to be installed around circumference of the outer wrap strip and pipe assembly for securing wrap strips in place.

Design C

10. **Firestop System Component 1:** For PVC or ccPVC pipe only – GRABBER CONSTRUCTION PRODUCTS INC. – GrabberGard EFC* or GrabberGard IFC* fully filling the annular space to the full depth of the membrane. On 0" t o 1/4" (6 mm) annular space a min 1/2" (12 mm) diam bead of must be placed around penetrating item.

10a. **Firestop System Component 1:** For ABS or ccABS pipe only – GRABBER CONSTRUCTION PRODUCTS INC. – GrabberGard IFC* fully filling the annular space to the full depth of the membrane. On 0" to 1/4" (6 mm) annular space a min 1/2" (12 mm) diam bead of must be placed around penetrating item

Design D

11. **Wall Assembly:** Rated or non-rated metal or wood framed gypsum wallboard (GWB) wall assemblies.

12. **Firestop System Component 1:** GRABBER CONSTRUCTION PRODUCTS INC. – GrabberGard EFC* or GrabberGard IFC* fully filling the annular space to the full depth of the membrane. Fill header and sill plate contained in wall assembly min 5/8 in. (16 mm) depth. On 0" to 1/4" (6 mm) annular space a min 1/2" (12 mm) diam bead of must be placed around penetrating item.

***WH Labeled Component**

Grabber Construction Products
5255 Country Club Drive
Highland, Utah 84003

GrabberGard IFC

Design No. JWA/PH 120-01

Single Penetrations Only
Horizontal (floor/ceiling)
Test Standards: ASTM E-814, UL 1479, ULC S115-M05
Test Furnace Internal Positive Pressure Differential – 2.5 Pa (0.01 in. of water) Minimum

Penetrating Material & Size	Max Hole Size	Annular Space	Fire "F" Rating	Fire/Hose "FH" Rating	Temp Rating "FTH" Rating
Steel and Cast Iron Pipe to 4" Sch 10 & up	6"	0" – 1-1/2"	2 Hour	2 Hour	2 Hour

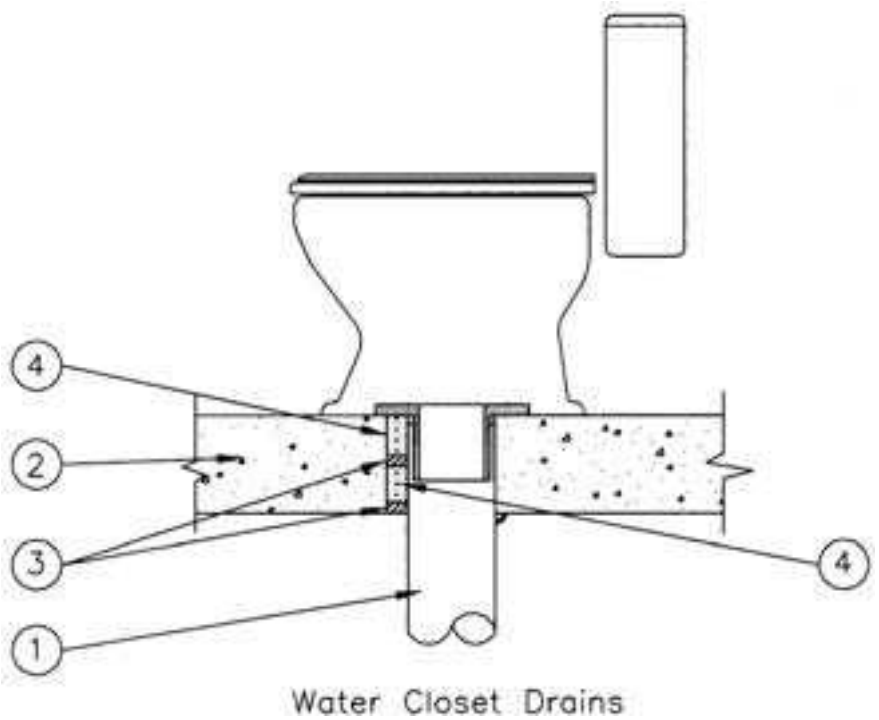

System Design Instructions

1. **Penetrating Item:** See table above. Single penetrations only.

2. **Floor/Ceiling Fire Separations:** Cast in place normal or light density concrete floor/ceiling assemblies having a minimum thickness of 4-1/2 in. (115mm).

3 **Firestop System, Component 1:** GRABBER CONSTRUCTION PRODUCTS INC.– GrabberGard IFC* installed at a minimum thickness of 1/2 in. (13mm) within the annulus to completely cover the underside of both mineral wool inserts. On 0 in. to 1/4 in. (6mm) annular spaces a 3/8 in. (10mm) diameter fillet bead must be placed around the penetrating item on the bottom surface of the concrete.

4. **Firestop System, Component 2:** Filler material, mineral wool insulation with a minimum density of 4-6 PCF (68 kg/m3) compressed a minimum of 25% into the annular space in two pieces at a minimum total thickness of 3-1/2 in. (90mm). Top insert of mineral wool to be min 2 in. (51mm) thick and bottom insert of mineral wool to be min 1-1/2 in. (39mm) thick. Recess filler material 1/2 in. (13mm) from the bottom surface of the concrete for sealant placement.

***WH Labeled Component**

ITS Intertek Testing Services

FL0712

Grabber Construction Products
5255 Country Club Drive
Highland, Utah 84003

GrabberGard EFC
GrabberGard IFC

Design No. JWA/PH 120-02

Pipe Insulation Through Penetrations
Single Penetrations Only
Horizontal (floor/ceiling)
Test Standards: ASTM E-814, UL 1479, ULC S115-M05
Test Furnace Internal Positive Pressure Differential – 2.5 Pa (0.01 in. of water) Minimum

Penetrating Material & Size	Max Hole Size	Annular Space	Fire "F" Rating	Fire/Hose "FH" Rating	Temp Rating "FTH" Rating
Steel and Cast Iron Pipe to 8" Sch 10 & up	10"	0" – 1/2"	2 Hour	2 Hour	69 min

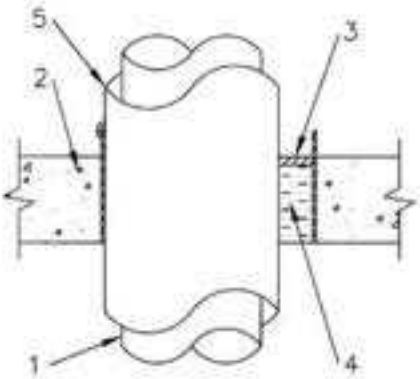

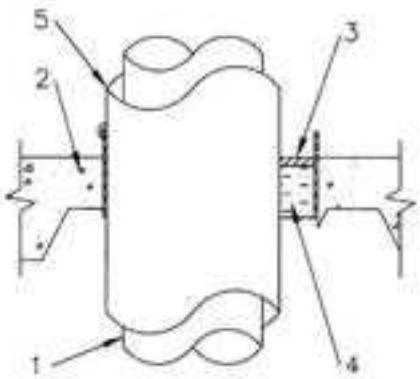

System Design Instructions

1. **Penetrating Item:** See table above. Single penetrations only.
   - **a) Metal Sleeve:** Min 24 gauge or heavier metal sleeve fit tightly into the opening flush with or max 1-1/2" (38mm) above the top surface of the floor assembly.
2. **Floor/Ceiling Fire Separations:**
   - **a)** Min 20 gauge or heavier galvanized steel decking with min 1-1/2" (38mm) flute height firmly supported, with min 3" (77mm) concrete cover.
   - **b)** Cast in place normal or light density concrete floor/ceiling assemblies having a minimum thickness of 4-1/2" (115mm).
3. **Firestop System, Component 1:** GRABBER CONSTRUCTION PRODUCTS INC. – GrabberGard EFC* or GrabberGard IFC* installed at a minimum thickness of 1/2" (13mm) within the annulus on the top surface of the floor assembly. On 0" to 1/4" (6mm) annular spaces a 3/8" (10mm) diameter fillet bead must be placed around the penetrating item on the surface of the concrete.
4. **Firestop System, Component 2:** Filler material, mineral wool insulation with a minimum density of 4-6 PCF (68 kg/m3) compressed a minimum of 25% into the annular space at a minimum depth of 3-1/2" (90mm). Recess filler material 1/2" (13mm) for sealant placement.
5. **Through Insulating Material:** Koolphen K rigid phenolic foam insulation having a 1" (25mm) wall thickness.

***WH Labeled Component**

ITS Intertek Testing Services

FL0712

Warnock Hersey

Grabber Construction Products
5255 Country Club Drive
Highland, Utah 84003

GrabberGard EFS

Design No. JWA/PH 120-03

Horizontal or Vertical Expansion/Control Joints
Test Standards: ASTM E-119, ULC S115-M05
L-Rating At Ambient < 1 CFM/Lin Ft
L-Rating At 400° F < 1 CFM/Lin Ft
Test Furnace Internal Positive Pressure Differential – 2.5 Pa (0.01 in. of water) Minimum

Penetrating	Max	Fire	Temp
Material & Size	Width	"F" Rating	"FT" Rating
Horizontal Joints	10"	up to 2hrs	3 min

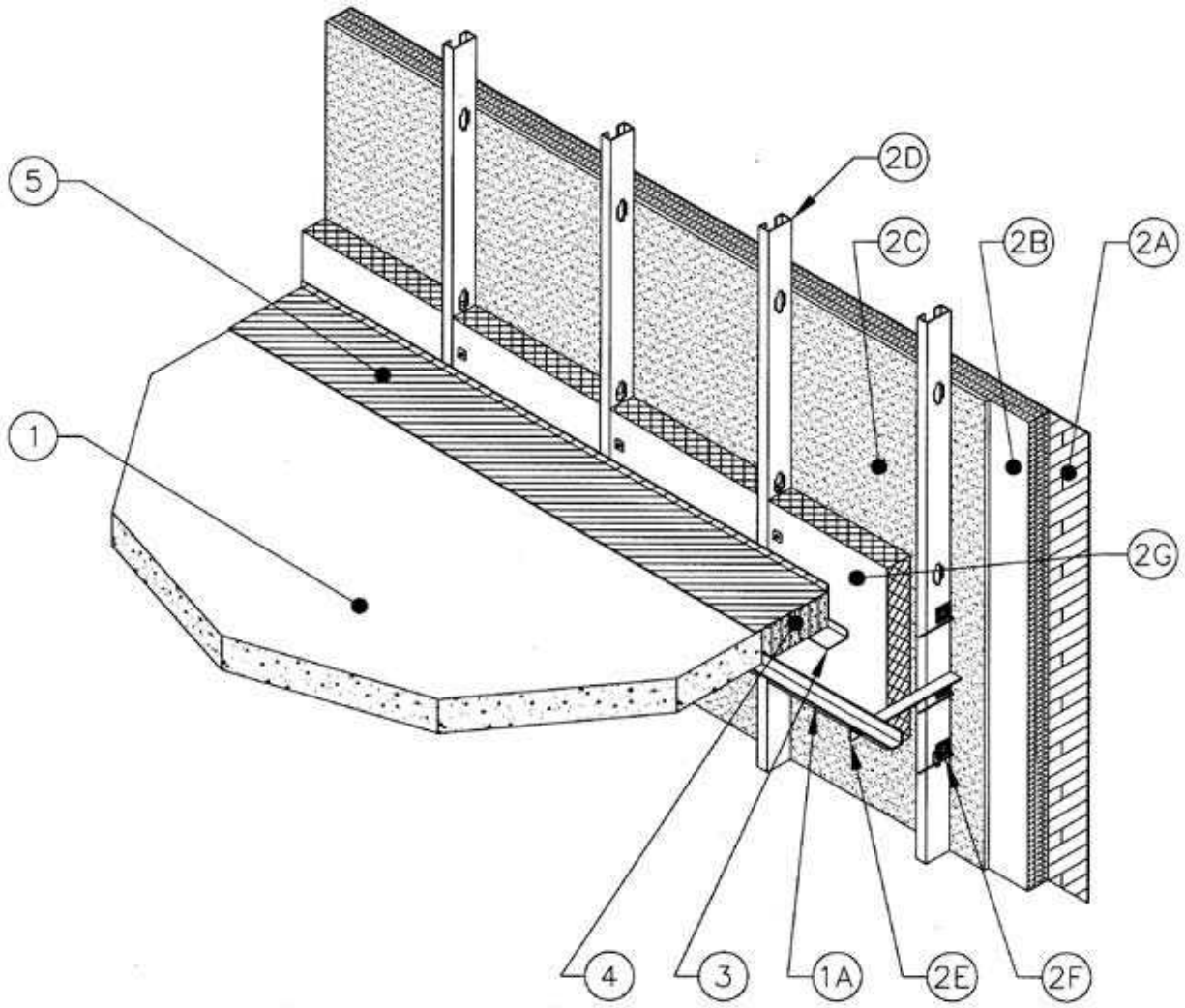

System Design Instructions

1. **Floor/Ceiling Assemblies:** ASTM E-119 and CAN/ULC S101 up to 2 hour rated floor/ceiling assemblies; Cast in place normal or light density concrete floor/ceiling assemblies having a minimum cross section thickness of 4-1/2 in. (114mm) and including the following:
   a) **Steel Angle** – Perimeter of floor assembly to be provide with min 1-1/2 in. by 1-1/2 in. by 3/16 in. thick cast-in-place structural steel angle for weld-attachment of EIFS mounting attachment (Item 2E).

ITS Intertek Testing Services

FL0712

Grabber Construction Products
5255 Country Club Drive
Highland, Utah 84003

GrabberGard EFS

JWA/PH 120-03

2. **Exterior Insulation Finish System:** This Exterior Insulation Finish System (EIFS) to be constructed of the materials and in the manner described by the EIFS wall manufacturer's installation instructions and shall include the following features:
   a) **Cementitious Finish Coating** – Min 1/16 in. thick cementitious finish coating applied as per EIFS wall manufacturer's instructions.
   b) Expanded Polystyrene (EPS) Foam Boards – Max 3 in. thickness of expanded polystyrene foam boards applied to exterior gypsum board as per EIFS wall manufacturer's instructions.
   c) **Exterior Gypsum Board** – Min 1/2 in. thick exterior gypsum boards applied to steel studs with min 1 in. long pan head screws at 10 OC. Gypsum boards installed as per EIFS wall manufacturer's instructions.
   d) **Steel Stud Framing** – Vertical framing members shall be min 3-5/8 in. by 1-1/4 in., 16 ga steel "C" studs. Attachment shall be according to EIFS wall manufacturer's guidelines. Vertical framing shall not exceed a spacing of 24 in. OC.
   e) **Mounting Attachment** – Min 1-1/2 in. by 1-1/2 in. by 3/16 in. thick structural steel angle weld-attached to steel stud framing and cast-in-place structural angle located max 48 in. OC.
   f) **Impaling Pins** – Min 6-1/2 in. long 12 ga steel pins, welded or mechanically fastened to flat side of steel studs and bent 90 degrees perpendicular to the face of the curtain wall insulation. Pins to be installed at max 8 in. OC vertically and at max 24 in. OC horizontally.
   g) **Curtain Wall Insulation** – Min 4 in. 4 pcf mineral wool board, unfaced or faced on one side with aluminum foil/scrim vapor retarder, supplied in min 24 in. wide boards. Mineral wool board to be impaled on pins, flush with interior surface of steel studs, and secured in position with min 1-1/4 in. square steel clinch shields. Fill the cavity of all "C" shaped studs with insulation. A single piece of 24 in. wide mineral wool to extend a min 12 in. below and min 8 in. above the of the bottom and top surfaces of the concrete floor assembly.
3. **Firestop System Component 1:** Steel angle manufactured from min 16 ga steel to be welded or mechanically fastened to vertical steel studs. Angle to be installed such that the horizontal leg of angle is min 4 in. below the top surface of the concrete floor assembly to support the mineral wool insulation(Item 4). Size and installation of steel angle is as follows:
   a) **Joints ranging from 0 to max 2 in.** – No angle is required.
   b) **Joints ranging from min 2 to max 6 in.** – Min 1 by 1 in. angle to be installed.
   c) **Joints ranging from min 6 to max 10 in.** – Min 1 by 3 in. angle to be installed such that the 3 in. leg is installed horizontally with the 1 in. leg installed vertically.
4. **Firestop System Component 2:** Filler material mineral rock wool or ceramic fiber insulation with a minimum density of 4-6 PCF (68 kg/m3) with mineral wool fibers running perpendicular to curtain wall and compressed a minimum of 20% into the joint space at a minimum depth of 4 in. (102 mm). As an alternative, the min 4 pcf mineral wool maybe installed such that the mineral wool fibers run parallel to curtain wall and are compressed a minimum of 40% into the joint space at a minimum depth of 4in. (102 mm).
5. **Firestop System Component 3:** GRABBER CONSTRUCTION PRODUCTS INC. – GrabberGard EFS* (mastic) for horizontal applications sprayed into place with a minimum wet film thickness of 3/32 in. (2.5 mm). Always overlap GrabberGard EFS* onto the surface of the substrate a minimum of 1in. (25 mm). Do not thin GrabberGard EFS* firestop mastic when spraying, use equipment capable of applying material as supplied.

***WH Labeled Component**

Warnock Hersey

Grabber Construction Products
5255 Country Club Drive
Highland, Utah 84003

GrabberGard EFC
GrabberGard IFC

Design No. JWA/PH 120-04

Single Penetrations
Horizontal (floor)
Test Standards: ASTM E-814, UL 1479, ULC S115-M05
Test Furnace Internal Positive Pressure Differential – 2.5 Pa (0.01 in. of water) Minimum

Penetrating Material & Size	Max Hole Size	Annular Space	ASTM E 814/UL1479		ULC S115-M95	
			"F"	"T"	"FH"	"FTH"
Steel & Cast Iron Pipe (1" to 24") Sch 40 & up	29"	0" – 4"	2 Hour	30 min.	2 Hour	30 min.

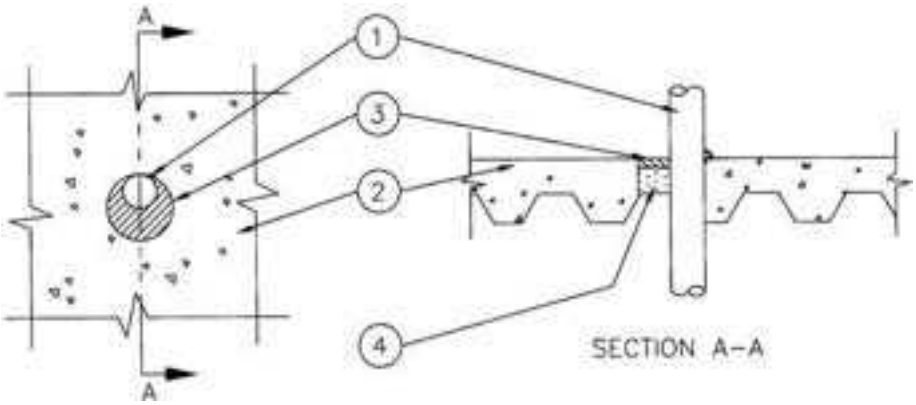

System Design Instructions

1. **Penetrating Item:** Centered or offset in hole, see table above. Single penetrations only, maximum hole size not to exceed table above.
2. **Floor/Ceiling Fire Separations:** Min 20 gauge or heavier galvanized steel decking with up to 3½" (88mm) flute height firmly supported with min 2½" concrete cover.
3. **Firestop System, Component 1:** GRABBER CONSTRUCTION PRODUCTS INC. – GrabberGard EFC* or GrabberGard IFC* product must be installed at a minimum thickness of ½" (13mm) within the annulus on top surface of floor assembly. On 0 - ¼" (6mm) annular spaces, a ½" (13mm) diameter fillet bead must be placed around the penetrating item.
4. **Firestop System, Component 2:** Filler material, mineral rock wool insulation with a minimum density of 4-6 PCF (68 kg/m3) compressed a minimum of 25% into the annular space at a minimum depth of 2½" (61mm). Recess filler material ½" (13mm) for sealant placement.

***WH Labeled Component**

ITS Intertek Testing Services

FL0712

Grabber Construction Products
5255 Country Club Drive
Highland, Utah 84003

GrabberGard EFC
GrabberGard IFC

Design No.: JWA/PH 120-05

Single Penetrations
Horizontal (floor/ceiling)
Test Standards: ASTM E-814, UL 1479: Non-metallic open and closed systems
ULC S115-M05**: Non-metallic closed systems
Test Furnace Internal Positive Pressure Differential – 2.5 Pa (0.01 in. of water) Minimum

Penetrating Material & Size	Max Hole Size	Annular Space	Fire "F" Rating	Temp Rating "T" Rating
PVC Plastic Pipe 1-1/2" – 4"	5"	0" – 1/2"	Up to 2 Hr	Up to 2 Hr
ccPVC Plastic Pipe 1-1/2" – 4"	5'	0" – 1/2"	Up to 2 Hr	Up to 2 Hr
CPVC Plastic Pipe 1-1/2" - 4"	5"	0" – 1/2"	Up to 2 Hr	Up to 2 Hr
ccABS Plastic Pipe 1-1/2" - 4"	5"	0" – 1/2"	Up to 2 Hr	Up to 2 Hr
ABS Plastic Pipe 1-1/2" - 4"	5"	0" – 1/2"	Up to 2 Hr	Up to 2 Hr
FRPP Plastic Pipe 1-1/2" - 4"	5"	0" – 1/2"	Up to 2 Hr	Up to 2 Hr

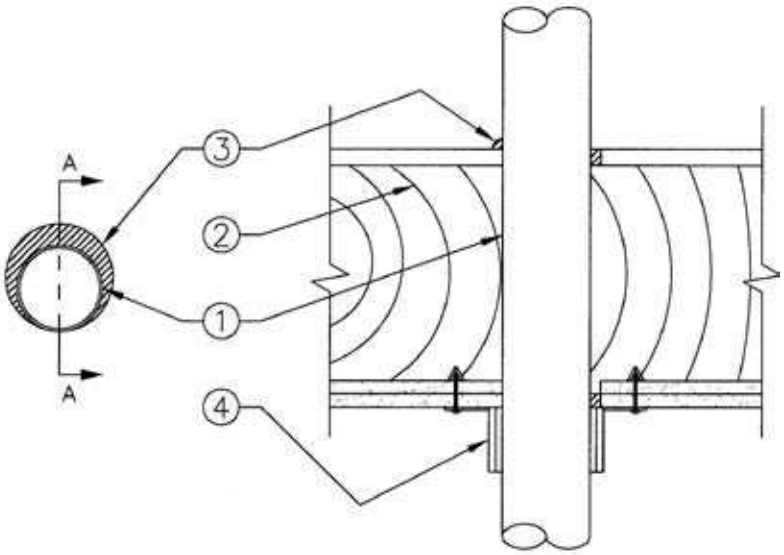

System Design Instructions

1. **Penetrating Item:** Centered or offset in hole, see table above. Single penetrations only, maximum hole size not to exceed table above.
2. **Floor/Ceiling Assembly:** 1 or 2 hour rated ASTM E-119 wood framed gypsum wallboard (GWB) floor/ceiling assemblies with or without concrete topping, minimum nominal 10" depth wood or composite wood floor joists.
3. **Firestop System, Component 1:** GRABBER CONSTRUCTION PRODUCTS INC. – GrabberGard EFC* or GrabberGard IFC* installed at a minimum thickness of 3/4" (19mm) within the annulus on top surface of floor assembly and a min of 5/8" (18mm) within the annulus of the gypsum wallboard ceiling membrane. On 0 – 1/4" (6mm) annular spaces of the floor surface, a 1/2" (13mm) diameter fillet bead must be placed around the penetrating item.
4. **Firestop System, Component 2:** PFP Partner – Plastic Pipe Collar* (PPC) specifically sized for diameter of pipe. PPC secured to floor/ceiling assembly using 1-1/2" toggle bolts over fender washers, at joist locations use 1-1/2" drywall screws to fasten collar directly to joists.

***WH Labeled Component**

**Not tested to 50 Pa pressure differential as required by Canadian code for combustible DWV (Drain, Waste or Vent) piping systems.

ITS Intertek Testing Services

FL0712

Warnock Hersey

Grabber Construction Products
5255 Country Club Drive
Highland, Utah 84003

GrabberGard EFC
GrabberGard IFC

Design No.: JWA/PH 120-06

Single Penetrations
Horizontal (floor/ceiling)
Test Standards: ASTM E-814, UL 1479: Non-metallic open and closed systems
CAN/ULC S115-M05**: Non-metallic closed systems
Test Furnace Internal Positive Pressure Differential – 2.5 Pa (0.01 in. of water) Minimum

Penetrating Material & Size	Max Hole Size	Annular Space	Fire "F" Rating	Temp Rating "T" Rating
PVC Plastic Pipe 1-1/2" - 6"	7"	1/4"	Up to 2 Hr	Up to 2 Hr
ccPVC Plastic Pipe 1-1/2" - 6"	7"	1/4"	Up to 2 Hr	Up to 2 Hr
CPVC Plastic Pipe 1-1/2" - 6"	7"	1/4"	Up to 2 Hr	Up to 2 Hr
ccABS Plastic Pipe 1-1/2" - 4"	5"	1/4"	Up to 2 Hr	Up to 2 Hr
ABS Plastic Pipe 1-1/2" - 4"	5"	1/4"	Up to 2 Hr	Up to 2 Hr
FRPP Plastic Pipe 1-1/2" - 4"	5"	1/4"	Up to 2 Hr	Up to 2 Hr

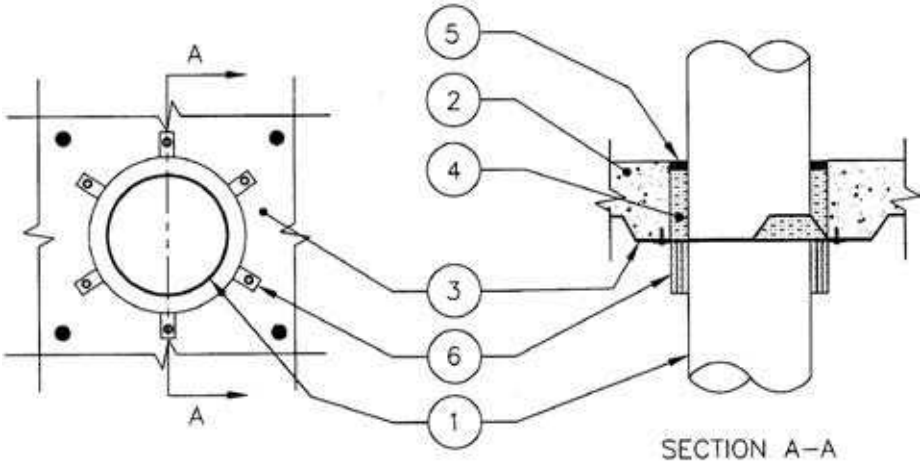

System Design Instructions

1. **Penetrating Item:** Centered in hole, see table above. Single penetrations only, maximum hole size not to exceed table above.
2. **Floor/Ceiling Assembly:** Min 20 gauge or heavier galvanized steel decking with min 2" (50mm) flute depth with min 2-1/2" concrete cover.
3. **Firestop System, Component 1:** Min 18 gauge or heavier 12"x12" steel plate. Steel plate securely fastened to underside of floor separation with concrete anchors.
4. **Firestop System, Component 2:** Filler material, mineral rock wool insulation with a minimum density of 4-6 PCF (68 kg/m3) compressed a minimum of 25% into the annular space at a minimum depth of 4" (102mm). Recess filler material 1/2" (13mm) for sealant placement.
5. **Firestop System, Component 3:** GRABBER CONSTRUCTION PRODUCTS INC. – GrabberGard EFC* or GrabberGard IFC* installed at a minimum thickness of 1/2" (13mm) within the annulus on top surface of floor assembly.
6. **Firestop System, Component 4:** PFP Partners – Plastic Pipe Collar* (PPC) specifically sized for diameter of pipe. PPC secured to floor/ceiling assembly using 1/4" diameter by 1-1/4" long steel masonry anchors over fender washers.

***WH Labeled Component**

**Not tested to 50pa pressure differential as required by Canadian code for combustible DWV (Drain, Waste or Vent) piping systems.

ITS Intertek Testing Services

FL0712

Warnock Hersey

Grabber Construction Products
5255 Country Club Drive
Highland, Utah 84003

GrabberGard EFC
GrabberGard IFC

Design No.: JWA/PH 120-07

Single Penetrations
Horizontal (floor/ceiling)
Test Standards: ASTM E-814, UL 1479, CAN/ULC S115-M05
Non-metallic open and closed systems
Positive Pressure Differential – 50 Pa (0.2 in. of water) Minimum

Penetrating Material & Size	Max Hole Size	Annular Space	ASTM E814/UL 1479 "F", "T" Rating	ULC S115-M05 "FTH Rating
PVC Plastic Pipe to 3 in.	4 in.	1/4 in.	Up to 2 hours	Up to 2 hours
ccPVC Plastic Pipe to 3 in.	4 in.	1/4 in.	Up to 2 hours	Up to 2 hours

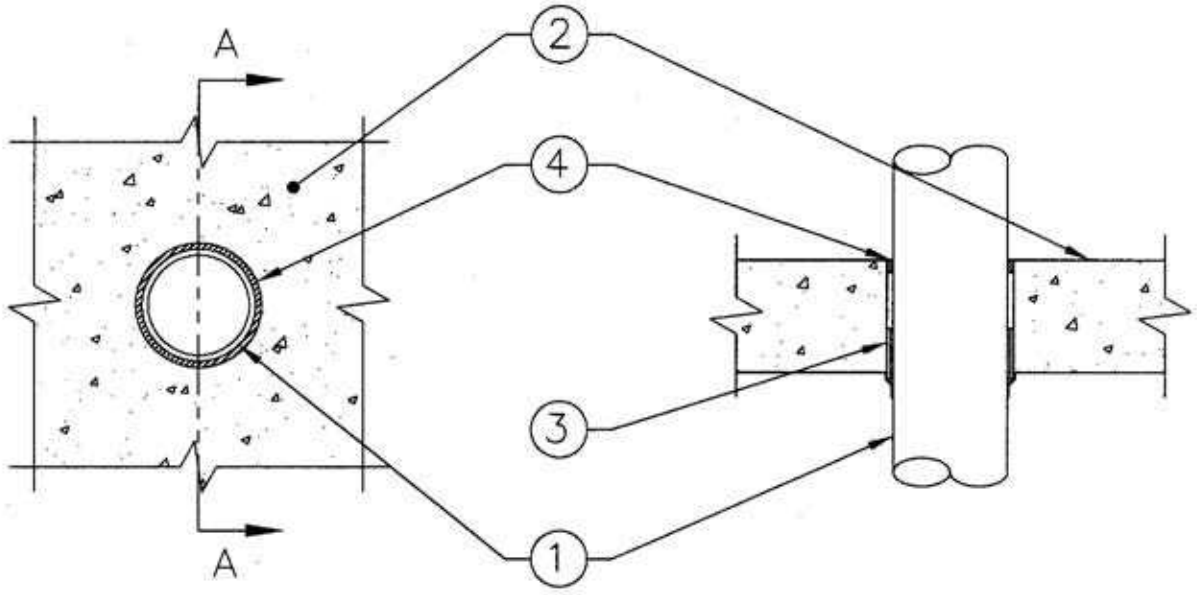

System Design Instructions

1. **Penetrating Item**:** Centered in hole, see table above. Single penetrations only, maximum hole size not to exceed table above.
2. **Floor Assembly:** Cast in place normal or light density concrete floor/ceiling assemblies having a minimum cross section thickness of 4-1/2 in. (114mm).
3. **Firestop System, Component 2:** PFP Partners – Wrap Strip WS1* – Nom. 1/8 in. thick by 2-in. wide intumescent wrap strips. Two layers of wrap strip are tightly wrapped around the pipe. Wrap strip to extend max ¼ in. past lower surface of concrete floor assembly and fastened in place with aluminum foil tape.
4. **Firestop System, Component 1:** GRABBER CONSTRUCTION PRODUCTS INC. – GrabberGard EFC* or GrabberGard IFC* caulking installed as 1/2" (13mm) thickness around the penetrating item.

***WH Labeled Component**

ITS Intertek Testing Services

FL0712

Warnock Hersey

Grabber Construction Products
5255 Country Club Drive
Highland, Utah 84003

GrabberGard EFC
GrabberGard IFC

Design No.: JWA/PH 120-08

Single Penetrations
Horizontal (floor/ceiling) or Vertical (wall)
Test Standards: ASTM E-814, UL 1479, ULC S115-M05
Non-metallic open and closed systems
Positive Pressure Differential – 50 Pa (0.2 in. of water) Minimum

Penetrating Item Material	Nom Pipe Size (in.)	Design	Annular Space (in.)	Layer of Wrap Strips	ASTM E814/UL1479		ULC S115-M05		
					"F"	"T"	"F"	"FH"`	"FT"
PVC Pipe	up to 3"	A	1/4"	2	Up to 2 Hr	2 Hr	Up to 2 Hr	2 Hr	2 Hr
ccPVC Pipe	up to 3"	A	1/4"	2	Up to 2 Hr	2 Hr	Up to 2 Hr	2 Hr	2 Hr
ABS Pipe	up to 3"	A	1/4"	2	Up to 2 Hr	2 Hr	Up to 2 Hr	2 Hr	2 Hr
Nonmetallic Rigid Conduit	up to 3"	A	1/4"	2	Up to 2 Hr	2 Hr	Up to 2 Hr	2 Hr	2 Hr
PVC Pipe	<3" to 4"	B	3/8"	2	N/A	N/A	Up to 2 Hr	N/A	2 Hr
ccPVC Pipe	<3" to 4"	B	3/8"	2	N/A	N/A	Up to 2 Hr	N/A	2 Hr
ABS Pipe	<3" to 4"	B	3/8"	2	Up to 2 Hr	15 min	Up to 2 Hr	2 Hr	15 min
Nonmetallic Rigid Conduit	<3" to 4"	B	3/8"	2	N/A	N/A	Up to 2 Hr	N/A	2 Hr

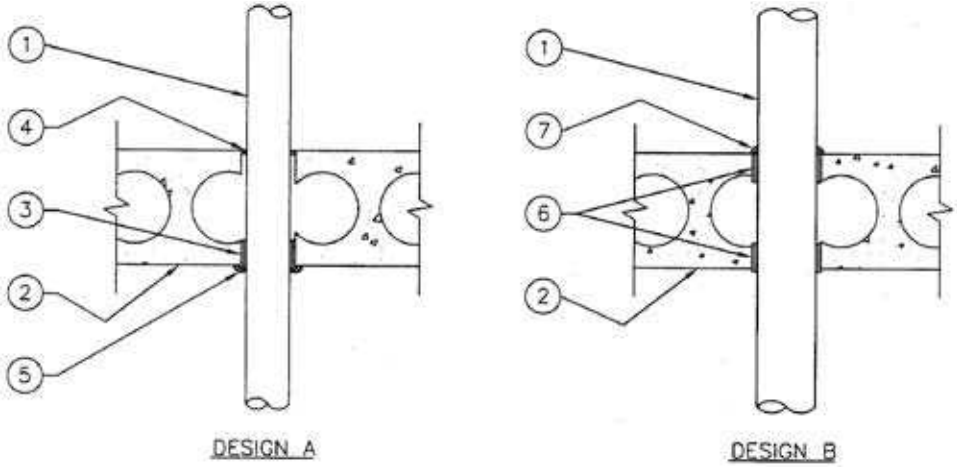

System Design Instructions

1. **Penetrating Item:** Centered in hole, see table above. Single penetrations only.
2. **Floor/Ceiling or Wall Assembly:** Hollow core pre-cast concrete floor/ceiling assembly having a min cross section thickness of 6 in. (150 mm).

Design A

3. **Firestop System Component 1:** PFP Partners – Wrap Strip WS1* – Nominal 1/8 in. thick intumescent material supplied in 2 in. (50 mm) wide strips. See table for number of layers of wrap strip friction fitted into annular space. Wrap strip to extend max. 1/4 in. (6 mm) below the bottom surface of the floor and fastened in place with aluminum tape.
4. **Firestop System Component 2:** GRABBER CONSTRUCTION PRODUCTS INC. – GrabberGard EFC* or GrabberGard IFC* installed at a minimum thickness of 1/4 in. (6 mm) within the annulus at top surface of floor assembly.
5. **Firestop System Component 3:** GRABBER CONSTRUCTION PRODUCTS INC. – GrabberGard EFC* or GrabberGard IFC* – A minimum of 1/2 in. (13 mm) bead to be applied between interface of the bottom surface of floor and the outer layer of intumescent wrap strip.

ITS Intertek Testing Services

FL0712

Grabber Construction Products
5255 Country Club Drive
Highland, Utah 84003

GrabberGard EFC
GrabberGard IFC

JWA/PH 120-08

Design B

6. **Firestop System Component 4:** PFP Partners – Wrap Strip WS1* – Nominal 1/8 in. thick intumescent material supplied in 2 in.(50 mm) wide strips. See table for number of layers of wrap strip friction fitted into annular space. Wrap strip to flush with top surface of floor and extend max. 1/4 in. (6 mm) below the bottom surface of the floor, fastened in place with aluminum tape.
7. **Firestop System Component 5:** GRABBER CONSTRUCTION PRODUCTS INC. – GrabberGard EFC* or GrabberGard IFC* minimum 1/2 in. (13 mm) bead to be applied at wrap strip/penetrant interface on top surface of floor.

***WH Labeled Component**

Warnock Hersey

Grabber Construction Products
5255 Country Club Drive
Highland, Utah 84003

GrabberGard EFC
GrabberGard IFC

Design No.: JWA/PH 120-09

Single Penetrations
Horizontal (floor/ceiling)
Test Standards: ASTM E-814, UL 1479, ULC S115-M05
Test Furnace Internal Positive Pressure Differential – 50 Pa (0.2 in. of water)

Penetrating Material & Size	Max Hole Size	Annular Space	Fire "F" Rating	Fire/Hose "FH" Rating	Temp "FTH" Rating
PVC Plastic Pipe to 102mm (4 in.) ID	127mm (5 in.)	0 – 25 mm (I in.)	2 Hours	2 Hours	2 Hours
CPVC Plastic Pipe to 102mm (4 in.) ID	127mm (5 in.)	0 – 25 mm (I in.)	2 Hours	2 Hours	2 Hours

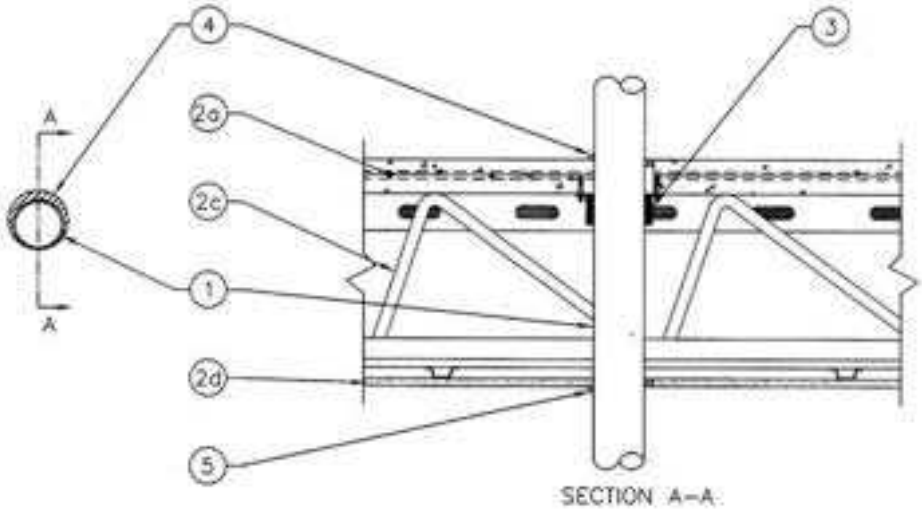

System Design Instructions

1. **Penetrating Item:** Centered or offset in hole, see table above. Single penetrations only, maximum hole size not to exceed table above.
2. **Floor/Ceiling Fire Separations:** 1, 1-1/2 or 2 hour rated CAN/ULC S101 floor/ceiling assembly consisting of:
   - **a)** Cast in place concrete floor with wire mesh reinforcement, having a total minimum thickness of 63 mm (2-1/2 in.),
   - **b)** Steel form units (Optional) – (Not shown)
   - **c)** Structural component – Steel Joist
   - **d)** Gypsum Wallboard – Min. 16 mm (5/8 in.) thick screw attached to furring channels.
3. **Firestop System, Component 1:** PFP Partners – Plastic Pipe Collar * (PPC) specifically sized for diameter of pipe. PPC secured to floor/ceiling assembly using 6mm (1/4 in.) diameter by 32mm (1-1/4 in.) long steel masonry anchors over fender washers.
4. **Firestop System, Component 2:** GRABBER CONSTRUCTION PRODUCTS INC. – GrabberGard EFC* or GrabberGard IFC* installed at a minimum thickness of 13mm (1/2 in.) within the annulus on top surface of floor assembly. On 0 – 6mm (1/4 in.) annular spaces, a 13 mm (1/2 in.) diameter fillet bead must be placed around the penetrating item.
5. **Firestop System Component 3:** GRABBER CONSTRUCTION PRODUCTS INC. – GrabberGard EFC* or GrabberGard IFC* installed at a minimum thickness of 16 mm (5/8 in.) within the annulus flush with both top and bottom surfaces of gypsum floor/ceiling assembly. On 0 – 6mm (1/4 in.) annular spaces, a 13 mm (1/2 in.) diameter fillet bead must be placed around the penetrating item.

***WH Labeled Component**

ITS Intertek Testing Services

FL0712

Grabber Construction Products
5255 Country Club Drive
Highland, Utah 84003

GrabberGard IFC

Design No.: JWA/PH 180-01

Single Penetrations
Horizontal (floor)
Test Standards: ASTM E-814, UL 1479: Non-metallic Open and Closed Systems
ULC S115-M05** Non-metallic Closed Systems
Test Furnace Internal Positive Pressure Differential – 2.5 Pa (0.01 in. of water) Minimum

Penetrating Material & Size	Max Hole Size	Annular Space	ASTM E 814/ UL 1479		ULC S115 – M05	
			"F"	"T"	"FTH"	"FH"
PVC Pipe (1" to 4")	6"	3/8" – 1-1/8"	3 Hour	121 Min.	3 Hour	121 Min.
ccPVC Pipe (1" to 4")	6"	3/8" – 1-1/8"	3 Hour	121 Min.	3 Hour	121 Min.
PVC Pipe (1" to 4")	6"	3/8" – 1-1/8"	3 Hour	121 Min.	3 Hour	121 Min.

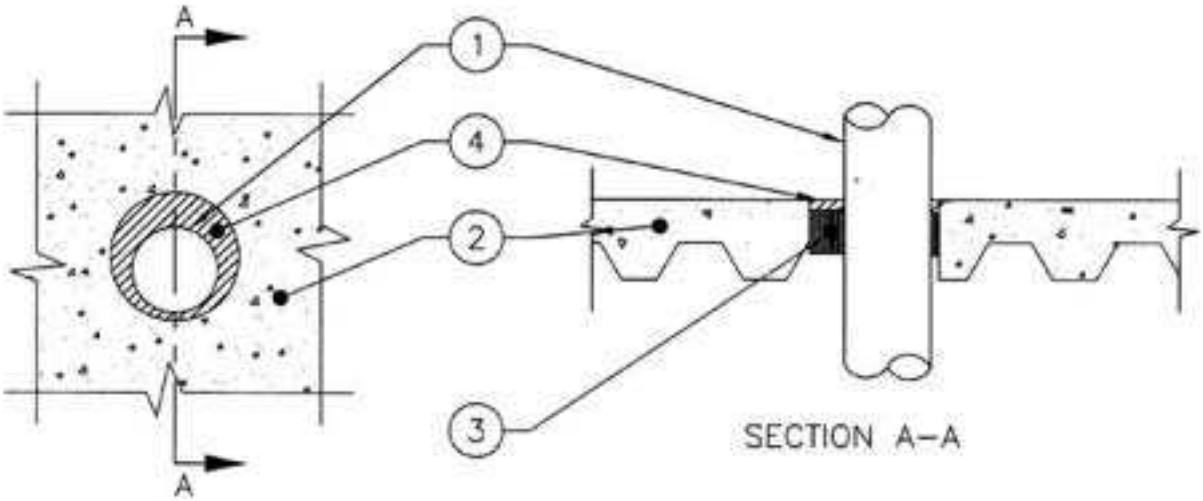

System Design Instructions

1. **Penetrating Item:** Centered or offset in hole, see table above. Single penetrations only, maximum hole size not to exceed table above.
2. **Floor/Ceiling Fire Separations:** Min 20 gauge or heavier galvanized steel decking with up to 3-1/2" (88mm) flute height firmly supported with min 2-1/2" (63 mm) concrete cover.
3. **Firestop System, Component 1:** PFP Partners – Wrap Strip WS1* – Nominal 1/8 in. thick intumescent material supplied in 2 in. (50 mm) wide strips. Min 3 layers of wrap strip to be wrapped entirely around pipe with additional wraps strips to be friction fitted to completely fill the annular space. Wrap strips to be recessed a min 1/2 in. (13 mm) below the top surface of the floor assembly to accommodate Firestop System, Component2.
4. **Firestop System, Component 2:** GRABBER CONSTRUCTION PRODUCTS INC. – GrabberGard IFC* - Product must be installed at a minimum thickness of 1/2" (13mm) within the annulus on top surface of floor assembly.

*WH Labeled Component

** Tested in accordance to Canadian Code Requirements for closed (supply) piping systems. Not tested to 50 Pa pressure differential as required by Canadian Code Requirements for combustible DWV pipes.

ITS Intertek Testing Services

FL0712

Grabber Construction Products
5255 Country Club Drive
Highland, Utah 84003

GrabberGard EFS

Design No. JWA/PHV 60-01

Metal Decking to Vertical Wall Assemblies
Test Standards: UL 2079 Rating: 1 hour "F"
Test Standards: ULC S115-M05 Rating: 1 hour "FTH"
Test Furnace Internal Positive Pressure Differential – 2.5 Pa (0.01 in. of water) Minimum
Joint System Cycled 500 Times at 10 cycles per Minute – 25% Compression or Extension

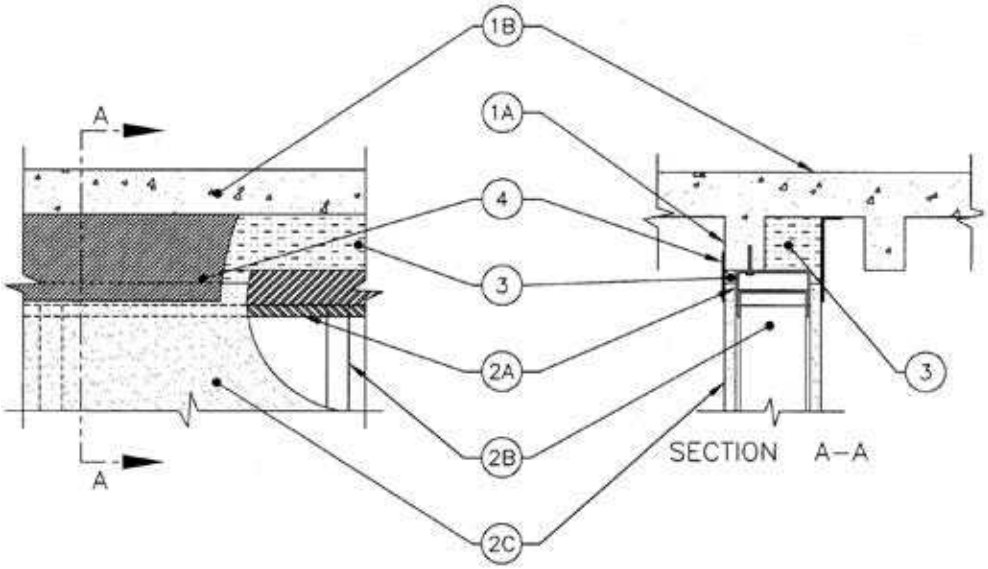

System Design Instructions

1. **Floor/Ceiling Assembly:** 1 hour ASTM E-119 or CAN/ULC S101 fluted steel deck roof/ceiling or floor/ceiling assemblies.
   - **A. Steel Deck:** Galvanized steel fluted units.
   - **B. Concrete:** Min. 2-1/2 in. (63mm) deep concrete, as measured from the top plane of the steel deck (1A).
2. **Wall Assembly:** 1 hour ASTM E-119 or ULC S101 metal framed gypsum wallboard (GWB) wall assemblies and shall include the following:
   - **A. Ceiling Runner & Deflection Channel:** 3-5/8 in. (91mm) x 1-1/2 in. (38mm) U-shaped runner with optional min. 24 Ga. with min. 2 in. (50mm) deep legs U-shaped deflection channel. When deflection channel is used, ceiling runner is installed within the deflection channel maintaining a 3/4 in. (19mm) gap between the top of the ceiling runner and top of the deflection channel and deflection channel is attached to floor/ceiling assembly. When deflection channel is not used ceiling runner is fastened directly to floor/ceiling assembly with steel fasteners or by welds spaced max. 24 in. (600mm) OC.
   - **A1.Slotted Ceiling Runner:** (As an alternative to 2A) 3-5/8 in. (91mm) U-shaped runner with slotted flanges, fastened to floor/ceiling assembly.
   - **B. Studs:** 3-5/8 in. (91mm) wide 'C' studs, spaced 24 in. (600mm), cut 1/2 in. (13mm) to 3/4 in. (19mm) less in length than assembly height.
   - **C Wallboard*:** 5/8 in. (16mm) Type X gypsum wallboard, straight cut 3/4 in. (19mm) below lower surface of floor/ceiling assembly.

The hourly F Rating of the firestop system is equal to the hourly fire rating of the wall assembly in which it is installed.

3. **Firestop System, Component 1:** Filler material- Min. 2 in. (50 mm) thick min. 4 PCF (64kg/m3) density mineral wool insulation compressed min. 25% between the top track and the underside of the top of the flute. Additional pieces of min. 5/8 in.(19 mm) thickness of min. 4 PCF (64kg/m3) density mineral wool insulation compressed min. 25% between the top of the gypsum wallboard and the underside of steel deck. Filler material to be flush with both sides of wall assembly.
4. **Firestop System, Component 2:** Min. 1/16 in. (60mil) dry thickness of GRABBER CONSTRUCTION PRODUCTS INC. – GrabberGard EFS* sprayed or brushed on each side of the wall assembly, fully covering all filler material and overlapping a min of 1 in. (25mm) onto the metal deck and wall assembly.

***WH Labeled Component**

FL0712

ITS Intertek Testing Services

Warnock Hersey

Grabber Construction Products
5255 Country Club Drive
Highland, Utah 84003

GrabberGard IFC

Design No. JWA/PHV 120-01

Single Penetrations Only
Horizontal (floor/ceiling) or Vertical (wall)
Test Standards: ASTM E-814, UL 1479: open and closed systems
ULC S115-M05: closed systems
Test Furnace Internal Positive Pressure Differential – 2.5 Pa (0.01 in. of water) Minimum

Penetrating Material & Size	Max Hole Size	Annular Space	Fire "F" Rating	Fire/Hose "FH" Rating	Temp Rating "FTH" Rating
PVC Plastic pipe to 2 in.	3 in.	1/2 in.	2 Hours	2 Hours	2 Hours
ccPVC Plastic pipe to 2 in.	3 in.	1/2 in.	2 Hours	2 Hours	2 Hours
CPVC Plastic pipe to 2 in.	3 in.	1/2 in.	2 Hours	2 Hours	2 Hours

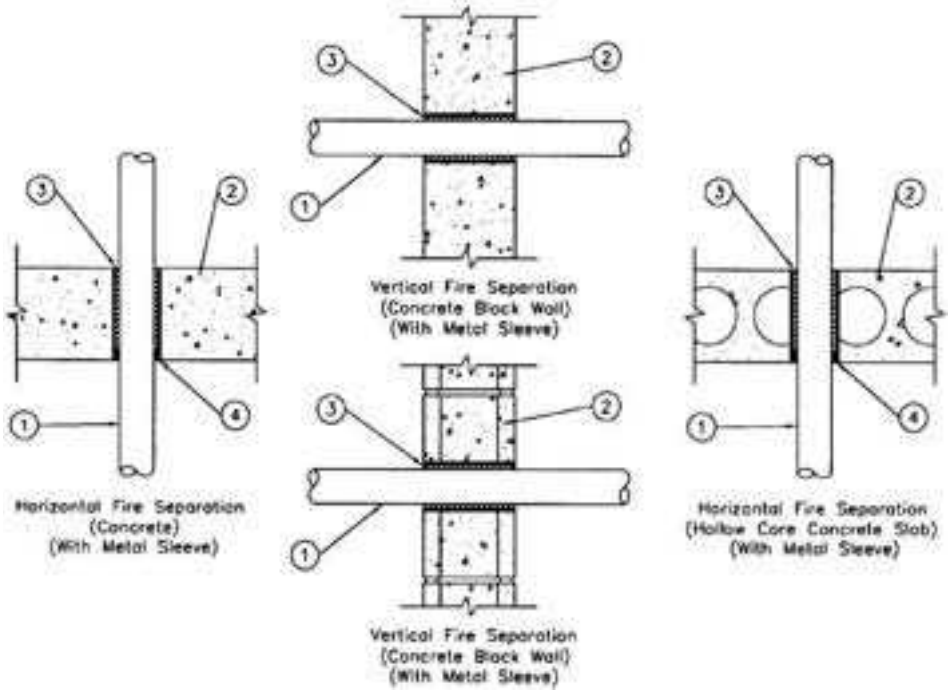

System Design Instructions

1. **Penetrating Item:** Centered in hole, see table above. Single penetrations only, maximum hole size not to exceed table above.
   a) Metal sleeve: Min 28 gauge or heavier metal sleeve cast in place or fit tightly into the opening.
2. **Floor/Ceiling Fire Separations:**
   a) Hollow core pre-cast concrete floor/ceiling assembly having a min cross-section thickness of 8 in. (200mm).
   b) Cast in place normal or light density concrete floor/ceiling assemblies having a minimum thickness of 8 in. (200mm).
   c) Cast in place concrete wall assemblies having a minimum cross section thickness of 8 in. (200mm) or,
   d) Hollow or concrete filled unit masonry (concrete block) wall assemblies laid up with mortar having a minimum cross section thickness of 8 in. (200mm).
3. **Firestop System Component 1:** GRABBER CONSTRUCTION PRODUCTS INC. – GrabberGard IFC* installed at a minimum thickness of 7 in. (175mm) within the annulus flush with both top and bottom surfaces of floor or both sides of wall assembly.
4. **Firestop System Component 2:** Filler material: Optional, for damming only, mineral fiber insulation with a minimum density of 4-6 PCF (68 kg/m3).

***WH Labeled Component**

ITS Intertek Testing Services

FL0712

Grabber Construction Products
5255 Country Club Drive
Highland, Utah 84003

Design No. JWA/PHV 120-02

Single Penetrations Only
Horizontal (floor/ceiling) or Vertical (wall)
Test Standards: ASTM E-814, UL 1479: open and closed systems
ULC S115-M05: closed systems
Test Furnace Internal Positive Pressure Differential – 2.5 Pa (0.01 in. of water) Minimum

Penetrating Material & Size	Max Hole Size	Annular Space	Fire "F" Rating	Fire/Hose "FH" Rating	Temp Rating "FTH" Rating
PVC Plastic pipe to 2 in.	3 in.	1/2 in.	2 Hours	2 Hours	2 Hours
ccPVC Plastic pipe to 2 in.	3 in.	1/2 in.	2 Hours	2 Hours	2 Hours
CPVC Plastic pipe to 2 in.	3 in.	1/2 in.	2 Hours	2 Hours	2 Hours

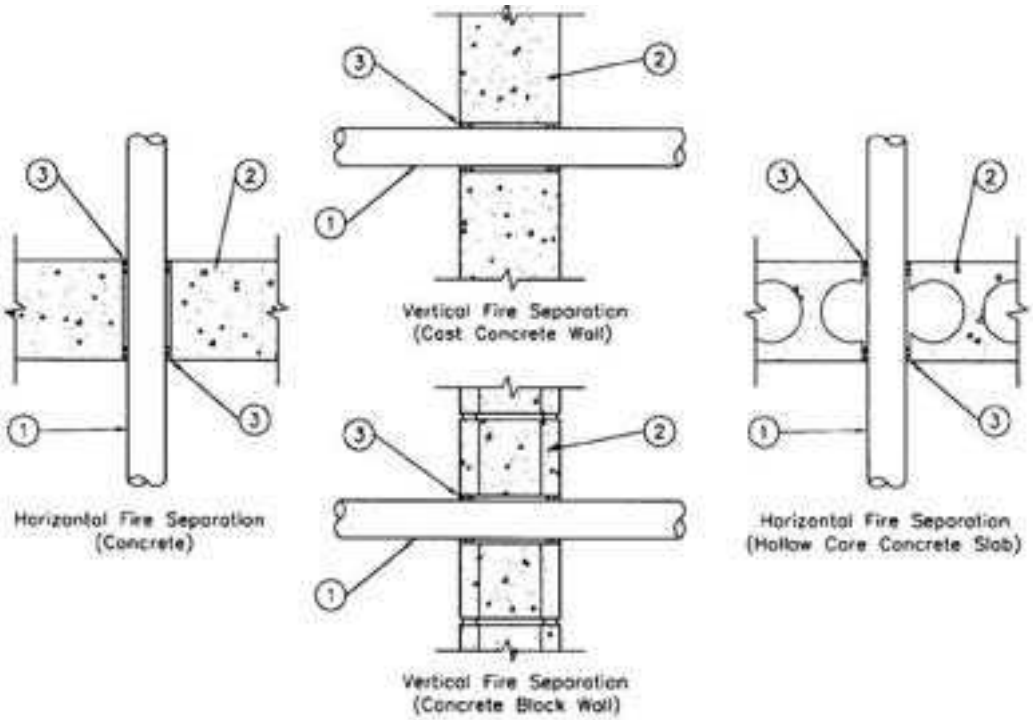

System Design Instructions

1. Penetrating Item: Centered in hole, see table above. Single penetrations only, maximum hole size not to exceed table above.

2. Floor/Ceiling Fire Separations:

   a) Hollow core pre-cast concrete floor/ceiling assembly having a min cross-section thickness of 8 in. (200mm).
   b) Cast in place normal or light density concrete floor/ceiling assemblies having a minimum thickness of 8 in. (200mm).
   c) Cast in place concrete wall assemblies having a minimum cross section thickness of 8 in. (200mm) or,
   d) Hollow or concrete filled unit masonry (concrete block) wall assemblies laid up with mortar having a minimum cross section thickness of 8 in. (200mm).

3. Firestop System: GRABBER CONSTRUCTION PRODUCTS INC. – GrabberGard IFC* installed at a minimum thickness of 1 in. (25mm) within the annulus flush with both top and bottom surfaces of floor or both sides of wall assembly.

***WH Labeled Component**

"If it's worth building, it's worth GRABBER" www.grabberman.com

Warnock Hersey

Grabber Construction Products
5255 Country Club Drive
Highland, Utah 84003

GrabberGard EFC
GrabberGard IFC
GrabberGard EFS

Design No. JWA/PHV 120-03

Metal Decking to Vertical Wall Assemblies
Rating: Up to 2 Hours "FTH"
Test Standards: ASTM E-814, UL 2079, ULC S115-M05
Test Furnace Internal Positive Pressure Differential – 2.5 Pa (0.01 in. of water) Minimum
Max Joint Width at Top of Wall – 3/4 in. (19 mm)
Joint System Cycled 500 Times at 10 Cycles Per Minute – 33% Compression or Extension

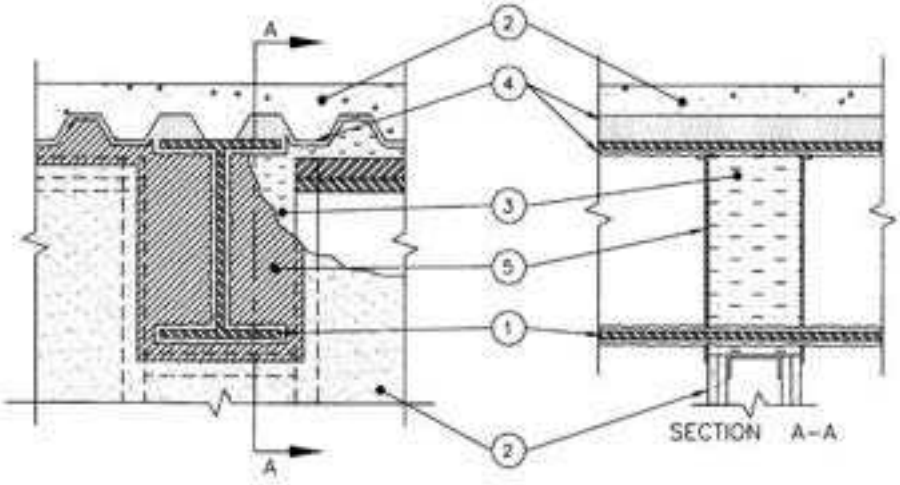

System Design Instructions

1. **Penetrating Item:** Steel beam or open-web steel joist, as specified in the individual roof/ceiling or floor/ceiling design, used to support fluted steel deck. Structural steel support oriented perpendicular to wall assembly. Where open-web steel joist pass through the fire rated wall, 3/8 in. diamond mesh expanded steel lath having a nom weight of 1.7 to 3.4 lbs per sq yd shall be secured to one side of each joist with galvanized steel tie wire and the lath shall be fully covered with spray-applied fire resistive material applied in accordance with the specifications in the individual roof/ceiling or floor/ceiling design. The clearance between the top of the gypsum board and the bottom of the spray-applied structural steel member to be 0 in. to max 3/4 in. (19 mm).

2. **Roof/Ceiling of Floor/Ceiling Fire Separation:** 1 or 2 hour ASTM E-119 or CAN/ULC S101 fluted steel deck (GWB) roof/ceiling or floor/ceiling assemblies. Wall Fire Separation: 1 or 2 hour ASTM E-119 or CAN/ULC S101 metal framed gypsum wall board (GWB) wall assemblies consisting of a single or a double top track consisting of a single top track with a deflection channel or slip track.
   The hourly rating of the joint system is equal to the lesser hourly rating of either the roof/floor/ceiling or the wall assembly.

3. **Firestop System, Component 1:** Filler material, Min 4-6 PCF (68 kg/m3) density mineral wool insulation at a min depth of 6-1/8 in. (157mm) compressed into each flute opening in the steel deck and into the framed beam opening in the wall assembly flush with both sides of the wall assembly.

4. **Firestop System, Component 2:** Cafco 300 or WR Grace Type MK-6/HY applied to the underside of the roof/ceiling or floor/ceiling assembly and all surfaces of the structural steel support. Spray-applied in accordance with the specifications in the individual roof/ceiling or floor/ceiling design.

5. **Firestop System, Component 3:**

   Method 1: Spray or Brush: One heavy coat of GRABBER CONSTRUCTION PRODUCTS INC. – GrabberGard EFS*, 1/16 in. (63 mil) dry thickness, on both sides of the assembly, fully covering all voids and overlapping a minimum of 1 in. (25mm) onto the metal deck, steel beam and wall assembly.
   Method 2: Caulk: Min 1/8 in. (3 mm) thickness of GRABBER CONSTRUCTION PRODUCTS INC. – GrabberGard EFC* or GrabberGard IFC*, applied between the gypsum wall board and spray applied fire resistance material on both sides of the assembly, fully covering all voids, and overlapping a minimum of 1/8 in. (3 mm) onto the metal deck, steel beam and wall assembly.

***WH Labeled Component**

ITS Intertek Testing Services

FL0712

Grabber Construction Products
5255 Country Club Drive
Highland, Utah 84003

GrabberGard EFC
GrabberGard IFC
GrabberGard EFS

Design No. JWA/PHV 120-04

**Fire Rated Non-Flammable Acoustic Firestop Sealant
Horizontal or Vertical (floor/ceiling and walls)
Test Standards: ASTM E-814, UL 1479, ULC S115-M05
Test Furnace Internal Positive Pressure Differential – 2.5 Pa (0.01 in. of water) Minimum

ASTM E-814		ULC S115
"F" Rating	"T" Rating	"FTH" Rating
2 Hour	2 Hour	2 Hour

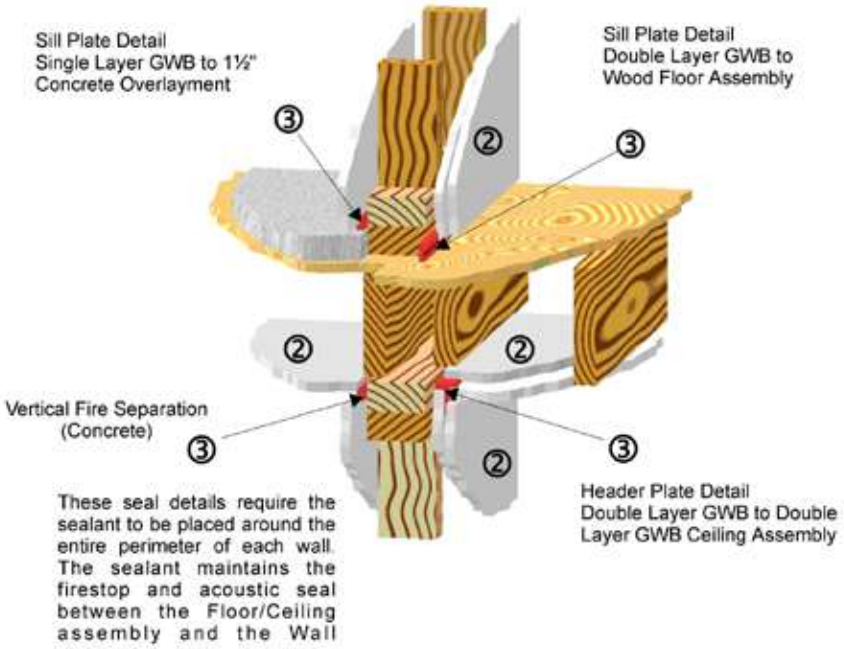

System Design Instructions

1. **Penetrating Item:** Not applicable.
2. **Floor/Ceiling or Wall Fire Separations:** 1 and 2 hour rated ASTM E-119 or CAN/ULC S101 concrete, metal or wood framed fire rated gypsum wall board (GWB) floor/ceiling/wall assemblies.
3. **Firestop System Component 1:** GRABBER CONSTRUCTION PRODUCTS INC. – GrabberGard EFC* or GrabberGard IFC* firestop sealant at a minimum bead diameter of 3/8" (10mm) caulked into the corner and behind the GWB around the entire perimeter of the fire rated wall assembly. Attach gypsum wall board (GWB) membranes into the sealant within 15 min of sealant placement or prior to sealant skinning.
4. **Firestop System Component 2:** Filler material not required.

Optional - When max separation between bottom of ceiling membrane and wall membrane is less than 1/16 of an inch.

5. **Firestop System Component 3:** GRABBER CONSTRUCTION PRODUCTS INC. – GrabberGard EFS* firestop spray applied a minimum dry thickness of 1/16 in. (2mm) sprayed into the corner and behind the GWB around the entire perimeter of the fire rated wall assembly. Attach gypsum wall board (GWB) membranes into the sealant within 15 min of sealant placement or prior to sealant skinning

***WH Labeled Component**

**The acoustic claims have not been verified by Intertek Testing Services

FL0712

Warnock Hersey

Grabber Construction Products
5255 Country Club Drive
Highland, Utah 84003

GrabberGard EFC
GrabberGard IFC
GrabberGard EFS

Design No. JWA/PHV 120-05

Horizontal or Vertical (floor/ceiling and walls)
Test Standards: ASTM E-814, UL 1479, ULC S115-M05
Test Furnace Internal Positive Pressure Differential – 2.5 Pa (0.01 in. of water) Minimum

Maximum	ASTM E814/UL 1479		ULC S115-M05
Opening	"F" Rating	"T" Rating	"FTH" Rating
8 in.	Up to 2 hours	Up to 2 Hours	Up to 2 Hours

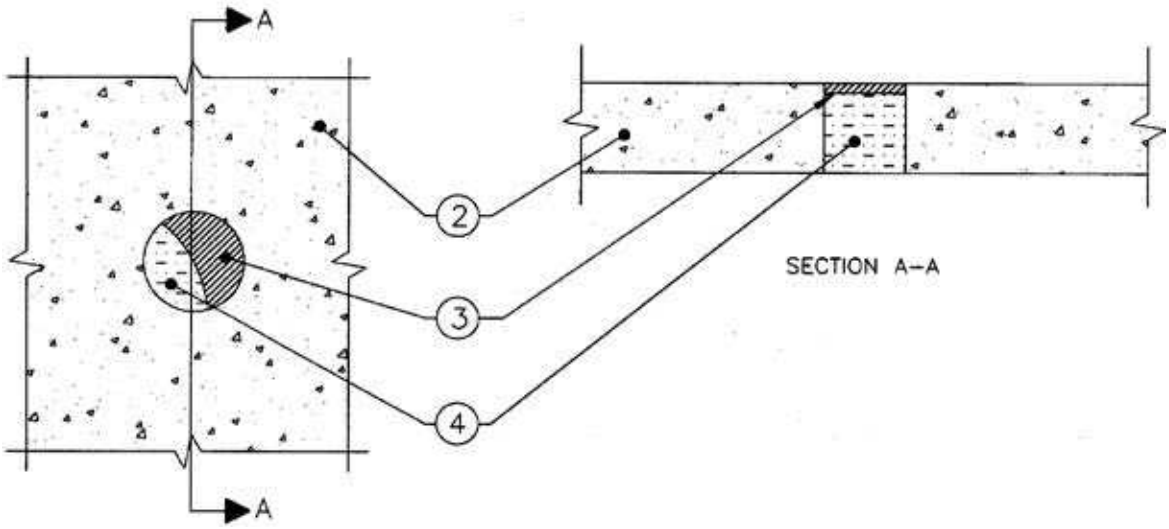

System Design Instructions

1. **Penetrating Item:** None.

2. **Floor/Ceiling Assemblies:**

   a) Cast in place normal or light density concrete floor/ceiling assemblies having a minimum cross section thickness of 4 ½ in. (114mm).
   b) Cast in place concrete wall assemblies having a minimum cross section thickness of 6 in. (150mm) or;
   c) Hollow or Concrete filled unit masonry (concrete block) wall assemblies laid up with mortar having a minimum cross section thickness of 8 in. (200mm).

3. **Firestop System Component 1:**

   GRABBER CONSTRUCTION PRODUCTS INC. – GrabberGard EFC* or GrabberGard IFC* for vertical or horizontal applications. GrabberGard EFC* or GrabberGard IFC* must be installed at a minimum thickness of ½ in. (13 mm) on top surface of floor or both surfaces of wall.
   GRABBER CONSTRUCTION PRODUCTS INC. – GabberGard EFS* (sprayable mastic) for vertical or horizontal applications. GrabberGard EFS* to be sprayed into place with a minimum wet film thickness of ¼ in. (6 mm) on top surface of floor or both surfaces of wall. Do not thin GrabberGard EFS* firestop mastic when spraying, use equipment capable of applying material as supplied.

4. **Firestop System Component 2:** Filler Material, mineral rock wool or ceramic fiber insulation with a minimum density of 4-6 PCF (68 kg/m3) compressed to a minimum of 30% into the annular space at a minimum depth of 4 in. (100mm). Recess filler material ½ in. (13mm) for GrabberGard EFC* or GrabberGard IFC* caulk placement. Recess filler material ¼ in. (6mm) for GrabberGard EFS* spray applications.

***WH Labeled Component**

ITS Intertek Testing Services

FL0712

Warnock Hersey

Grabber Construction Products
5255 Country Club Drive
Highland, Utah 84003

GrabberGard EFC
GrabberGard IFC
GrabberGard EFS

Design No. JWA/PHV 120-06

Single and Multiple Penetrations
Horizontal or Vertical (floor/ceiling and walls)
Test Standards: ASTM E-814, UL 1479, CAN/ULC S115-M05
Test Furnace Internal Positive Pressure Differential – 2.5 Pa (0.01 in. of water) Minimum

Configuration 1

Penetrating Material & Size	Annular Space	ASTM E814 & UL 1479		CAN/ULC S115-M05		
		Fire "F" Rating	Temp "T" Rating	Fire "F" Rating	Fire/Hose "FH" Rating	Temp Rating "FTH" Rating
EMT/Steel Conduit and Pipe (1/2 to 1) Sch 10 & up	0" - 3"	Up to 2 Hour	90 Min	Up to 2 Hour	Up to 2 Hour	90 Min
EMT/Steel Conduit and Pipe (1-1/4 to 6) Sch 40	0" - 3"	Up to 2 Hour	25 Min	Up to 2 Hour	Up to 2 Hour	25 Min
Copper Pipe and Tubing up to 2" ID	0" - 3"	Up to 2 Hour	55 Min	Up to 2 Hour	Up to 2 Hour	55 Min
Multple BX/Teck Cable to 3-3/8 OD	0" - 3"	Up to 2 Hour	45 Min	Up to 2 Hour	Up to 2 Hour	45 Min

Configuration 2

L Rating At Ambient – 7.1 CFM
L Rating At 400° F – 5.8 CFM

Penetrating Material & Size	Annular Space	ASTM E814 & UL 1479		CAN/ULC S115-M05		
		Fire "F" Rating	Temp "T" Rating	Fire "F" Rating	Fire/Hose "FH" Rating	Temp Rating "FTH" Rating
Cable Trays	See Item 1	Up to 2 Hour	15 Min	Up to 2 Hour	Up to 2 Hour	15 Min
EMT/Steel Conduit and Pipe (1/2 to 4) Sch 10 & up	See Item 1	Up to 2 Hour	15 Min	Up to 2 Hour	Up to 2 Hour	15 Min
EMT/ Flexible Steel Conduit (1/2 to 4)	See Item 1	Up to 2 Hour	15 Min	Up to 2 Hour	Up to 2 Hour	15 Min
Insulated Copper Pipe and Tubing up to 4" ID	See Item 1	Up to 2 Hour	90 Min	Up to 2 Hour	Up to 2 Hour	90 Min
Multple BX/Teck Cable to 3-3/8 OD	See Item 1	Up to 2 Hour	15 Min	Up to 2 Hour	Up to 2 Hour	15 Min

Configuration 1

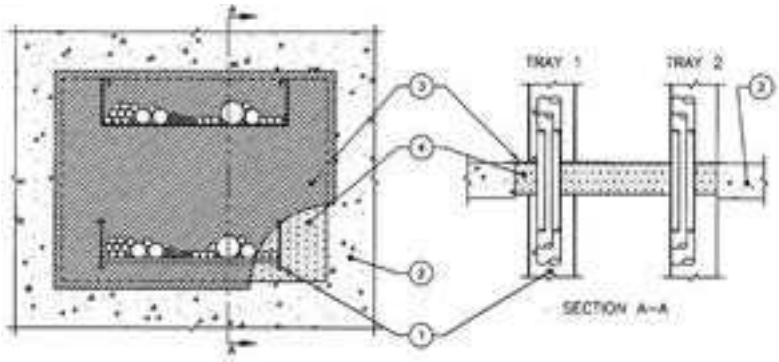

Configuration 2

ITS Intertek Testing Services

FL0712

Grabber Construction Products
5255 Country Club Drive
Highland, Utah 84003

GrabberGard EFC
GrabberGard IFC
GrabberGard EFS

JWA/PHV 120-06

System Design Instructions

Configuration 1

1. **Penetrating Item:**
   - **a)** Steel cable tray 4 in. x 30 in. (100 x 750 mm) filled to a maximum of 50% with any of the items in the table above or,
   - **b)** Bundled cables, tubing, conduits and pipes listed in table above installed within the opening such that aggregate cross sectional area of penetrants in the opening is max 58 percent of the cross sectional area of the opening in assembly. The annular space between penetrants and the periphery of the opening are to be min 0 in. (point contact) to max 3 in. (75 mm).
   - **c)** The maximum opening is 480 in2 (0.31 m2). All penetrating items must be reliably supported.

2. **Floor/Ceiling or Wall Assemblies:** 1 and 2 hour rated ASTM E-119 or CAN/ULC S101 wall or floor/ceiling assemblies as follows:
   - **a)** Metal or wood framed gypsum wall board (GWB) wall assemblies with opening within the wall assembly completely framed to form a rectangular box or;
   - **b)** Cast in place normal or light density concrete floor/ceiling assemblies having a minimum cross section thickness of 4-1/2 in. (112mm) or;
   - **c)** Cast in place concrete wall assemblies having a minimum cross section thickness of 6 in. (150mm) or;
   - **d)** Hollow or concrete filled unit masonry (concrete block) wall assemblies laid up with mortar having a minimum cross section thickness of 8 in. (200mm).
3. **Firestop System Component 1:** GRABBER CONSTRUCTION PRODUCTS INC. –
   - **a)** GrabberGard EFC* or GrabberGard IFC* for vertical or horizontal applications. Each product must be installed at a minimum wet film thickness of 1/4 in. (6mm).
   - **b)** GrabberGard EFS* (mastic) for vertical or horizontal applications sprayed into place with a minimum wet film thickness of 1/8 in. (3mm). Always overlap GrabberGard EFS* onto the surface of the substrate a minimum of 1/2 in. (13mm). Do not thin GrabberGard EFS* firestop mastic when spraying, use equipment capable of applying material as supplied.

4. **Firestop System Component 2:** Filler Material, mineral rock wool or ceramic fiber insulation with a minimum density of 4-6 PCF (68 kg/m3) compressed a minimum of 25% into the annular space at a minimum depth of 4 in. (100 mm). Recess filler material 1/4 in. (6mm) for GrabberGard EFC* or GrabberGard IFC* sealant placement. Do not recess filler material for GrabberGard EFS* applications.

Grabber Construction Products
5255 Country Club Drive
Highland, Utah 84003

GrabberGard EFC
GrabberGard IFC
GrabberGard EFS

JWA/PHV 120-06

Configuration 2

1) **Penetrating Item:**

a) Cable Tray: Maximum 2 cable trays per opening. Maximum 24 in. wide by 6 in. steel, aluminum or stainless steel cable tray solid back or ladder type. Cable tray spacing to be minimum 6 in. to a maximum 11 in. apart. The cable trays are to be installed a minimum of 0 in. (point contact) to max 6 in. from the periphery of the opening. Maximum cable tray fill to be 40% by area. All penetrating items must be reliably supported. Cable trays to may be filled with any combination of the following:

- **Cables:** Communication or power cables, single or in bundles and installed with rigid support on both sides of opening.
- **Steel Conduit / EMT:** Nominal 4 in. diameter or smaller flexible steel or steel tubing. Steel conduit or EMT to be installed with such that a min 1/2 in. annular space is maintained between steel conduit/EMT and other penetrants.
- **Insulated Metallic Pipes:** Maximum 4 in. diameter (or smaller) copper piping or tubing. Pipes to be insulated with nominal 1 in. thick mineral wool pipe insulation.

2) **Floor/Ceiling or Wall Assemblies:** 1 and 2 hour rated ASTM E-119 or CAN/ULC S101 wall or floor/ceiling assemblies having a maximum opening size 884 sq. in. with max dimension of 34 in. as follows:

a) Cast in place normal or light density concrete floor/ceiling assemblies having a minimum cross section thickness of 4-1/2 in. (112mm) or;
b) Cast in place concrete wall assemblies having a minimum cross section thickness of 6 in. (150mm) or;
c) Hollow or concrete filled unit masonry (concrete block) wall assemblies laid up with mortar having a minimum cross section thickness of 8 in. (200mm).

3) **Firestop System Component 1:** GRABBER CONSTRUCTION PRODUCTS INC. –

a) GarbberGard EFC* or GrabberGard IFC* for vertical or horizontal applications. Each product must be installed at a minimum wet film thickness of 1/4 in. (6mm).
b) GrabberGard EFS* (mastic) for vertical or horizontal applications sprayed into place with a minimum wet film thickness of 1/8 in. (3mm). Always overlap GrabberGard EFS* onto the surface of the substrate a minimum of 1/2 in. (13mm). Do not thin GrabberGard EFS* firestop mastic when spraying, use equipment capable of applying material as supplied.

4) **Firestop System Component 2:** Filler Material, mineral rock wool or ceramic fiber insulation with a minimum density of 4-6 PCF (68 kg/m3) compressed a minimum of 25% into the annular space at a minimum depth of 4 in. (100 mm). Recess filler material 1/4 in. (6mm) for GrabberGard EFC* or GrabberGard IFC* sealant placement. Do not recess filler material for GrabberGard EFS* applications.

***WH Labeled Component**

Warnock Hersey

Grabber Construction Products
5255 Country Club Drive
Highland, Utah 84003

GrabberGard EFC
GrabberGard IFC
GrabberGard EFS

Design No. JWA/PHV 120-07

Horizontal or Vertical Static Stair Joints
Test Standards: UL 2079, ULC S115-M05
Test Furnace Internal Positive Pressure Differential – 2.5 Pa (0.01 in. of water) Minimum

Configuration 1

Penetrating Material & Size	Max Width	UL 2079 "F" Rating	ULC S115-M05 "FTH" Rating
Vertical and Horizontal Joints	2 in.	Up to 2 Hours	Up to 2 Hours

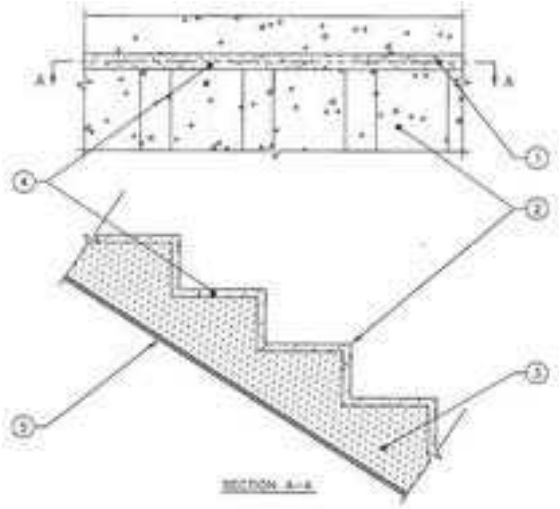

Configuration 2

Penetrating Material & Size	Max Width	UL 2079 "F" Rating	ULC S115-M05 "FTH" Rating
Vertical and Horizontal Joints	2 in.	Up to 2 Hours	Up to 2 Hours

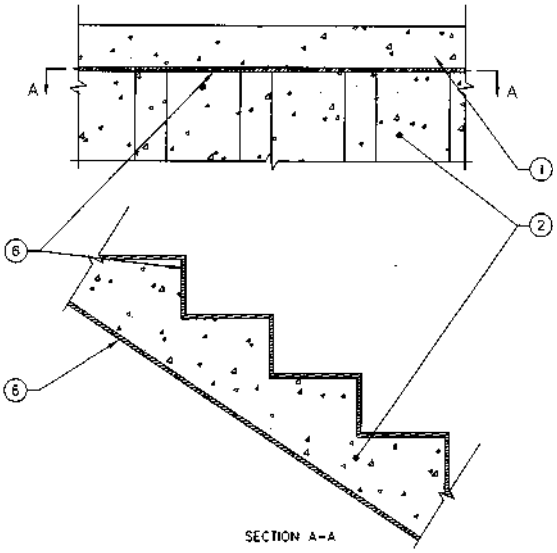

ITS Intertek Testing Services

FL0712

Grabber Construction Products
5255 Country Club Drive
Highland, Utah 84003

GrabberGard EFC
GrabberGard IFC

JWA/PHV 120-07

System Design Instructions

1. **Wall Assemblies:** ASTM E-119 and CAN/ULC S101 up to 2 hour fire rated wall assemblies as follows:
   - **a)** Cast in place concrete wall assemblies having a minimum cross section thickness of 5 in. (125mm) or;
   - **b)** Hollow or concrete filled unit masonry concrete block) wall assemblies laid up with mortar having a minimum cross section thickness of 8 in. (200mm).
2. **Concrete Stair Assemblies:** Min 2 hour fire-rated concrete stair assembly having a min thickness of 6-1/2 in.

Configuration 1

3. **Firestop System Component 1:** Filler material mineral rock wool or ceramic fiber insulation with a minimum density of 4-6 PCF (68 kg/m3) compressed a minimum of 25% into the joint space at a minimum depth of 5 in. (120 mm). Recess filler material to accommodate for grout (Item 4) placement on top side of staircase. Recess filler material to accommodate sealant placement (Item 5) placement on underside of staircase.
4. **Firestop System Component 2:** Min. 1 in. (25 mm) thick cementitious grout installed into joint on topside of staircase assembly.
5. **Firestop System Component 3:** GRABBER CONSTRUCTION PRODUCTS INC. – GrabberGard EFC* or GrabberGard IFC* for vertical or horizontal applications installed at a minimum thickness of 1/2 in (12mm) into joint on underside of staircase assembly.

Configuration 2

6. **Firestop System Component 1:** GRABBER CONSTRUCTION PRODUCTS INC. – GrabberGard EFC* or GrabberGard IFC* for vertical or horizontal applications installed at a minimum thickness of 1/2 in (12mm) into joint on top and underside of staircase assembly.

***WH Labeled Component**

Warnock Hersey

Grabber Construction Products
5255 Country Club Drive
Highland, Utah 84003

GrabberGard EFC
GrabberGard IFC

Design No. JWA/PHV 120-08

Single Penetrations
Horizontal or Vertical (floor/ceiling and walls)
Test Standards: ASTM E-814, UL 1479, ULC S115-M05
Test Furnace Internal Positive Pressure Differential – 2.5 Pa (0.01 in. of water) Minimum

Penetrating Material and Size	Max Hole Size	Annular Space	ASTM E814 / UL 1479		ULC S115-M05
			"F" Rating	"T" Rating	"FTH" Rating
Steel Pipe Sch 40 (or heavier) up to 4"	5"	0" – 1"	2 hours	2 hours	2 hours
Cast Iron Pipe Sch 40 (or heavier) up to 4 " Produced by Canadian Foundry Association Member Companies	5"	0" – 1"	2 hours	2 hours	2 hours

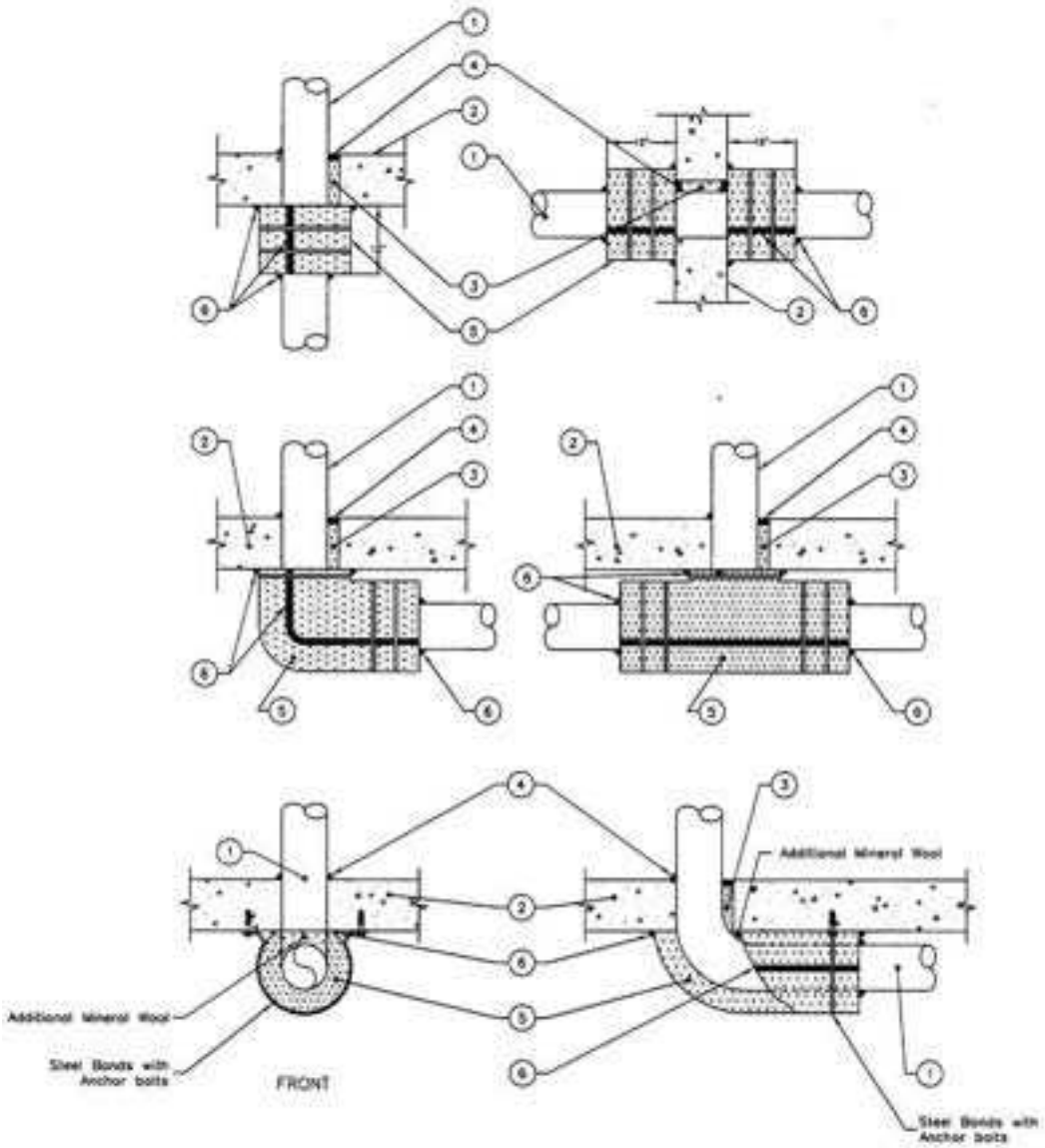

JWA/PHV 120-08

ITS Intertek Testing Services

FL0712

Grabber Construction Products
5255 Country Club Drive
Highland, Utah 84003

GrabberGard EFC
GrabberGard IFC

System Design Instructions

1. **Penetrating Item:** Centered or offset in hole, see table above. Single penetrations only, maximum hole size not to exceed table above. Penetrating item may be connected to an elbow, coupler or tee fitting below slab.

2. **Floor/Ceiling or Wall Fire Separation:** Fire rated ASTM E-119 and CAN/ULC S101 floor/ceiling/wall assemblies as following:
   a) Cast in place normal or lightweight density concrete floor/ceiling assembly having a minimum cross section thickness of 7 in. (179 mm);
   b) Cast in place concrete wall assembly having a minimum cross section thickness of 7 in. (179 mm) or;
   c) Concrete block wall assembly solidly filled with cementitous grout having a minimum cross section of 8 in. (200 mm).

3. **Firestop System, Component 1:** Filler material, mineral rock wool insulation with a minimum density of 4-6 PCF (68 kg/m3) compressed a minimum of 25% into the annular space at a minimum depth of 6 in. (150 mm). Recess filler material 1/2 in. (13 mm) from top surface of floor and both sides of wall assembly for sealant placement.

4. **Firestop System, Component 2:** GRABBER CONSTRUCTION PRODUCTS INC.– GrabberGard EFC* or GrabberGard IFC* to be installed at a minimum thickness of 1/2 in. (13 mm) within the annulus on top surface of floor or both surfaces of wall assembly. On 0 – 1/4 in. (6 mm) annular spaces, a 1/2 in. (13 mm) diameter fillet bead must be placed around the penetrating item on top surface of floor or both surfaces of wall assembly.

5. **Firestop System, Component 3:** Sleeve, min 2 in. thick by min 12 in. (306 mm) long mineral rock wool insulation with a minimum density of 4-6 PCF (68 kg/m3) installed around penetrating item. Sleeve to be held in place with steel hose clamps spaced min 6 in. (153 mm) OC and butted to the underside of the concrete floor or both surfaces of wall assembly. If pipe is connected to a elbow or tee under slab that is closer than 2" (50 mm) below slab, mineral wool may be fastened to underside of slab. If concrete slab is greater than 7" (180 mm) in thickness, the 12" (305 mm) length of insulation may be reduced by the value of that slab exceeds 7" (180 mm) in thickness.

6. **Firestop System, Component 4:** GRABBER CONSTRUCTION PRODUCTS INC. – GrabberGard EFC* or GrabberGard IFC* min 1/2 in. (13 mm) diam bead applied at sleeve/concrete and sleeve/penetrant interface. An additional 1/16 in. (1-1/2 mm) thickness by 1/2 in. (13 mm) wide layer to be applied along seam of sleeve.

***WH Labeled Component**

ITS Intertek Testing Services

Warnock Hersey

Grabber Construction Products
5255 Country Club Drive
Highland, Utah 84003

GrabberGard EFC
GrabberGard IFC
GrabberGard EFS

Design No. JWA/PHV 120-09

Single and Multiple Penetrations
Horizontal or Vertical (floor/ceiling and walls)
Test Standards: ASTM E-814, UL 1479, ULC S115-M05
Test Furnace Internal Positive Pressure Differential – 2.5 Pa (0.01 in. of water) Minimum

Penetrating Material & Size	Max Hole Size	Annular Space	ASTM E 814/UL 1479		ULC S115 M05	
			"F" Rating	"T" Rating	"FH" Rating	"FTH" Rating
Steel and Cast Iron Pipe (1" to 3") Sch 10 & up	11"	¼" - 4"	2 Hour	35 Min	2 Hour	35 Min
Steel and Cast Iron Pipe (3½" to 8") Sch 10 & up	16"	¼" - 4"	2 Hour	19 Min	2 Hour	19 Min
Steel and Cast Iron Pipe (8½" to 24") Sch 10 & up	26"	¼" - 1"	2 Hour	15 Min	2 Hour	15 Min
EMT/Steel Conduit Pipe (½" to 1") Sch 10 & up	9"	¼" - 4"	2 Hour	60 Min	2 Hour	60 Min
EMT/Steel Conduit Pipe (1¼" to 6") Sch 10 & up	8"	¼" - 1"	2 Hour	15 Min	2 Hour	15 Min
Copper Pipe and Tubing up to 4" ID	12"	¼" - 4"	2 Hour	50 Min	2 Hour	50 Min
BX/Teck Cables up to 3-3/8" OD (Plastic Jacket)	7"	¼" - 2½"	2 Hour	2 Hour	2 Hour	2 Hour
Loomex/Romex Electrical Wiring to 1½"	6½"	¼" - 2½"	2 Hour	2 Hour	2 Hour	2 Hour
25Pr Telephone Cable (Plastic Jacket)	4"	1/8" - 1"	2 Hour	2 Hour	2 Hour	2 Hour
5/16" OD Cablevision Wire (Plastic Jacket)	4"	1/8" - 1"	2 Hour	2 Hour	2 Hour	2 Hour

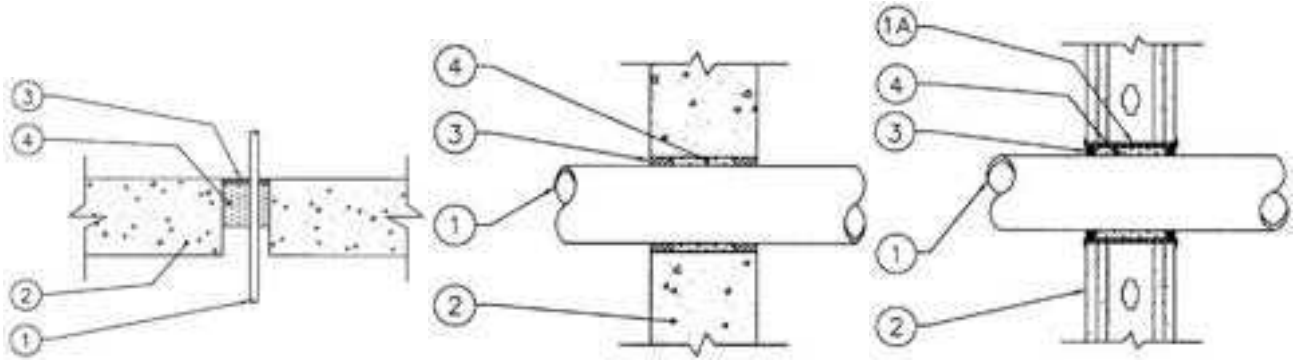

System Design Instructions

1. **Penetrating Item:** Centered or offset in hole, see table above. Single penetrations for steel pipes 6" to 16" (150 to 400mm), up to 5 penetrations for steel pipe, conduit or electrical wiring 1" (25mm) or less in diameter, up to 3 penetrations for copper pipe when 2 are ½" (13mm) or less. Steel pipes over 8" (200mm) in diameter, require ceramic fiber filler material (Item 4).
   - **a) Metal Sleeve:** Minimum 28 Ga or heavier metal sleeve fit tightly into the opening with a maximum annular space around sleeve to GWB of 1/16" (1.5mm). Metal sleeve used to support mineral wool filler material (Item 4) within hollow cavities.
2. **Floor/Ceiling or Wall Fire Separations:**
   - **a)** 1 and 2 hour rated ASTM E-119 or CAN/ULC S101 metal or wood framed fire rated gypsum wallboard (GWB) wall assemblies. (Note all GWB assemblies require metal sleeves when using 4100NS*)
   - **b)** Cast in place normal or light density concrete floor/ceiling assemblies minimum thickness of 4½" (114mm) or;
   - **c)** Cast in place concrete wall assemblies having a minimum cross section thickness of 6" (150mm) or;
   - **d)** Hollow or concrete filled unit masonry (concrete block) wall assemblies laid up with mortar having a minimum cross section thickness of 8" (200mm).

ITS Intertek Testing Services

FL0712

Grabber Construction Products
5255 Country Club Drive
Highland, Utah 84003

GrabberGard EFC
GrabberGard IFC
GrabberGard EFS

JWA/PHV 120-09

3. **Firestop System Component1:** GRABBER CONSTRUCTION PRODUCTS INC. –
   - **a)** GrabberGard EFC* or GrabberGard IFC* for vertical or horizontal applications. GrabberGard EFC* or GrabberGard IFC* must be installed at a minimum wet film thickness of 1/4 in. (6mm).
   - **b)** GrabberGard EFS* (mastic) for vertical or horizontal applications sprayed into place with a minimum wet film thickness of 1/8 in. (3mm). Always overlap GrabberGard EFS* onto the surface of the substrate a minimum of 1/2 in. (13mm). Do not thin GrabberGard EFS* firestop mastic when spraying, use equipment capable of applying material as supplied.
4. **Firestop System Component 2:** Filler Material, mineral rock wool or ceramic fiber insulation with a minimum density of 4-6 PCF (68 kg/m3) compressed a minimum of 25% into the annular space at a minimum depth of 4 in. (100 mm). Recess filler material 1/4 in. (6mm) for GrabberGard EFC* or GrabberGard IFC* sealant placement. Do not recess filler material for GrabberGard EFS* applications. On GWB and metal sleeve installations fill to full depth of sleeve allowing ¼" (6mm) for sealant placement on each side.

***WH Labeled Component**

Warnock Hersey

Grabber Construction Products
5255 Country Club Drive
Highland, Utah 84003

GrabberGard EFC
GrabberGard IFC

Design No. JWA/PHV 120-10

Single Penetrations
Horizontal (floor/ceiling) or Vertical (walls)
Test Standards: ASTM E-814, UL 1479, ULC S115-M05
Test Furnace Internal Positive Pressure Differential – 2.5 Pa (0.01 in. of water) Minimum

Penetrating Material and Size	Max Hole Size	Annular Space	ASTM E814 / UL 1479		ULC S115-M05
			"F" Rating	"T" Rating	"FTH" Rating
Copper Pipe or Tubing up to 4"	5"	0" – 1"	2 hours	2 hours	2 hours
Rigid Steel Conduit or EMT up to 4"	5"	0" – 1"	2 hours	2 hours	2 hours

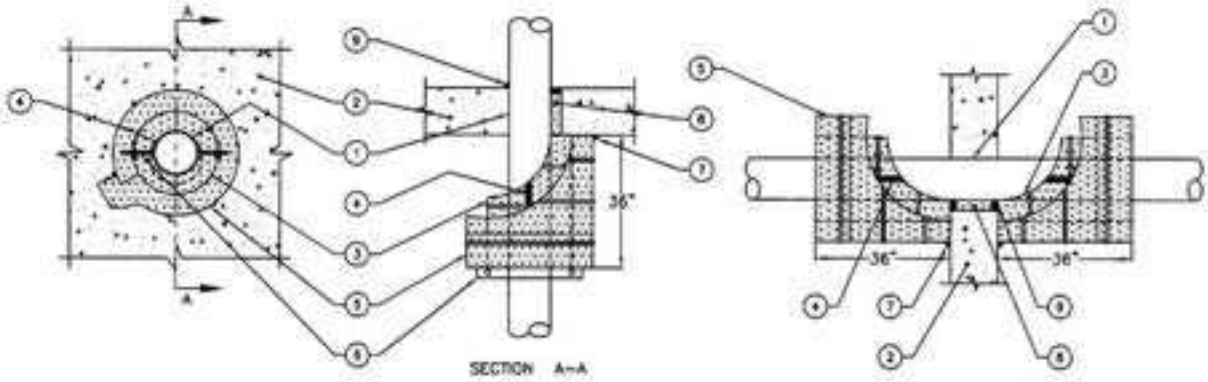

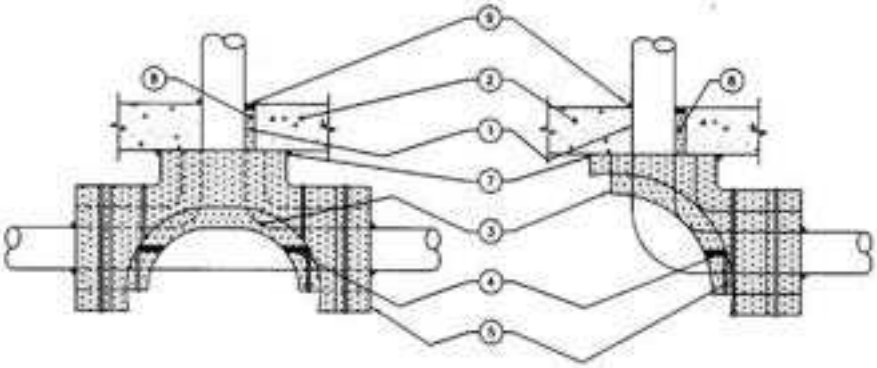

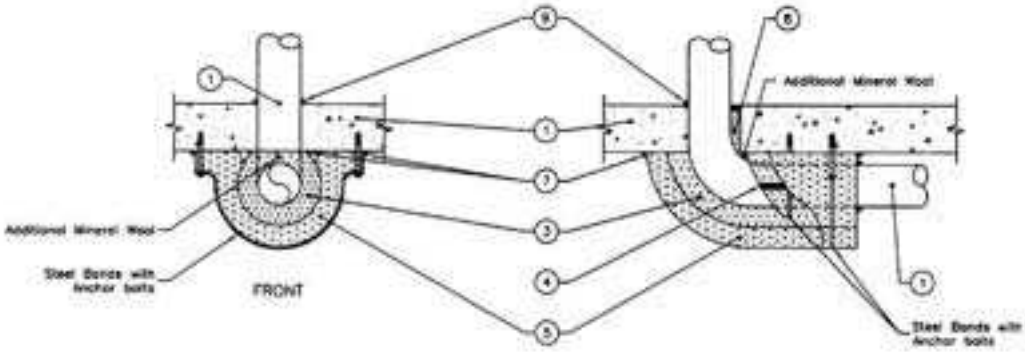

ITS Intertek Testing Services

FL0712

Grabber Construction Products
5255 Country Club Drive
Highland, Utah 84003

GrabberGard EFC
GrabberGard IFC

JWA/PHV 120-10

System Design Instructions

Penetrating Item: Centered or offset in hole, see table above. Single penetrations only, maximum hole size not to exceed table above. Firestop system components may be installed over tees, elbows and couplers for pipes sized not to exceed table above.

1. **Floor/Ceiling or Wall Fire Separation:** 2 hour fire rated ASTM E-119 and CAN/ULC S101 floor/ceiling/wall assemblies as follows:
   a) Cast in place normal or lightweight density concrete floor/ceiling assembly having a minimum cross section thickness of 5-1/2 in. (138 mm);
   b) Cast in place concrete wall assembly having a minimum cross section thickness of 5-1/2 in. (138 mm) or
   c) Concrete block wall assembly solidly filled with cementitous grout having a minimum cross section of 8 in. (200 mm).
2. **Firestop System, Component 1:** Min 2 in. thick by min 36 in. (650 mm) long hollow cylindrical mineral wool sleeve insulation with a minimum density of 8 PCF (128 kg/m3) installed around penetrating item. Aluminum foil surface jacket is optional. Mineral wool to be tightly butted at longitudinal joint. Sleeve to be held in place with steel hose clamps spaced min 8 in. (200 mm) OC and butted to the underside of the concrete floor assembly. If pipe is connected to a tee or elbow that is closer than 4" (100 mm) below slab, sleeve to be fastened to underside of slab with 1/2 in. (13 mm) wide steel band and anchor bolts spaced max 8 in. (200 mm) OC. If pipe is connected to a tee or elbow that is closer than 2" (50 mm) below slab, additional mineral wool is to be packed between pipe and underside of slab and the "U" shape sleeve to be attached to be fastened to underside of slab with 1/2 in. (13 mm) wide steel band and anchor bolts spaced max 8 in. (200 mm) OC.
3. **Firestop System, Component 2:** GRABBER CONSTRUCTION PRODUCTS iNC. – GrabberGard EFC* or GrabberGard IFC* min 1/16 in. (1-1/2 mm) thickness by 1/2 in. (13 mm) wide layer to be applied along seam of sleeve of firestop component 1.
4. a) **Firestop System, Component 3a:** Min 2 in. thick by min 36 in. (650 mm) long hollow cylindrical mineral wool sleeve insulation with a minimum density of 8 PCF (128 kg/m3) installed around first sleeve. Aluminum foil surface jacket is optional. Mineral wool to be tightly butted at longitudinal joint. Sleeve to be held in place with steel hose clamps spaced min 8 in. (200 mm) OC and butted to the underside of the concrete floor assembly. If pipe is connected to a tee or elbow that is closer than 4" (100 mm) below slab, sleeve to be fastened to underside of slab with 1/2 in. (13 mm) wide steel band and anchor bolts spaced max 8 in. (200 mm) OC.
   b) **Firestop System, Component 3b:** As an alternative to Item 5a, min 2 in. thick by min 36 in. (650 mm) long mineral wool insulation with a minimum density of 4-6 PCF (68 kg/m3) wrapped around first sleeve. Mineral wool to overlap min 2 in. at longitudinal joints and be tightly butted at transverse joints. Sleeve to be held in place with steel hose clamps spaced min 8 in. (200 mm) OC and butted to the underside of the concrete floor assembly. If pipe is connected to a tee or elbow that is closer than 4" (100 mm) below slab, sleeve to be fastened to underside of slab with 1/2 in. (13 mm) wide steel bands and anchor bolts spaced max 8 in. (200 mm) OC.
5. **Firestop System, Component 4:** Riser Clamp, for vertical pipes only, where elbows and/or tees are not used, min 4 in. (100 mm) galv steel riser clamp installed below mineral wool sleeves to retain the material in position against the underside of the floor. Min 1/2 in (13mm) thick, min 4 PCF mineral wool to be installed between clamp and pipe to ensure a tight fit.
6. **Firestop System, Component 5:** GRABBER CONSTRUCTION PRODUCTS INC. – GrabberGard EFC* or GrabberGard IFC* min 1/2 in. (13 mm) diam bead applied at sleeve/concrete and sleeve/penetrant interface.
7. **Firestop System, Component 6:** Filler material, mineral rock wool insulation with a minimum density of 4-6 PCF (68 kg/m3) compressed a minimum of 25% into the annular space at a minimum depth of 5 in. (125 mm). Recess filler material 1/2 in. (13 mm) for sealant placement.
8. **Firestop System, Component 7:** GRABBER CONSTRUCTION PRODUCTS INC. – GrabberGard EFC* or GrabberGard IFC* to be installed at a minimum thickness of 1/2 in. (13 mm) within the annulus on top surface of floor assembly. On 0 – 1/4 in. (6 mm) annular spaces, a 1/2 in. (13 mm) diameter fillet bead must be placed around the penetrating item on top surface of floor assembly.

***WH Labeled Component**

Grabber Construction Products
5255 Country Club Drive
Highland, Utah 84003

Design No. JWA/PHV 120-11

Single Penetrations
Horizontal or Vertical (floor/ceiling and walls)
Test Standards: ASTM E-814, UL 1479, ULC S115-M05
Test Furnace Internal Positive Pressure Differential – 2.5 Pa (0.01 in. of water) Minimum

Penetrating Material & Size	Max Hole Size	Annular Space	ASTM E 814/UL 1479		ULC S115 M05	
			"F" Rating	"T" Rating	"FH" Rating	"FTH" Rating
Steel and Cast Iron Pipe up to 4 in. Sch 10 & up	8 in.	0 – 1½ in.	2 Hour	35 Min	2 Hour	35 Min
Copper Pipe and Tubing up to 4 in. ID	8 in.	0 – 1½ in.	2 Hour	35 Min	2 Hour	35 Min

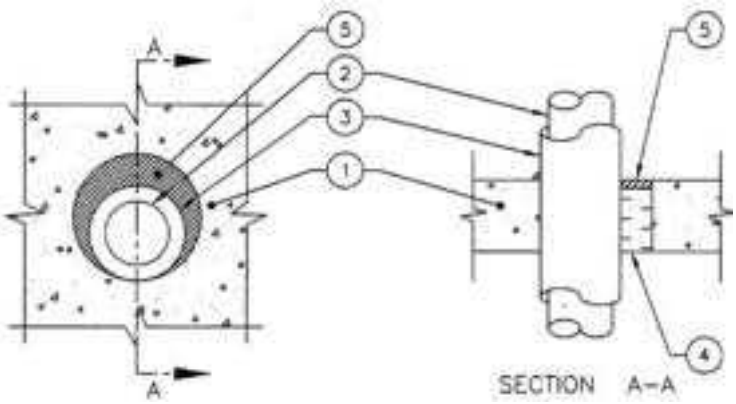

System Design Instructions

1. **Floor/Ceiling or Wall Fire Separations:**
   - **a)** Cast in place normal or light density concrete floor/ceiling assemblies minimum thickness of 4½ in. (114mm) or;
   - **b)** Cast in place concrete wall assemblies having a minimum cross section thickness of 6 in. (150mm) or;
   - **c)** Hollow or concrete filled unit masonry (concrete block) wall assemblies laid up with mortar having a minimum cross section thickness of 8 in. (200mm).
2. **Penetrating Item:** Centered or offset in hole, see table above. Single penetration only, maximum hole size not to exceed table above.
3. **Through Insulating Materials:** Max 1 in. (25 mm) wall thickness fiberglass or batt insulation (paper faced), tightly wrapped around the penetrating item, having a minimum density of 3.5 lbs/pcf and listed to provide a flame spread rating of 25 and a smoke developed rating of 50 or less.
4. **Firestop System Component 1:** Filler Material, mineral rock wool or ceramic fiber insulation with a minimum density of 4-6 PCF (68 kg/m3) compressed a minimum of 25% into the annular space at a minimum depth of 4 in. (100 mm). Recess filler material 1/4 in. (6mm) to allow placement on sealant on the top surface of floor or each side of the wall.
5. **Firestop System Component 2:** GRABBER CONSTRUCTION PRODUCTS INC. – GrabberGard EFS* (mastic) for vertical or horizontal applications sprayed into place with a minimum wet film thickness of 1/4 in. (6mm). Always overlap GrabberGard EFS* onto the surface of the substrate a minimum of 1/2 in. (13mm). Do not thin GrabberGard EFS* firestop mastic when spraying, use equipment capable of applying material as supplied.

***WH Labeled Component**

Warnock Hersey

Grabber Construction Products
5255 Country Club Drive
Highland, Utah 84003

GrabberGard EFC
GrabberGard IFC

Design No. JWA/PHV 120-12

Single and Multiple Penetrations
Horizontal or Vertical (floor/ceiling and walls)
Test Standards: ASTM E-814, UL 1479 for all penetrations
ULC S115-M05 for metallic, electrical, optical, glass penetrations only
Test Furnace Internal Positive Pressure Differential – 2.5 Pa (0.01 in. of water) Minimum

Penetrating Material & Size	Max Hole Size	Annular Space	Fire "F" Rating	Fire/Hose "FH" Rating	Temp Rating "FTH" Rating
For Use In The United States Only					
PVC Plastic Pipe up to 2½" OD (Process & Supply Pipe)	5½"	0" - 1½"	2 Hour	2 Hour	2 Hour
CPVC Plastic Pipe up to 3" ID (Process & Supply Pipe)	6"	0" - 1½"	2 Hour	2 Hour	2 Hour
For Use In Canada And The United States					
Steel, EMT, Cast Pipe up to 24" (Schedule 10 and up)	26"	¼" - 1"	2 Hour	2 Hour	15 Min
Super Flo Steel Pipe up to 4" ID (Thin Wall and up)	10½"	0" - 3½"	2 Hour	2 Hour	25-88 Min
Copper Pipe and Tubing up to 4" ID (Thin Wall and up)	8"	0" - 2"	2 Hour	2 Hour	22 Min
Loomex/Romex to 1½" OD (PVC/CPVC Jacket)	4½"	0" - 1½"	2 Hour	2 Hour	18 Min
BX/Teck Cable to 3-3/8" OD (PVC/CPVC Jacket)	7"	0" - 2½"	2 Hour	2 Hour	1 and 2 Hour
Telephone, Cablevision, Fiber Optic Cable to 1" OD (PVC/CPVC Jacket)	4"	0" - 1½"	2 Hour	2 Hour	1 and 2 Hour
Single or Multiple BX/Teck Cable to 3-3/8" OD	7"	0" - 1½"	2 Hour	2 Hour	1 and 2 Hour
Borosilicate Glass Pipe up to 4" OD	7"	0" - 1½"	2 Hour	2 Hour	22 Min

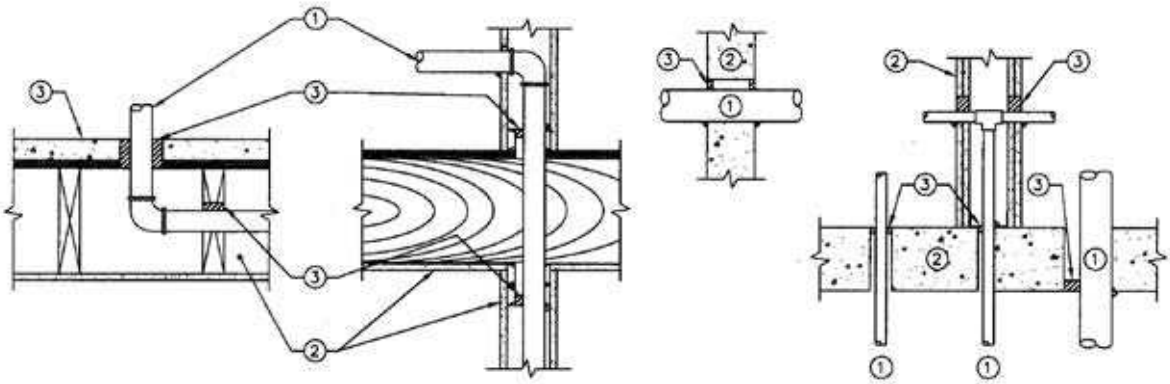

System Design Instructions

1. Penetrating Item: Centered or offset in hole, see table above. Up to 10 penetrations of steel pipe, conduit or electrical wiring 1" (25mm) diameter or less, up to 3 penetrations of copper pipe when 2 are ½" (13mm) diameter or less. Elbows, Tee's and couplings can penetrate the firestop system.
2. Floor/Ceiling or Wall Fire Separations: 1 hour or 2 hour rated ASTM E-119 or CAN/ULC S101 assemblies as follows:
   - **a)** Metal or wood framed gypsum wall board (GWB) wall assemblies or;
   - **b)** Wood framed (GWB) floor/ceiling assemblies with min. nominal 8" depth joists, with or without concrete topping.
   - **c)** Cast in place normal or light density concrete floor/ceiling assemblies having a minimum cross section thickness of 4½" (114mm) or;
   - **d)** Cast in place concrete wall assemblies having a minimum cross section thickness of 6" (150mm) or;
   - **e)** Hollow or concrete filled unit masonry (concrete block) wall assemblies laid up with mortar having a minimum cross section thickness of 8" (200mm).

ITS Intertek Testing Services

FL0712

Grabber Construction Products
5255 Country Club Drive
Highland, Utah 84003

GrabberGard EFC
GrabberGard IFC

JWA/PHV 120-12

3. **Firestop System Component 1:** GRABBER CONSTRUCTION PRODUCTS INC. – GrabberGard EFC* or GrabberGard IFC* can be used as a single component firestop for service penetrations where the annular space does not exceed 1½" (37mm). For annular space exceeding 1½" (37mm) see Section 4. Firestop System Component 2. Hollow cavity GWB fire separations also require a seal where penetrating items, from the table above, exit the header or sill plates into the adjoining fire separation. On 0" to ¼" (6mm) annular spaces a 3/8" (10mm) diameter fillet bead must be placed around the penetrating item. Metallic pipe and electrical penetrations of horizontal concrete fire separations require the use of filler material, see 4. Firestop System Component 2.
   - **a) Vertical concrete fire separations:** IFC* or EFC* at a minimum depth of ½" (12mm). Horizontal concrete fire separations: IFC* or EFC* at a minimum sealant depth of ½" (12mm) with 3" (76 mm) of 4-6 lb. density mineral wool compressed 25% into the annular space.
   - **b) Framed fire separations:** IFC* or EFC* filled to the full depth of the GWB membrane on both sides of the fire separation.
   - **c) Header and sill plates:** IFC* or EFC* at a minimum depth of ¾" (12 mm) at sill plate and a minimum depth of 1" at header plate.
4. **Firestop System Component 2:** Filler Material – For annular space exceeding 1½" (37mm), install 4-6 PCF density mineral wool compressed 25% into the annular space at a depth of 3" (76mm). Recess from the surface to allow for placement of sealant.

***WH Labeled Component**

Grabber Construction Products
5255 Country Club Drive
Highland, Utah 84003

GrabberGard EFC
GrabberGard IFC

Design No.: JWA/PHV 120-13

Single Penetrations
Horizontal (floor/ceiling)
Test Standards: ASTM E-814, UL 1479,
CAN/ULC S115-M05: open and closed systems
Test Furnace Internal Positive Pressure Differential – 50 Pa (0.2 in. of water)

Penetrating Material & Size	Max Hole Size	Annular Space	Fire "F" Rating	Fire/Hose "FH" Rating	Temp Rating "FTH" Rating
PVC Plastic Pipe 1-1/2" - 4"	4 1/2"	0" – 1/4"	Up to 2 Hr	Up to 2 Hr	Up to 2 Hr
ccPVC Plastic Pipe 1-1/2" - 4"	4 1/2"	0" – 1/4"	Up to 2 Hr	Up to 2 Hr	Up to 2 Hr
ABS Plastic Pipe 1-1/2" - 4"	4 1/2"	0" – 1/4"	Up to 2 Hr	Up to 2 Hr	110 min.
ccABS Plastic Pipe 1-1/2" - 4"	4 1/2"	0" – 1/4"	Up to 2 Hr	Up to 2 Hr	110 min.
FRPP Plastic Pipe 1-1/2" - 4"	4 1/2"	0" – 1/4"	Up to 2 Hr	Up to 2 Hr	Up to 2 Hr

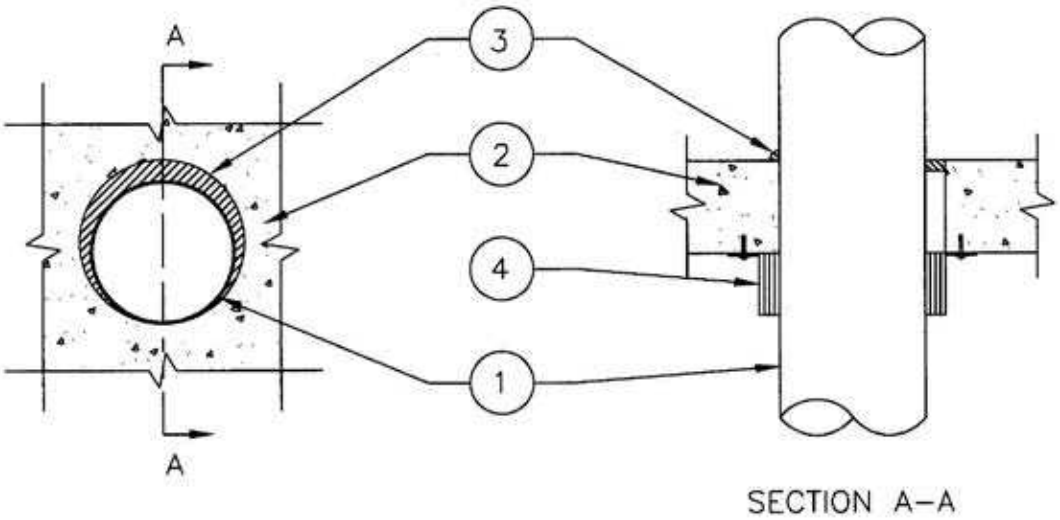

System Design Instructions

1. **Penetrating Item:** Centered or offset in hole, see table above. Single penetrations only, maximum hole size not to exceed table above.
2. **Floor or Wall Assembly:** Code conforming 2 hour rated floor or wall assembly having a min. nominal 4-1/2 in. thick lightweight or normal weight concrete. Wall may also be constructed of nominal 8 in. thick concrete blocks (filled or unfilled).
3. **Firestop System, Component 1** GRABBER CONSTRUCTION PRODUCTS INC. – GrabberGard EFC* or GrabberGard IFC* installed as 1/2" (13mm) diameter fillet bead around the penetrating item.
4. **Firestop System, Component 2:** PFP Partners – Plastic Pipe Collar* (PPC) specifically sized for diameter of pipe. PPC secured to floor/ceiling assembly using 1/4" diameter by 1-1/4" long steel masonry anchors over fender washers. For walls, the system shall be symmetrical, with PPC installed on each side of the assembly and fixed in the manner as described for floor penetrations.

***WH Labeled Component**

FL0712

Warnock Hersey

Grabber Construction Products
5255 Country Club Drive
Highland, Utah 84003

GrabberGard EFC
GrabberGard IFC

Design No.: JWA/PHV 120-14

Single Penetrations** – (Process & Supply)
Horizontal (floor/ceiling)
Test Standards: ASTM E-814, UL 1479, ULC S115-M05
Test Furnace Internal Positive Pressure Differential – 2.5 Pa (0.01 in. of water)

Penetrating Material & Size	Max Hole Size	Annular Space	Fire "F" Rating	Fire/Hose "FH" Rating	Temp Rating "FTH" Rating
CPVC Plastic Pipe 1-1/2" - 2"	2 1/2"	0" – 1/4"	Up to 2 Hr	Up to 2 Hr	Up to 2 Hr
PVC Plastic Pipe 1-1/2" - 4"	4 1/2"	0" – 1/4"	Up to 2 Hr	Up to 2 Hr	Up to 2 Hr

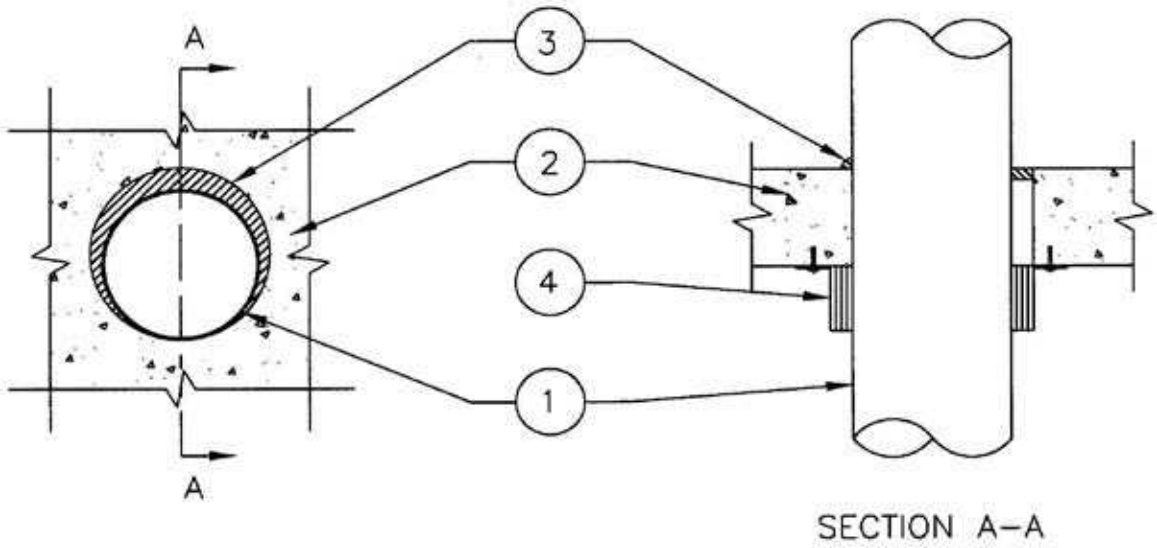

System Design Instructions

1. **Penetrating Item**:** Centered or offset in hole, see table above. Single penetrations only, maximum hole size not to exceed table above.
2. **Floor or Wall Assembly:** Code conforming 2 hour rated floor or wall assembly having a min. nominal 4-1/2 in. thick lightweight or normal weight concrete. Wall may also be constructed of nominal 8 in. thick concrete blocks (filled or unfilled).
3. **Firestop System, Component 1** GRABBER CONSTRUCTION PRODUCTS INC. – GrabberGard EFC* or GrabberGard IFC* installed as 1/2" (13mm) diameter fillet bead around the penetrating item.
4. **Firestop System, Component 2:** PFP Partners – Plastic Pipe Collar* (PPC) specifically sized for diameter of pipe. PPC secured to floor/ceiling assembly using 1/4" diameter by 1-1/4" long steel masonry anchors over fender washers. For walls, the system shall be symmetrical, with PPC installed on each side of the assembly and fixed in the manner as described for floor penetrations.

*WH Labeled Component

** Not Tested To 50 Pa Pressure Differential As Required By Canadian Code Requirements For Combustible Drain, Waste or Vent Piping Systems.

ITS Intertek Testing Services

FL0712

Warnock Hersey

Grabber Construction Products
5255 Country Club Drive
Highland, Utah 84003

GrabberGard EFC
GrabberGard IFC

Design No.: JWA/PHV 120-15

Single Penetrations
Horizontal (floor/ceiling) or Vertical (wall)
Test Standards: ASTM E-814, UL 1479: open and closed systems
ULC S115-M05**
Test Furnace Internal Positive Pressure Differential – 2.5 Pa (0.01 in. of water) Minimum

Penetrating Item Material	Nom Pipe Size (in.)	Annular Space (in.)	# of Wrap Strip	ASTM E814/UL1479		ULC S115	
				"F" Rating	"T" Rating	"F" & "FH" Rating	"FTH" Rating
PVC Pipe	Up to 3"	1/4"	2	Up to 2 Hours	2 Hours	Up to 2 Hours	2 Hours
ccPVC Pipe	Up to 3"	1/4"	2	Up to 2 Hours	2 Hours	Up to 2 Hours	2 Hours
CPVC Pipe	Up to 3"	1/4"	2	Up to 2 Hours	2 Hours	Up to 2 Hours	2 Hours
ABS Pipe	Up to 3"	1/4"	2	Up to 2 Hours	2 Hours	Up to 2 Hours	2 Hours
FRPP Pipe	Up to 2"	1/8"	1	Up to 2 Hours	2 Hours	Up to 2 Hours	2 Hours
FRPP Pipe	Up to 3"	1/4"	2	Up to 2 Hours	2 Hours	Up to 2 Hours	2 Hours
FRPP Pipe	Up to 4"	3/8"	3	Up to 2 Hours	0 Hours	Up to 2 Hours	0 Hours

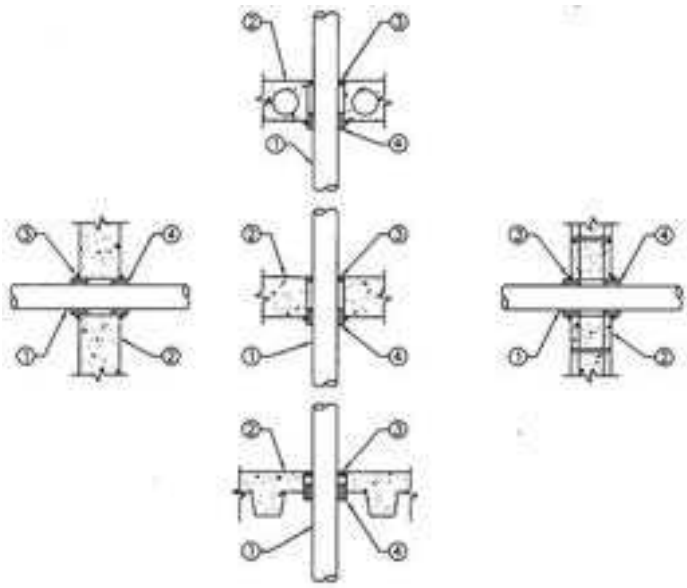

System Design Instructions

1. **Penetrating Item:** Centered in hole, see table above. Single penetrations only, maximum hole size not to exceed table above.

2. **Floor/Ceiling or Wall Assembly:**

   a) Hollow core pre-cast concrete floor/ceiling assembly having a min cross-section thickness of 6 in. (150 mm).
   b) Cast in place normal or light density concrete floor/ceiling assemblies having a minimum thickness of 4 1/2 in. (113 mm).
   c) Cast in place concrete wall assemblies having a minimum cross section thickness of 4 1/2 in. (113 mm) or,
   d) Hollow or concrete filled unit masonry (concrete block) wall assemblies laid up with mortar having a minimum cross section thickness of 6 in. (150mm).
   e) Min. 2 hour fire rated floor assembly. Min. 20 gauge or heavier galvanized steel decking with min. 4 ½ in. (113mm) concrete cover.

ITS Intertek Testing Services

FL0712

Grabber Construction Products
5255 Country Club Drive
Highland, Utah 84003

GrabberGard EFC
GrabberGard IFC

JWA/PHV 120-15

3. **Firestop System Component 1:** GRABBER CONSTRUCTION PRODUCTS INC. – GrabberGard EFC* or GrabberGard IFC* installed at a minimum thickness of 1/4 in. (6 mm) within the annulus at top surface of floor assembly. A minimum of 1/2 in. (13 mm) bead of GrabberGard EFC* or IFC* is to be applied between interface of the floor or wall and the outer layer of intumescent wrap strip (see Firestop System Component 2).
4. **Firestop System Component 2:** PFP Partners – Wrap Strip WS1* – Nominal 1/8 in. thick intumescent material supplied in 2 in. (50 mm) wide strips. See table for number of layers of wrap strip friction fitted into annular space. Wrap strip to extend max. 1/4 in. (6 mm) below the bottom surface of the floor or both sides of the wall and fastened in place with aluminum foil tape.

***WH Labeled Component**

** Tested in accordance to Canadian Code requirements for FRPP pipes. PVC, ABS and CPVC not tested to 50 Pa pressure differential as required by Canadian Code Requirements for combustible DWV pipes.

Warnock Hersey

Grabber Construction Products
5255 Country Club Drive
Highland, Utah 84003

GrabberGard EFC
GrabberGard IFC

Design No.: JWA/PHV 120-16

Single Penetrations
Horizontal (floor/ceiling) or Vertical (wall)
Test Standards: ASTM E-814, UL 1479, ULC S115-M05
Non-metallic open and closed systems
Positive Pressure Differential – 50 Pa (0.2 in. of water) Minimum

Penetrating Item Material	Nom Pipe Size (in.)	Annular Space (in.)	# of Wrap Strip	ASTM E814/UL1479		ULC S115	
				"F" Rating	"T" Rating	"F" & "FH" Rating	"FTH" Rating
PEX Pipe	Up to 2" ID	1/4"	2	Up to 2 Hours	1/4 Hour	Up to 2 Hours	1/4 Hour
PVC Pipe	Up to 2"	1/8"	1	Up to 2 Hours	3/4 Hour	Up to 2 Hours	3/4 Hour
PVC Pipe	< 2" to 3"	1/4"	2	Up to 2 Hours	2 Hours	Up to 2 Hours	2 Hours
PVC Pipe	< 3" to 4"	3/8"	3	Up to 2 Hours	2 Hours	Up to 2 Hours	2 Hours
ccPVC Pipe	Up to 2"	1/8"	1	Up to 2 Hours	2 Hours	Up to 2 Hours	2 Hours
ccPVC Pipe	< 2" to 3"	1/4"	2	Up to 2 Hours	2 Hours	Up to 2 Hours	2 Hours
ccPVC Pipe	< 3" to 4"	3/8"	3	Up to 2 Hours	2 Hours	Up to 2 Hours	2 Hours
CPVC Pipe	Up to 2"	1/8"	1	Up to 2 Hours	2 Hours	Up to 2 Hours	2 Hours
CPVC Pipe	< 2" to 3"	1/4"	2	Up to 2 Hours	2 Hours	Up to 2 Hours	2 Hours
CPVC Pipe	< 3" to 4"	3/8"	3	Up to 2 Hours	2 Hours	Up to 2 Hours	2 Hours
ABS Pipe	Up to 2"	1/8"	1	Up to 2 Hours	1/4 Hour	Up to 2 Hours	1/4 Hour
ABS Pipe	< 2" to 3"	1/4"	2	Up to 2 Hours	2 Hours	Up to 2 Hours	2 Hours
ABS Pipe**	< 3" to 4"	3/8"	3	Up to 2 Hours	2 Hours	Up to 2 Hours	2 Hours
FRPP Pipe**	Up to 2"	1/8"	1	Up to 2 Hours	2 Hours	Up to 2 Hours	2 Hours

**Not tested through concrete fluted steel deck floor assembly

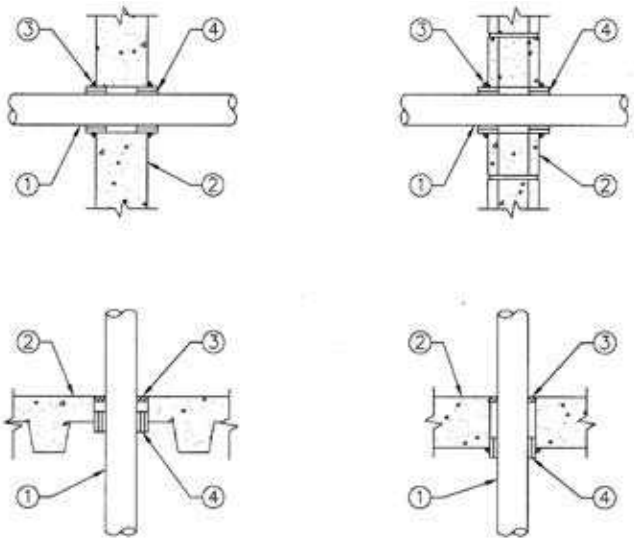

ITS Intertek Testing Services

FL0712

Grabber Construction Products
5255 Country Club Drive
Highland, Utah 84003

GrabberGard EFC
GrabberGard IFC

JWA/PHV 120-16

System Design Instructions

1. **Penetrating Item:** Centered in hole, see table above. Single penetrations only.

2. **Floor/Ceiling or Wall Assembly:**

   a) Cast in place normal or light density concrete floor/ceiling assemblies having a minimum thickness of 4 1/2 in. (113 mm).
   b) Cast in place concrete wall assemblies having a minimum cross section thickness of 4 1/2 in. (113 mm) or,
   c) Hollow or concrete filled unit masonry (concrete block) wall assemblies laid up with mortar having a minimum cross section thickness of 8 in. (200mm).
   d) Min 20 gauge or heavier galvanized steel decking with min 1-1/2 in. (38 mm) flute height firmly supported, with min 3 in. (75 mm) concrete cover.

3. **Firestop System Component 1** GRABBER CONSTRUCTION PRODUCTS INC. – GrabberGard EFC* or GrabberGard IFC* installed at a minimum thickness of 1/4 in. (6 mm) within the annulus at top surface of floor assembly. A minimum of 1/2 in. (13 mm) bead of GrabberGard EFC* or GrabberGard IFC* is to be applied between interface of the floor or wall and the outer layer of intumescent wrap strip (see Firestop System Component 2).

4. **Firestop System Component 2:** PFP Partners – Wrap Strip WS1* – Nominal 1/8 in. thick intumescent material supplied in 2 in. (50 mm) wide strips. See table for number of layers of wrap strip friction fitted into annular space. Wrap strip to extend max. 1/4 in. (6 mm) below the bottom surface of the floor or both sides of the wall and fastened in place with aluminum foil tape.

***WH Labeled Component**

Warnock Hersey

Grabber Construction Products
5255 Country Club Drive
Highland, Utah 84003

GrabberGard EFC
GrabberGard IFC

Design No.: JWA/PHV 120-17

Single Penetrations
Horizontal (floor/ceiling)
Test Standards: ASTM E-814, UL 1479,
CAN/ULC S115-M05: open and closed systems
Test Furnace Internal Positive Pressure Differential – 50 Pa (0.2 in. of water)

Penetrating Material & Size	Max Hole Size	Annular Space	Fire "F" Rating	Fire/Hose "FH" Rating	Temp Rating "FTH"Rating
PVC Plastic Pipe 1-1/2" – 6"	8"	1/2" – 1"	Up to 2 Hr	Up to 2 Hr	Up to 2 Hr
ccPVC Plastic Pipe 1-1/2" - 6"	8'	1/2" – 1"	Up to 2 Hr	Up to 2 Hr	Up to 2 Hr

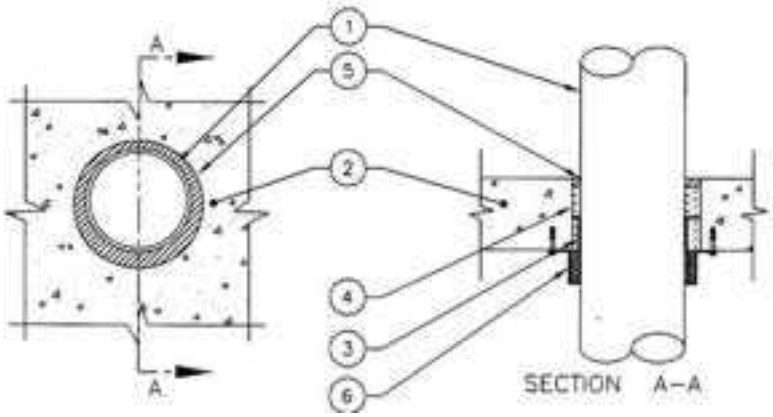

System Design Instructions

1. **Penetrating Item:** Centered or offset in hole, see table above. Single penetrations only, maximum hole size not to exceed table above.
2. **Floor or Wall Assembly:** Code conforming 2 hour rated floor or wall assembly having a min. nominal 4 1/2"(115mm) thick lightweight or normal weight concrete or hollow-core concrete. Wall may also be constructed of nominal 8"(203mm) thick concrete blocks (filled or unfilled).
   Hole Core Concrete (Not Shown): Seal the annular space at pipe penetration on the floor side with a min 1/2" (13mm) thickness of GRABBER CONSTRUCTION PRODUCTS INC. – GrabberGard EFC* or GrabberGard IFC*. Caulking is applied over min 2" (102mm) thickness of mineral wool. Bottom side of floor assembly firestop as per Firestop Systems, Components 1, 2 & 4 (See below).
3. **Firestop System, Component 1:** PFP Partners – Wrap Strip WS1* – Nominal 1/8" (3 mm) thick intumescent material supplied in 2"(50mm) wide strips. Min 1 layer of strip to be wrap tightly round penetration and fastened in place with aluminum foil tape. Wrap strip to be flush with bottom surface of floor or both sides of the wall.
4. **Firestop System, Component 2:** Filler material, mineral rock wool insulation with a minimum density of 4-6 PCF (68 kg/m3) compressed a minimum of 25% into the annular space at a minimum depth of 2" (102mm) on each side of the floor or wall assembly. Recess filler material 1/2" (13mm) for sealant placement, not required for wall assemblies. For walls, filler material to be flush with both sides of the assembly.
5. **Firestop System, Component 3:** GRABBER CONSTRUCTION PRODUCTS INC. – GrabberGard EFC* or GrabberGard IFC* installed at a minimum thickness of 1/2" (13mm) within the annulus on top surface of floor assembly, not required for wall assemblies.
6. **Firestop System, Component 4:** PFP Partners – Plastic Pipe Collar* (PPC) specifically sized for diameter of pipe. PPC secured to floor/ceiling assembly or wall assembly using 1/4"(6mm) diameter by 1-1/4"(32mm) long steel masonry anchors over fender washers. For walls, the system shall be symmetrical, with PPC installed on each side of the assembly and fixed in the manner as described for floor penetrations.

***WH Labeled Component**

FL0712

ITS Intertek Testing Services

Warnock Hersey

Grabber Construction Products
5255 Country Club Drive
Highland, Utah 84003

GrabberGard EFC
GrabberGard IFC

Design No.: JWA/PHV 120-18

Single Penetrations

Horizontal (floor/ceiling)
Test Standards: ASTM E-814, UL 1479,
CAN/ULC S115-M05: open and closed systems
Test Furnace Internal Positive Pressure Differential – 50 Pa (0.2 in. of water)

Penetrating Material & Size	Max Hole Size	Annular Space	Fire "F" Rating	Fire/Hose "FH" Rating	Temp Rating "FTH" Rating
PVC Plastic Pipe 1-1/2" – 6"	8"	1/2" – 1"	Up to 2 Hr	Up to 2 Hr	Up to 2 Hr
ccPVC Plastic Pipe 1-1/2" - 6"	8'	1/2" – 1"	Up to 2 Hr	Up to 2 Hr	Up to 2 Hr
XFR-PVC (IPEX) Plastic Pipe 1-1/2" – 6"	8"	1/2" – 1"	Up to 2 Hr	Up to 2 Hr	Up to 2 Hr

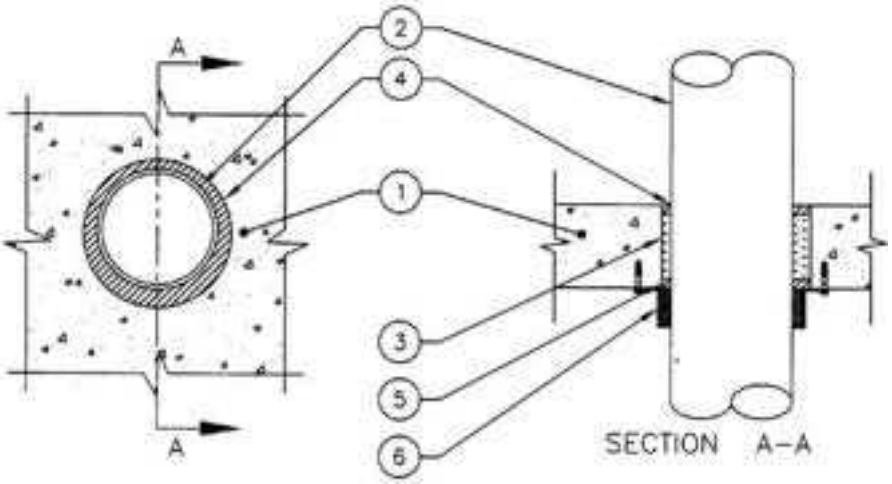

System Design Instructions

1. **Penetrating Item:** Centered or offset in hole, see table above. Single penetrations only, maximum hole size not to exceed table above.
2. **Floor or Wall Assembly:** Code conforming 2 hour rated floor or wall assembly having a min. nominal 4 1/2"(115mm) thick lightweight or normal weight concrete or hollow-core concrete. Wall may also be constructed of nominal 8"(203mm) thick concrete blocks (filled or unfilled).
   Hole Core Concrete (Not Shown): Seal the annular space at pipe penetration on the floor side with a min 1/2" (13mm) thickness of GRABBER CONSTRUCTION PRODUCTS INC. – GrabberGard EFC* or GrabberGard IFC*. Caulking is applied over min 2" (102mm) thickness of mineral wool
3. **Firestop System, Component 1:** Filler material, mineral rock wool insulation with a minimum density of 4-6 PCF (68 kg/m3) compressed a minimum of 25% into the annular space at a minimum depth of 2" (102mm) on each side of the floor or wall assembly. Recess filler material 1/2" (13mm) for sealant placement at top and bottom of floor assembly and on both sides of the wall assemblies.
4. **Firestop System, Component 2:** GRABBER CONSTRUCTION PRODUCTS INC. – GrabberGard EFC* or GrabberGard IFC* installed at a minimum thickness of 1/2" (13mm) within the annulus on top surface of floor assembly or minimum thickness of 1/2" (13mm) on both sides of the wall assemblies.
5. **Firestop System, Component 3:** GRABBER CONSTRUCTION PRODUCTS INC. – GrabberGard EFC* or GrabberGard IFC* installed at a minimum thickness of 1/4" (7 mm) within the annulus on bottom surface of floor assembly, or minimum thickness of 1/2" (13mm) on both sides of the wall assemblies.
6. **Firestop System, Component 4:** PFP Partners – Plastic Pipe Collar* (PPC) specifically sized for diameter of pipe. PPC secured to floor/ceiling assembly or wall assembly using 1/4"(6mm) diameter by 1-1/4"(32mm) long steel masonry anchors over fender washers. For walls, the system shall be symmetrical, with PPC installed on each side of the assembly and fixed in the manner as described for floor penetrations.

***WH Labeled Component**

ITS Intertek Testing Services

FL0712

Grabber Construction Products
5255 Country Club Drive
Highland, Utah 84003

GrabberGard EFC
GrabberGard IFC

Design No.: JWA/PHV 120-19

Single Penetrations
Horizontal (floor/ceiling)
Test Standards: ASTM E-814, UL 1479, ULC S115-M05
Test Furnace Internal Positive Pressure Differential – 50 Pa (0.2 in. of water)

Penetrating Material & Size	Max Hole Size	Annular Space	Fire "F" Rating	Fire/Hose "FH" Rating	Temp Rating "FTH" Rating
PVC Schedule 80 Pipe 1-1/2" – 2"	3-1/2"	0" – 1-1/8"	Up to 2 Hr	Up to 2 Hr	Up to 2 Hr
CPVC Schedule 80 Pipe 1-1/2" – 2"	3-1/2"	0" – 1-1/8"	Up to 2 Hr	Up to 2 Hr	Up to 2 Hr

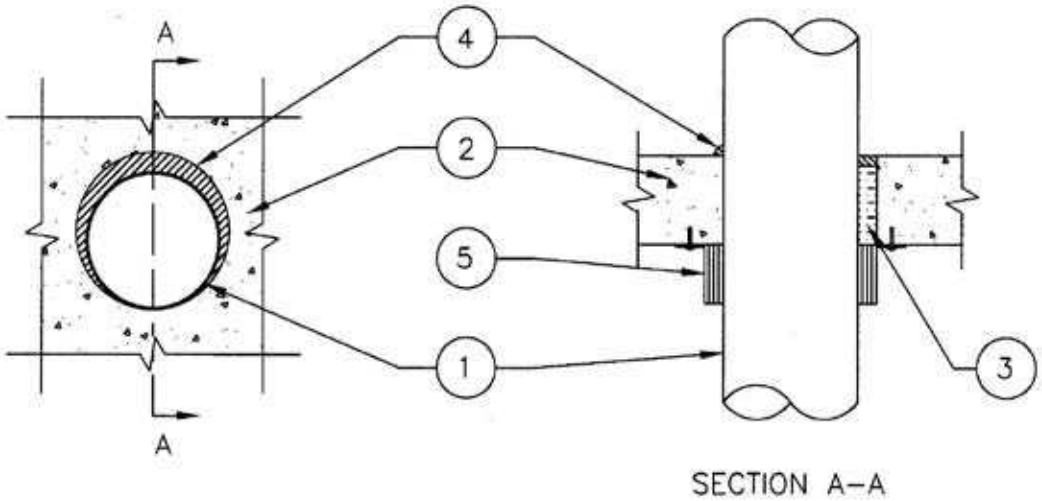

System Design Instructions

1. **Penetrating Item:** Centered or offset in hole, see table above. Single penetrations only, maximum hole size not to exceed table above. *CPVC pipe for non-DWV (drain, waste or vent) applications only.
2. **Floor or Wall Assembly:** Code conforming 2 hour rated floor or wall assembly having a min. nominal 4 1/2" (114 mm) thick lightweight or normal weight concrete. Wall may also be constructed of nominal 8" (203 mm) thick concrete blocks (filled or unfilled).
3. **Firestop System, Component 1** Filler material, mineral rock wool insulation with a minimum density of 4-6 PCF (68 kg/m3) compressed a minimum of 25% into the annular space at a minimum depth of 4" (102mm). Recess filler material 1/2" (13mm) for sealant placement.
4. **Firestop System, Component 2:** GRABBER CONSTRUCTION PRODUCTS INC. – GrabberGard EFC* or GrabberGard IFC* installed at a minimum thickness of 1/2" (13mm) within the annulus on top surface of floor assembly or at both sides of the wall assembly. On 0 – 1/4" (6mm) annular spaces, a 1/2" (13mm) diameter fillet bead must be placed around the penetrating item.
5. **Firestop System, Component 3:** PFP Partners - Plastic Pipe Collar* (PPC) specifically sized for diameter of pipe. PPC secured to floor/ceiling assembly using 1/4" (6 mm) diameter by 1-1/4" (32 mm) long steel masonry anchors over fender washers. For walls, the system shall be symmetrical, with PPC installed on each side of the assembly and fixed in the manner as described for floor penetrations.

***WH Labeled Component**

ITS Intertek Testing Services

FL0712

Warnock Hersey

Grabber Construction Products
5255 Country Club Drive
Highland, Utah 84003

GrabberGard EFC
GrabberGard IFC
GrabberGard EFS

Design No. JWA/PHV 120-20

Horizontal or Vertical Expansion/Control Joints
Test Standards: ASTM E-814, UL 1479, UL 2079, ULC S115-M05
**L-Rating At Ambient < 1 CFM/Lin Ft
**L-Rating At 400° F < 1 CFM/Lin Ft
Test Furnace Internal Positive Pressure Differential – 2.5 Pa (0.01 in. of water) Minimum
Max. Joint Movement – Compression 1", Extension 0"

Penetrating Material & Size	Max Width	Fire "F" Rating	Hose "FH" Rating	Temp. "FTH" Rating
Vertical and Horizontal Joints	6"	Up to 2 hrs	Up to 2 hrs	Up to 2 hrs
Horizontal Joints with Metal Cover Plate	12"	Up to 2 hrs	Up to 2 hrs	Up to 2 hrs
Horizontal Joints without Metal Cover Plate	12"	Up to 2 hrs	N/A	Up to 2 hrs

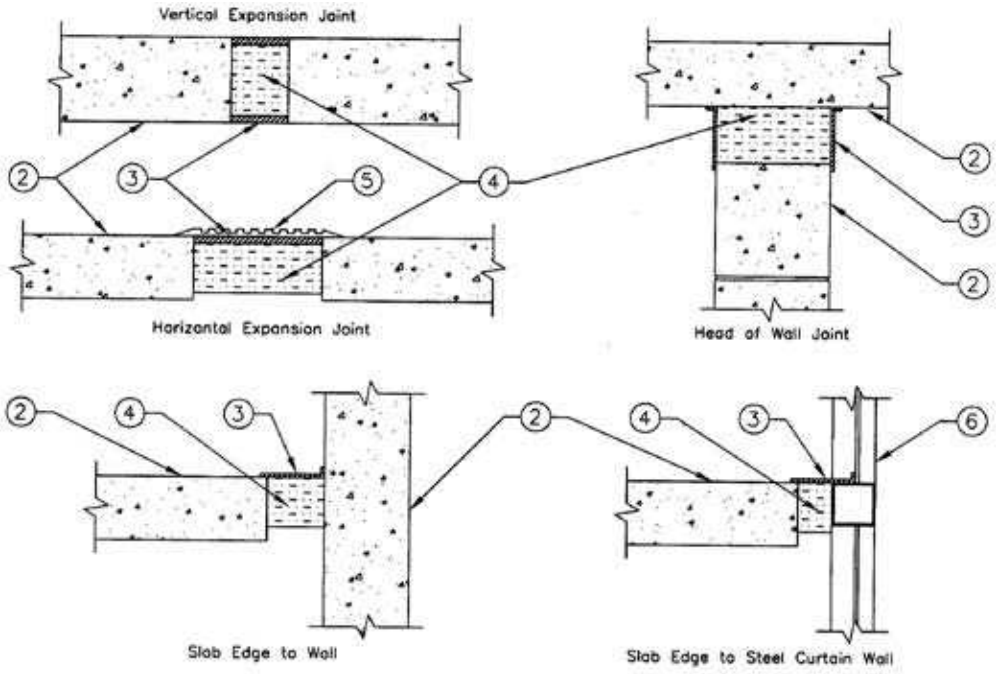

System Design Instructions

1. **Penetrating Item:** For service penetrations see System Design JWA/PHV 120-09.

2. **Floor/Ceiling or Wall Assemblies:** ASTM E-119 and CAN/ULC S101 up to 2 hour rated floor/ceiling or wall assemblies conforming to as follows:
   - **a)** Cast in place normal or light density concrete floor/ceiling assemblies having a minimum cross section thickness of 4 1/2" (114mm) or;
   - **b)** Cast in place concrete wall assemblies having a minimum cross section thickness of 6" (150mm) or;
   - **c)** Hollow or concrete filled unit masonry (concrete block) wall assemblies laid up with mortar having a minimum cross section thickness of 8" (203 mm).

ITS Intertek Testing Services

FL0712

Grabber Construction Products
5255 Country Club Drive
Highland, Utah 84003

GrabberGard EFC
GrabberGard IFC
GrabberGard EFS

JWA/PHV 120-20

3. **Firestop System Component 1:** GRABBER CONSTRUCTION PRODUCTS INC. – GrabberGard EFC* or GrabberGard IFC* for vertical or horizontal applications or GrabberGard EFS* (mastic) for vertical or horizontal applications sprayed into place with a minimum wet film thickness of 1/8" (3mm). Always overlap GrabberGard EFS* onto the surface of the substrate a minimum of 1/2" (13mm). Do not thin GrabberGard EFS* firestop mastic when spraying, use equipment capable of applying material as supplied.
4. **Firestop System Component 2:** Filler material mineral rock wool or ceramic fiber insulation with a minimum density of 4-6 PCF (68 kg/m3) compressed a minimum of 25% into the joint space at a minimum depth of 3-1/2" (88 mm). Recess filler material 1/4" (6 mm) for GrabberGard EFC* or GrabberGard IFC* series sealant placement. On joints less than 1/4" (6 mm), filler material not required.
5. **Metal Cover Plate:** On expansion/control joints over 6" (150mm) in width, cover top surface of joint with minimum 18 gauge sheet metal or 3/16" (5mm) aluminum cover plate. Overlap cover plate onto the concrete a minimum of 1-1/2" (38mm) on each side. Reliably fasten on 8" (203mm) centers one side of the cover plate only to the concrete surface to allow for expansion/contraction.
6. **Steel Curtain Wall:** This design was tested from concrete slab edge to simulated steel curtain wall. However, possible deflection of the curtain wall system due to fire exposure has not been evaluated. The design should ensure rigidity of the curtain wall system to prevent such movement.

** Leakage Test performed on 6 inch joint using GrabberGard EFS - cycled 500 times at 10 cycles/min - 16.7% compression and extension.

ITS Intertek Testing Services

Grabber Construction Products
5255 Country Club Drive
Highland, Utah 84003

Design No. JWA/PV 60-01

Single Penetrations
Vertical (walls)
Test Standards: ASTM E-814, UL 1479: open and closed systems, ULC S115-M05: closed systems
Positive Pressure Differential – 2.5 Pa (0.01 in. of water) Minimum

Penetrating Material & Size	Max Hole Size	Annular Space	E 814 & UL 1479		ULC S115-M05		
			"F" Rating	"T" Rating	"F" Rating	"FH" Rating	"FTH" Rating
PVC Plastic pipe to 2"	3-5/8"	1/4" to1/2"	Up to 1 Hr	Up to 1 Hr	Up to 1 Hr	Up to 1 Hr	Up to 1 Hr
CPVC Plastic pipe to 2"	3-5/8"	1/4" to1/2"	Up to 1 Hr	22 min	Up to 1 Hr	Up to 1 Hr	22 min
X-Linked Polyethylene tubing to 1" ID	2-1/2"	1/4" to1/2"	Up to 1 Hr	Up to 1 Hr	Up to 1 Hr	Up to 1 Hr	Up to 1 Hr

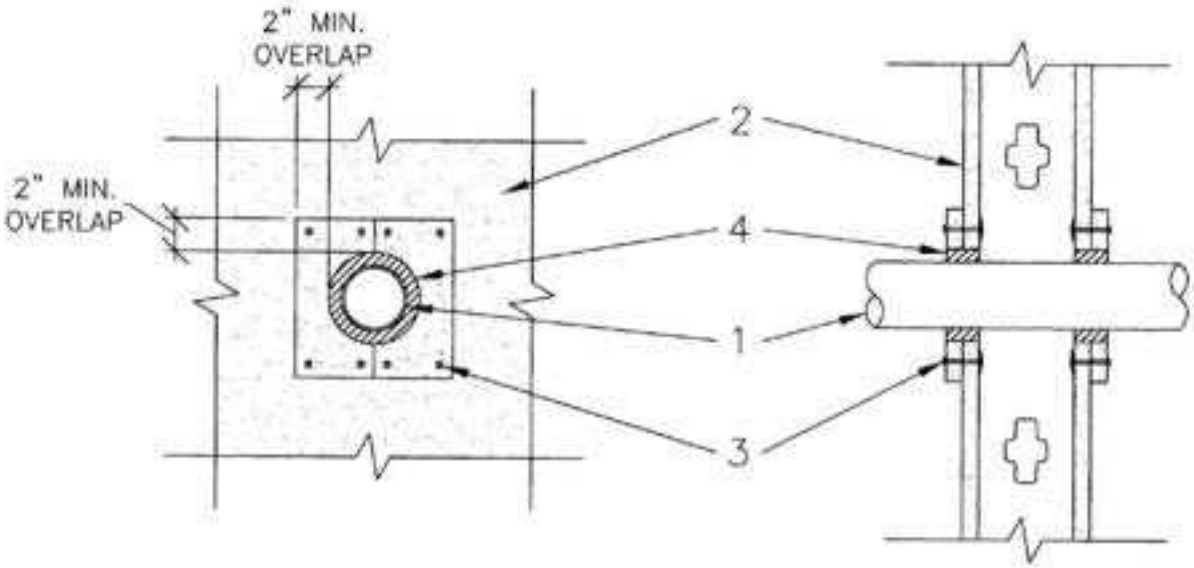

System Design Instructions

1. **Penetrating Item:** Centered in hole, see table above.
2. **Wall Fire Separations:** 1 hour rated ASTM E-119 or CAN/ULC S101 metal or wood framed insulated gypsum wall board (GWB) wall assemblies.
3. **Firestop System; Component 1:** One layer of 5/8" Type "X" gypsum wallboard collar securely fastened to gypsum wallboard with drywall anchors. Caulk a 3/8" (10mm) bead around perimeter edges of GWB collar after installation.
4. **Firestop System; Component 2:** GRABBER CONSTRUCTION PRODUCTS INC. – GrabberGard IFC* fully filling the annular space to the full depth of the membrane.

***WH Labeled Component**

Warnock Hersey

Grabber Construction Products
5255 Country Club Drive
Highland, Utah 84003

GrabberGard EFC
GrabberGard IFC

Design No. JWA/PV 60-02

Metal Decking to Vertical Wall Assemblies
Rating: Up to 1 Hour "FTH"
Test Standards: ULC S115-M05
Rating: Up to 1 Hour "F Rating"
Test Standards: ASTM E-814, UL 2079
Test Furnace Internal Positive Pressure Differential – 2.5 Pa (0.01 in. of water) Minimum
Joint System Cycled 500 Times at 10 Cycles Per Minute – 33% Compression or Extension

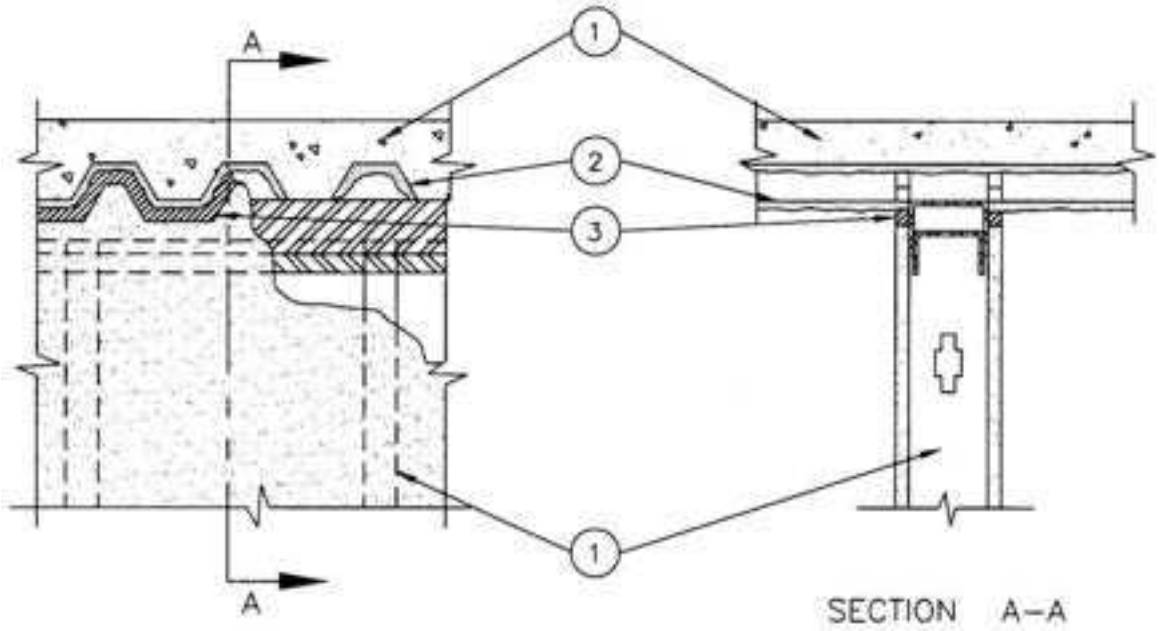

System Design Instructions

1. **Floor/Ceiling Fire Separation:** 1 or 2 hour ASTM E-119 or CAN/ULC S101 fluted steel deck roof/ceiling or floor/ceiling assemblies.
2. **Wall Fire Separation:** 1 hour ASTM E-119 or ULC S101 metal framed gypsum wallboard (GWB) wall assemblies with a single slip track ceiling runner or a double top track system consisting of a single top track with a deflection channel. Gypsum board cut to profile of coated fluted steel deck with a nominal 3/4 in. (19mm) joint between the top of the gypsum board and the underside of the spray applied fire resistive material. Steel studs to be cut 1/2 to 3/4 in. less than assembly height.
3. **Firestop System Component 1:** Min 3/8 in. to max 15/16 in. thickness of MK-6 spray applied fire resistive material applied to the underside of the floor/ceiling assembly.
4. **Firestop System Component 2:** GRABBER CONSTRUCTION PRODUCTS INC. – GrabberGard EFC* or GrabberGard IFC* into the gap between the top of the gypsum wallboard and the spray applied fire resistive material to the full depth of the gypsum board membrane on both sides of the wall assembly.

***WH Labeled Component**

ITS Intertek Testing Services

FL0712

Grabber Construction Products
5255 Country Club Drive
Highland, Utah 84003

GrabberGard EFC
GrabberGard IFC

Design No. JWA/PV 60-03

Multiple Penetrations
Vertical (walls)
Test Standards: ASTM E-814, UL 1479, ULC S115-M05
Positive Pressure Differential – 2.5 pa (0.01 in. of water) Minimum

Penetrating Material & Size	Max Size Area	Annular Space	ASTM 814/UL1479		ULC S115-M05	
			"F" Rating	"T" Rating	"F" & "FH" Rating	"FT" Rating
Copper Pipe up to 3"	32" x 3-1/2"	0" – 3/4"	60 minutes	20 minutes	60 minutes	20 minutes
Cast Iron Pipe up to 3"	32" x 3-1/2"	0" – 3/4"	60 minutes	20 minutes	60 minutes	20 minutes
Steel Pipe up to 3"	32" x 3-1/2"	0" – 3/4"	60 minutes	20 minutes	60 minutes	20 minutes

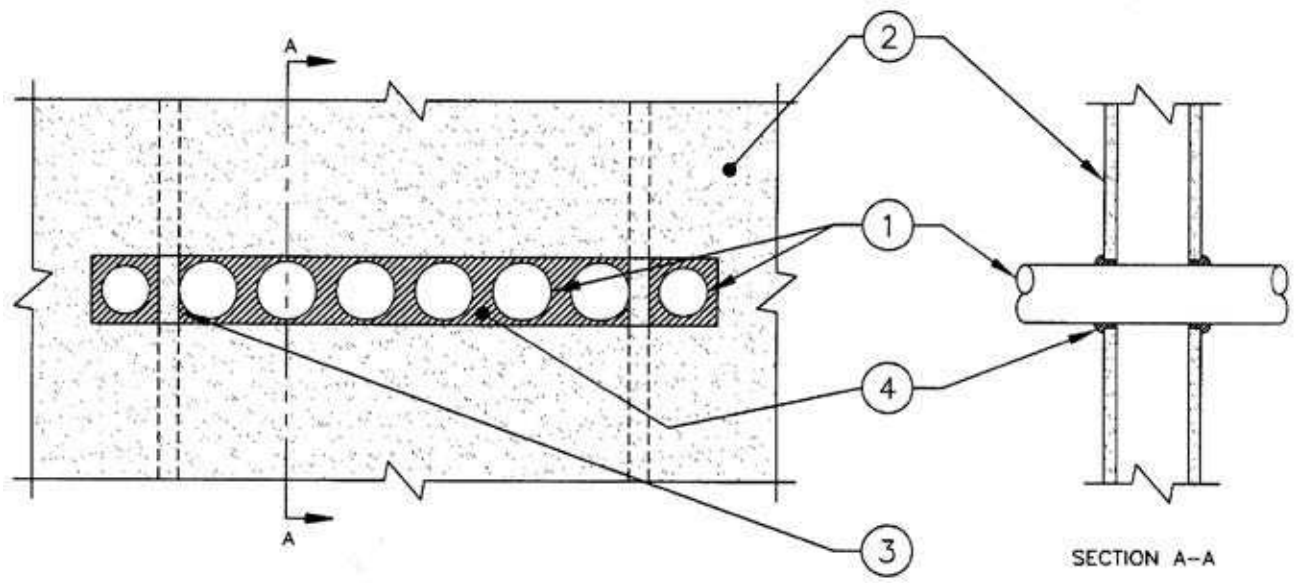

System Design Instructions

1. **Penetrating Item:** Centered or offset in hole, see table above. Multiple penetrations, maximum hole size not to exceed table above.
2. **Wall Assembly:** Code conforming 1 hour rated nominal 2 in. by 4 in. metal or wood framed gypsum wallboard (GWB) wall assemblies.
3. **Wall Assembly:** Where studs are exposed through opening a min 5/8 in. thick Type X gypsum wallboard to be fastened to exposed area on both sides of wall.
4. **Firestop System, Component 1:** GRABBER CONSTRUCTION PRODUCTS INC. – GrabberGard EFC* or GrabberGard IFC* installed at a minimum thickness of 5/8" (18mm) within the annulus on both surfaces of wall assembly. Between 0-1/2" (12mm) annulus spaces, a 1/2" (13mm) diameter fillet bead must be placed around the penetrating item.

***WH Labeled Component**

Warnock Hersey

Grabber Construction Products
5255 Country Club Drive
Highland, Utah 84003

GrabberGard EFC
GrabberGard IFC

Design No.: JWA/PV 60-04

Single Penetrations
Vertical (wall) Assembly
Test Standards: ASTM E-814, UL 1479
CAN/ULC S115-M05: non-metallic open and closed systems
Positive Pressure Differential – 50 Pa (0.2 in. of water) Minimum

Penetration Material & Size	Design Number	Max Hole Size	Annular Space	ASTM E-814		ULC S115-M95	
				"F"	"T"	"F"	"FTH"
ABS up to 1-1/2"	A	2"	0" – 1/2"	1 hour	50 min	1 hour	50 min
ccABS up to 1-1/2"	A	2"	0" – 1/2"	1 hour	50 min	1 hour	50 min
PVC up to 1-1/2"	A	2"	0" – 1/2"	1 hour	1 hour	1 hour	1 hour
ccPVC up to 1-1/2"	A	2"	0" – 1/2"	1 hour	1 hour	1 hour	1 hour
CPVC up to 1-1/2"	A	2"	0" – 1/2"	1 hour	1 hour	1 hour	1 hour
Nonmetallic Rigid Conduit up to 1-1/2"	A	2"	0" – 1/2"	1 hour	1 hour	1 hour	1 hour
ABS up to 3"	B	4"	1/4"	1 hour	1 hour	1 hour	1 hour
ccABS up to 3"	B	4"	1/4"	1 hour	1 hour	1 hour	1 hour
PVC up to 3"	B	4"	1/4"	1 hour	1 hour	1 hour	1 hour
ccPVC up to 3"	B	4"	1/4"	1 hour	1 hour	1 hour	1 hour
CPVC up to 3"	B	4"	1/4"	1 hour	1 hour	1 hour	1 hour
Nonmetallic Rigid Conduit up to 3"	B	4"	1/4"	1 hour	1 hour	1 hour	1 hour
ABS up to 4"	C	5-1/4"	3/8"	1 hour	1 hour	1 hour	1 hour
ccABS up to 4"	C	5-1/4"	3/8"	1 hour	1 hour	1 hour	1 hour
PVC up to 4"	C	5-1/4"	3/8"	1 hour	1 hour	1 hour	1 hour
ccPVC up to 4"	C	5-1/4"	3/8"	1 hour	1 hour	1 hour	1 hour
CPVC up to 4"	C	5-1/4"	3/8"	1 hour	1 hour	1 hour	1 hour
Nonmetallic Rigid Conduit up to 4"	C	5-1/4"	3/8"	1 hour	1 hour	1 hour	1 hour

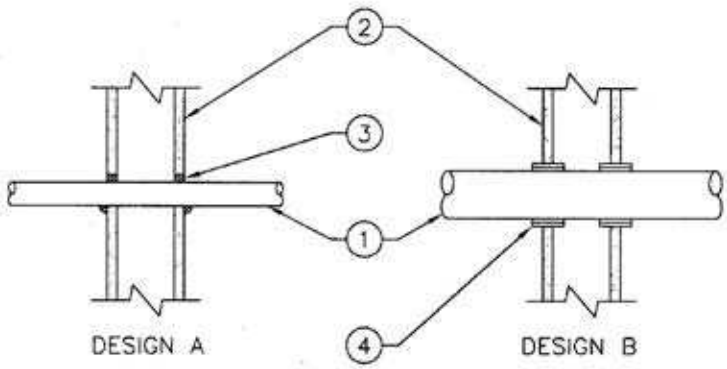

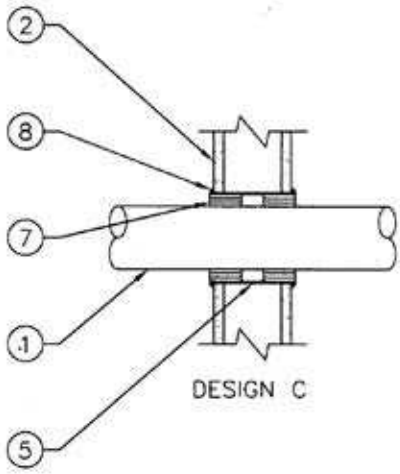

ITS Intertek Testing Services

FL0712

Grabber Construction Products
5255 Country Club Drive
Highland, Utah 84003

GrabberGard EFC
GrabberGard IFC

JWA/PV 60-04

System Design Instructions

1. **Penetrating Item:** Centered or offset in hole, see table above. Single penetrations only, maximum hole size not to exceed table above.
2. **Wall Assembly:** 1 hour ASTM E-119 or CAN/ULC S101 metal or wood framed fire rated gypsum wall board (GWB) wall fire assembly.

Design A

3. **Firestop System; Component 1:** GRABBER CONSTRUCTION PRODUCTS INC. – GrabberGard EFC* or GrabberGard IFC* installed at a minimum thickness of 5/8 in. (18mm) within the annulus of wall assembly. Between 0-1/4 in. (6mm) annulus spaces, a 1/2 in. (13mm) diameter fillet bead must be placed around the penetrating item.

Design B

4. **Firestop System; Component 2:** PFP Partners – Wrap Strip WS1* Nom 1/8 in. thick intumescent material supplied in 2 in. wide strips. Min two continuous layers of wrap strip to be wrapped around the circumference of the penetrant. Wrap strips are individually wrapped around penetrant with ends butted and held in place with aluminum foil tape. Butted ends of successive layers may be staggered or aligned. Layers of wrap strip to be centered in membrane such that there is the same distance on each side of membrane surface.
5. **Firestop System, Component 3:** (Optional) (Not Shown) GRABBER CONSTRUCTION PRODUCTS INC. – GrabberGard EFC* or GrabberGard IFC* min 1/4 in. diam bead of caulk to be applied at wrap strip/wallboard interface on both surfaces of wall.

Design C

6. **Firestop System, Component 4:** Min 20 gauge sheet metal sleeve, outside diam of sleeve to be tightly fitted with inside diam of opening, flush with or extend max 1/2 in. past both surfaces of wall.
7. **Firestop System; Component 5:** PFP Partners – Wrap Strip WS1* Nom 1/8 in. thick intumescent material supplied in 2 in. wide strips. Min three continuous layers of wrap strip to be wrapped around the circumference of the penetrant. Wrap strips are individually wrapped around penetrant with ends butted and held in place with aluminum foil tape. Butted ends of successive layers may be staggered or aligned. Wrap strips to be flush with both ends of sheet metal sleeve.
8. **Firestop System, Component 6:** GRABBER CONSTRUCTION PRODUCTS INC. – GrabberGard EFC* or GrabberGard IFC* min 1/4 in. diam bead of caulk shall be applied at sheet metal sleeve/wallboard interface on both surfaces of wall.

*WH Labeled Component

Warnock Hersey

Grabber Construction Products
5255 Country Club Drive
Highland, Utah 84003

GrabberGard EFC
GrabberGard IFC

Design No.: JWA/PV 60-05

Wall Opening Protection
Test Standards: ASTM E-119, UL 263, CAN/ULC S101-M05
Positive Pressure Differential – 2.5 pa (0.01 in. of water) Minimum

Metallic Outlet Box Size	Max Opening Size	Annular Space	"F" Rating	"FT" Rating	"FTH" Rating
Max 4 by 4 in. (102 by 102 mm)	20.3 sq in. (114.3 sq, mm)	1/4 in. (6.4 mm)	1 hour	1 hour	1 hour

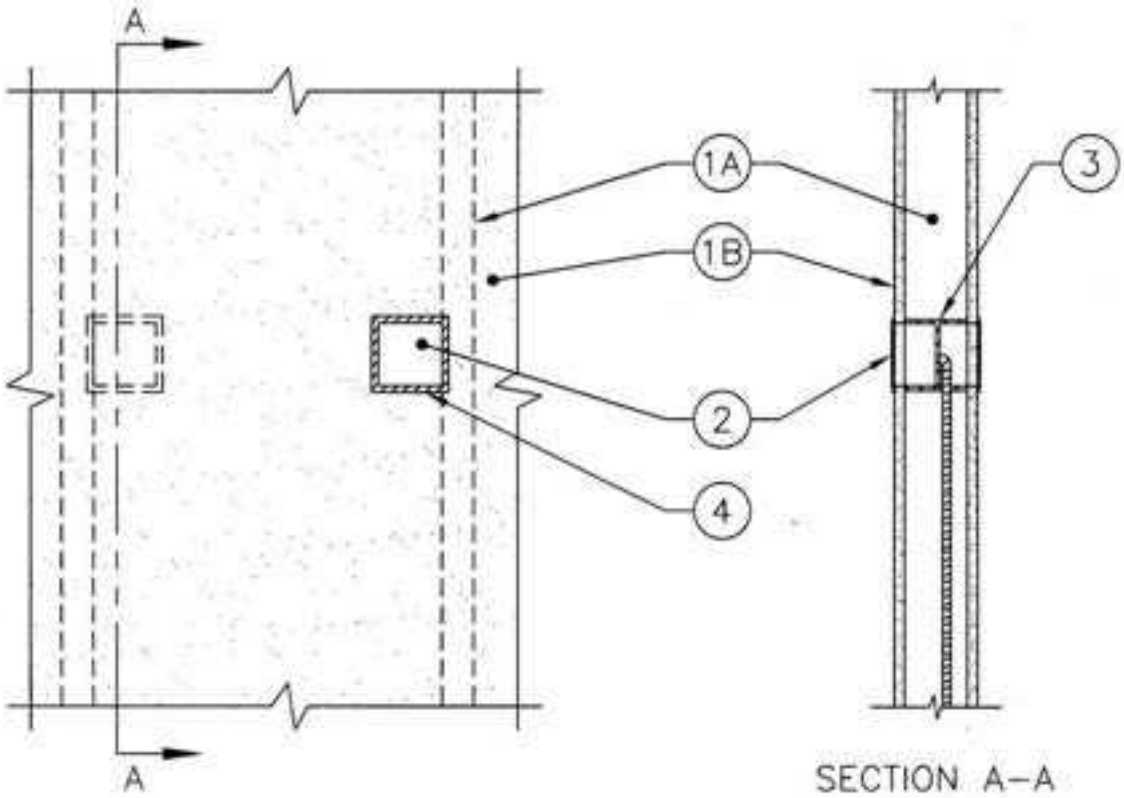

System Design Instructions

1. **Wall Assembly** – Code conforming 1 hour rated nominal 2 by 4 in. (39 by 89 mm) wood framed gypsum wallboard (GWB) wall and partition assemblies and shall include the following construction features:
   - **a) Studs** – Wall framing shall consist of min nom 2 by 4 in. (39 by 89 mm) wood studs spaced max 16 in. (406 mm) OC.
   - **b) Wallboard, Gypsum** – Thickness, type, number of layers and fasteners as specified in the individual wall and partition design.
2. **Partial Penetrants** – Max 4 by 4 in. (102 by 102 mm) metallic outlet box, with steel cover, installed either concentrically or eccentrically within the wall opening, on opposing studs spaced max 16 in. (406 mm) OC. The annular space between electrical receptacle outlet box and periphery of opening shall be min 0 in. (0 mm) (point contact) to max 1/4 in. (6.4 mm).

ITS Intertek Testing Services

Grabber Construction Products
5255 Country Club Drive
Highland, Utah 84003

GrabberGard EFC
GrabberGard IFC

JWA/PV 60-05

3. **Fill, Void or Cavity Material** – PFP Partners – MP1 – Putty Pad* – Min 1/8 in. (3.2 mm) thick moldable putty pads are to be installed to completely cover the exterior surfaces of the outlet box (except for the side of the outlet box against the stud) and completely seal against the stud within the stud cavity. An additional 3/4 in. (19 mm) ball of putty pad material used to plug the end of each electrical metallic tube or conduit at its connection to the box. When moldable putty pad outlet box protective material is used on boxes on both sides of wall as directed, the horizontal separation between boxes on opposite sides of the wall may be less than 16 in. (406 mm) provided that the boxes are not installed back to back.
4. **Firestop System, Component:** GRABBER CONSTRUCTION PRODUCTS INC. – GrabberGard EFC* or GrabberGard IFC* – Min. 1/4 in. (6.4 mm) diam. bead of fill material applied within the annulus around the perimeter of the electrical box and the gypsum wallboard interface.

***WH Labeled Component**

Grabber Construction Products
5255 Country Club Drive
Highland, Utah 84003

GrabberGard IFC

Design No. JWA/PV 120-01

Pipe Insulation Through Penetrations
Single Penetrations Only
Vertical (walls)
Test Standards: ASTM E-814, UL 1479, ULC S115-M05
Test Furnace Internal Positive Pressure Differential – 2.5 Pa (0.01 in. of water) Minimum

Penetrating Material & Size	Max Hole Size	Annular Space	Fire "F" Rating	Fire/Hose "FH" Rating	Temp Rating "FTH" Rating
Steel and Cast Iron Pipe up to 8" Sch 10 & up	11"	0" – 1/2"	2 Hour	2 Hour	2 Hour

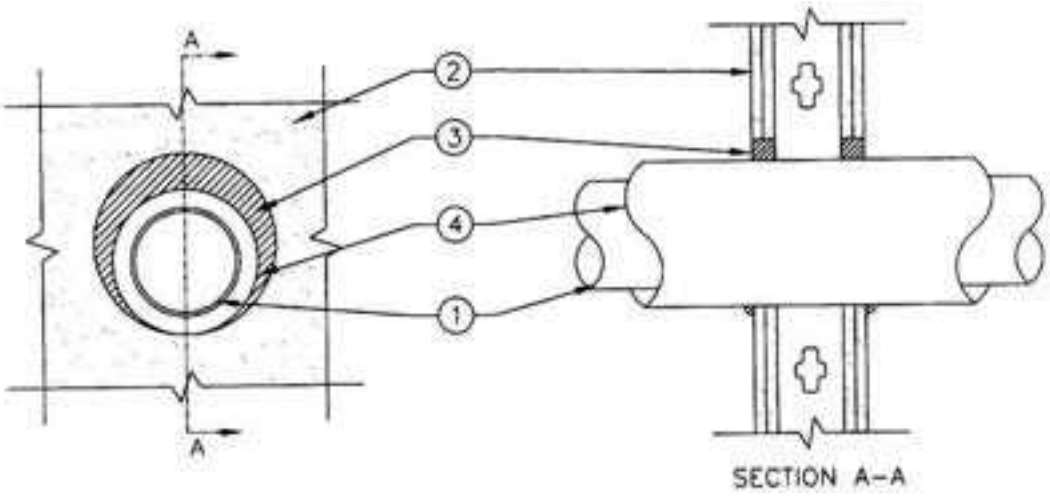

System Design Instructions

1. **Penetrating Item:** See table above. Single penetrations only.
2. **Wall Assemblies:** 2 hour rated ASTM E-119 or CAN/ULC S101 metal or wood framed gypsum wall board (GWB) wall assemblies.
3. **Firestop System:** GRABBER CONSTRUCTION PRODUCTS INC. – GrabberGard IFC* fully filling the annular space to the full depth of the membrane. On 0 – 1/4" (6mm) annular spaces, a 3/8" (10mm) diameter fillet bead must be placed around the penetrating item on the surface of the gypsum wall board.
4. **Through Insulating Material:** Koolphen K rigid phenolic foam insulation having a 1" (25mm) wall thickness.

***WH Labeled Componen**t

ITS Intertek Testing Services

FL0712

Warnock Hersey

Grabber Construction Products
5255 Country Club Drive
Highland, Utah 84003

GrabberGard EFC
GrabberGard IFC

Design No. JWA/PV 120-02

Pipe Insulation Through Penetrations
Single Penetrations Only
Vertical (walls)
Test Standards: ASTM E-814, UL 1479, ULC S115-M05
Test Furnace Internal Positive Pressure Differential – 2.5 Pa (0.01 in. of water) Minimum

Penetrating Material & Size	Max Hole Size	Annular Space	Fire "F" Rating	Fire/Hose "FH" Rating	Temp Rating "FTH" Rating
24" x 24" Steel Duct – 16 gauge (or heavier)	27-1/4" x 27-1/4"	1/2" – 3/4"	Up to 2 Hours	Up to 2 Hours	*
16" Steel Duct – 24 gauge (or heavier)	20"	1/2" – 1-1/2"	Up to 2 Hours	Up to 2 Hours	Up to 2 Hours

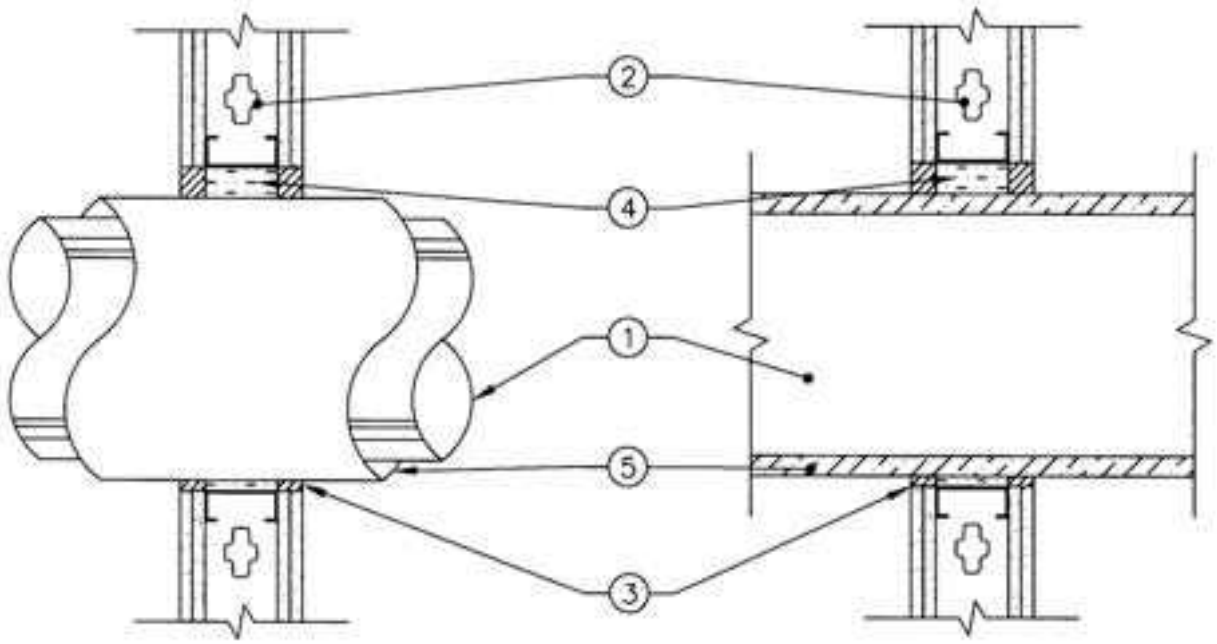

System Design Instructions

1. **Penetrating Item:** Centered or offset in hole, see table above. Single penetrations only.
   * Temperature rating is 52 min. and 2 hours for 1 hour and 2 hour wall assemblies respectively.
2. **Wall Assemblies:** 1 and 2 hour rated ASTM E-119 or CAN/ULC S101 metal or wood framed gypsum wall board (GWB) wall assemblies.
3. **Firestop System, Component 1:** GRABBER CONSTRUCTION PRODUCTS INC. – GrabberGard EFC* or GrabberGard IFC* fully filling the annular space to the full depth of the gypsum wall board (GWB) on both sides of the fire separation.
4. **Firestop System, Component 2:** Filler material:
   a) Mineral fiber wool insulation with a minimum density of 4-6 pcf firmly packed into the annular space at a minimum depth of 3-5/8" (92mm).
5. **Through Insulating Material:** Fiberglass duct wrap insulation having a 2" (51mm) wall thickness with a minimum density of .75 - 1.5 pcf installed as per manufacturer's installation instructions.

***WH Labeled Component**

ITS Intertek Testing Services

FL0712

Grabber Construction Products
5255 Country Club Drive
Highland, Utah 84003

GrabberGard IFC

Design No. JWA/PV 120-03

Single Penetrations
Vertical (walls)
Test Standards: ASTM E-814, UL 1479: open and closed system, ULC S115-M05: closed systems
Positive Pressure Differential – 2.5 Pa (0.01 in. of water) Minimum

Penetrating Material & Size	Max Hole Size	Annular Space	E 814 & UL 1479		ULC S115-M05		
			"F" Rating	"T" Rating	"F" Rating	"FH" Rating	"FTH" Rating
PVC Plastic pipe to 2"	3"	1/4"	0 Hr	Up to 40 min	Up to 2 Hr	0 Hr	Up to 40 min
CcPVC Plastic pipe to 2"	3"	1/4"	0 Hr	Up to 40 min	Up to 2 Hr	0 Hr	Up to 40 min
CPVC Plastic pipe to 2"	3-5/8"	1/2"	Up to 2 Hr	Up to 20 min	Up to 2 Hr	Up to 2 Hr	Up to 20 min
CPVC Plastic pipe to 2"	3"	1/4"	0 Hr	Up to 115 min	Up to 2 Hr	0 Hr	Up to 115 min
X-Linked Polyethylene tubing to 1" ID	2-1/2"	1/2"	0 Hr	Up to 70 min	Up to 2 Hr	0 Hr	Up to 70 min
X-Linked Polyethylene tubing to 1" ID	2"	1/2"	Up to 2Hr	Up to 15 min	Up to 2Hr	Up to 2Hr	Up to 15 min

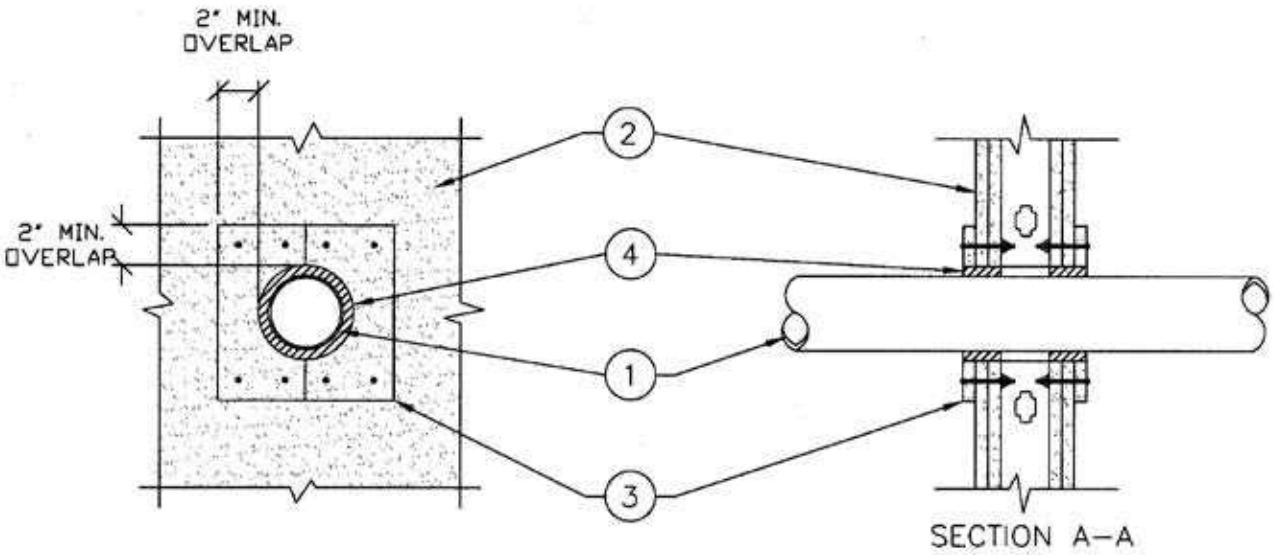

System Design Instructions

1. **Penetrating Item:** Centered in hole, see table above.
2. **Wall Fire Separations:** 2 hour rated ASTM E-119 or CAN/ULC S101 metal or wood framed insulated gypsum wall board (GWB) wall assemblies.
3. **Firestop System; Component 1:** One layer of 5/8" Type "X" gypsum wallboard collar securely fastened to gypsum wallboard with drywall anchors. Caulk a 3/8" (10mm) bead around perimeter edges of GWB collar after installation.
4. **Firestop System; Component 2:** GRABBER CONSTRUCTION PRODUCTS INC. – GrabberGard IFC* fully filling the annular space to the full depth of the membrane.

***WH Labeled Component**

ITS Intertek Testing Services

FL0712

Warnock Hersey

Grabber Construction Products
5255 Country Club Drive
Highland, Utah 84003

GrabberGard EFS

Design No. JWA/PV 120-04

Metal Decking to Vertical Wall Assemblies
Rating: Up to 2 Hours "FTH"
Test Standards: ASTM E-814, UL 2079, ULC S115-M05
Test Furnace Internal Positive Pressure Differential – 2.5 Pa (0.01 in. of water) Minimum
Joint System Cycled 500 Times at 10 Cycles Per Minute – 33% Compression or Extension

Method 1

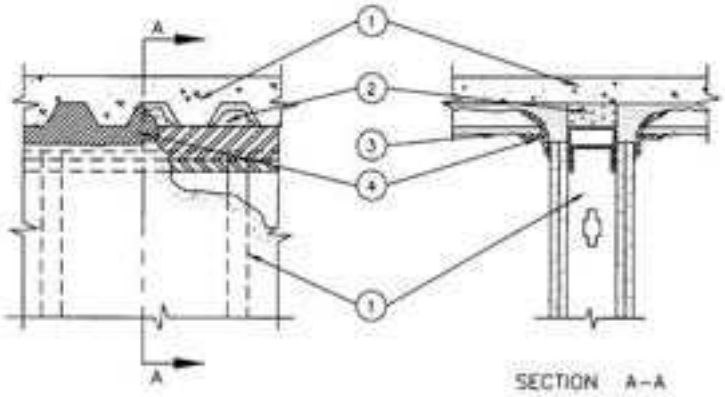

Method 2

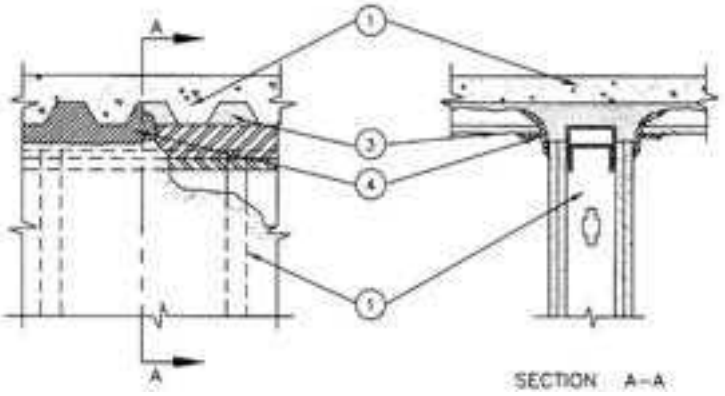

System Design Instructions

1. **Floor/Ceiling Fire Separation:** 1 or 2 hour ASTM E-119 or CAN/ULC S101 fluted steel deck (GWB) roof/ceiling or floor/ceiling assemblies.
   Wall Fire Separation: 1 or 2 hour ASTM E-119 or ULC S101 metal framed gypsum wall board (GWB) wall assemblies with a double top track consisting of a single top track with a deflection channel or slip track.
   The hourly F Rating of the firestop system is equal to the hourly fire rating of the wall assembly in which it is installed.

2. **Firestop System, Component 1:**
   Method 1: Filler material, 4 pcf mineral wool or 2.5 pcf fiberglass insulation compressed into each flute opening in the steel deck as a backing material for the Cafco 300.

3. **Method 2:** Filler material, Cafco 300 applied into each flute opening in the steel deck.
   Firestop System, Component 2: Min 3/8" to max 15/16" thickness of Cafco 300 applied to the underside of the floor/ceiling assembly with a 3" diameter radius formed at the steel deck/wall board interface on both sides of the wall assembly.

4. **Firestop System, Component 3:** Spray or brush one heavy coat of GRABBER CONSTRUCTION PRODUCTS INC. – GrabberGard EFS*, 1/8" (3mil) thick, on both sides of the assembly, fully covering all voids and overlapping a minimum of 1" (25mm) onto the metal deck and wall assembly.

***WH Labeled Component**

ITS Intertek Testing Services

FL0712

Warnock Hersey

Grabber Construction Products
5255 Country Club Drive
Highland, Utah 84003

GrabberGard EFC
GrabberGard IFC
GrabberGard EFS

Design No. JWA/PV 120-05

Metal Decking to Vertical Wall Assemblies
Rating: Up to 2 Hours "FTH"
Test Standards: ASTM E-814, UL 1479, ULC S115-M05
Test Furnace Internal Positive Pressure Differential – 2.5 Pa (0.01 in. of water) Minimum
Max Joint Width – 1in.
Joint System Cycled 500 Times at 10 Cycles Per Minute – 25% Compression or Extension

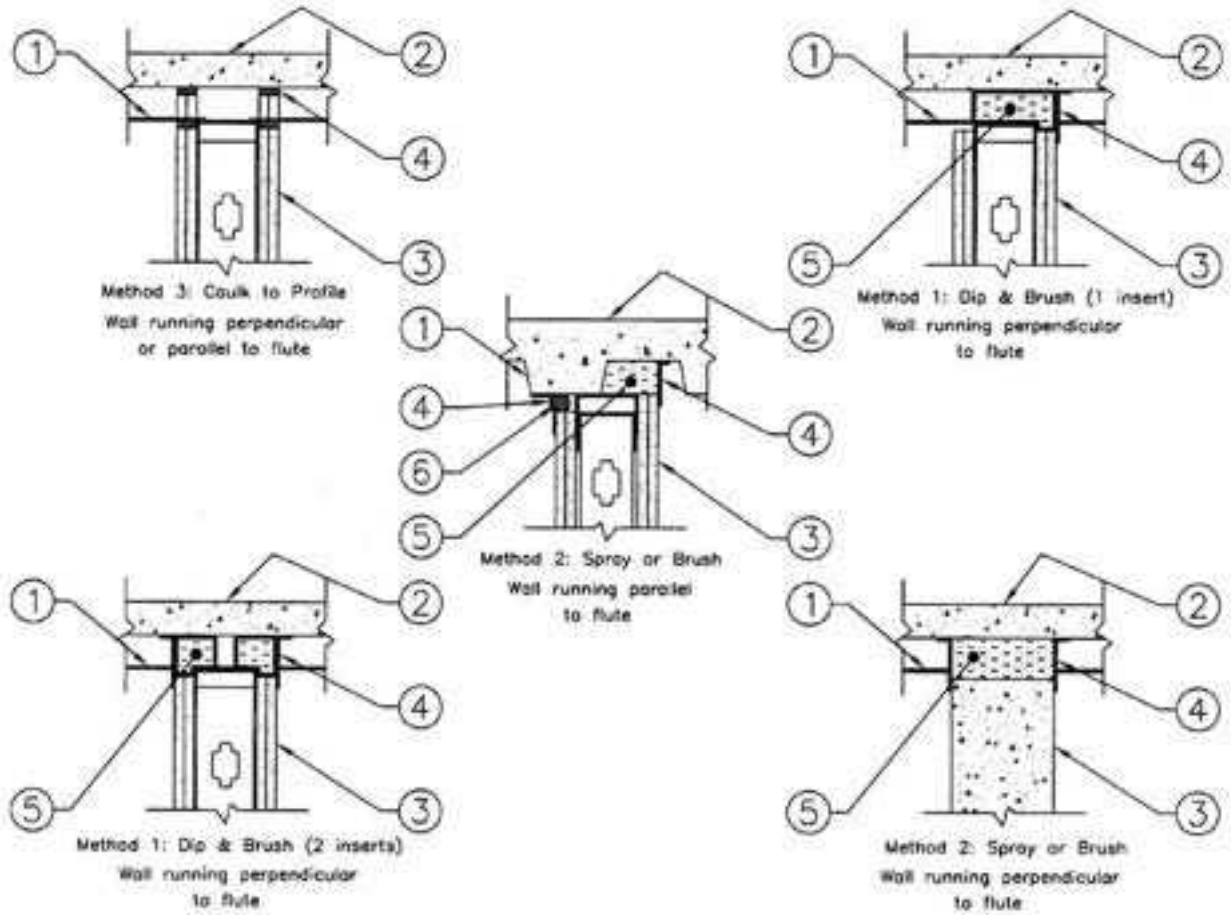

System Design Instructions

1. **Steel Decking:** Minimum 22 gauge or equal galvanized steel decking with up to 3½" (88mm) flute height firmly supported, with or without concrete cover.

2. **Floor/Ceiling Fire Separations:**

   a) 1 and 2 hour ASTM E-119 or CAN/ULC S101 fluted steel deck roof/ceiling or floor/ceiling assemblies.

3. **Wall Fire Separations Terminating at Fluted Steel Deck:**

   a) 1 and 2 hour ASTM E-119 or CAN/ULC S101 metal or wood framed gypsum wall board (GWB) assemblies or;
   b) Cast in place normal or light density concrete floor/ceiling assemblies having a minimum cross section thickness of 4½" (114mm) or;
   c) Cast in place concrete wall assemblies having a minimum cross section thickness of 6" (150mm) or;
   d) Hollow or concrete filled unit masonry (concrete block) wall assemblies laid up with mortar having a minimum cross section thickness of 8" (200mm).

ITS Intertek Testing Services

FL0712

Grabber Construction Products
5255 Country Club Drive
Highland, Utah 84003

GrabberGard EFC
GrabberGard IFC
GrabberGard EFS

JWA/PV 120-05

Firestop System Component 1:

4. **Method 1:** GRABBER CONSTRUCTION PRODUCTS INC. – GrabberGard EFS* – Dip & Brush: Dip each insert individually and fully coat in GrabberGard EFS* (firestop mastic), insert into flute opening to the desired depth. Brush exposed surface of insert on both sides smooth overlapping ½" (13mm) onto metal decking and/or the wall assembly to ensure complete coverage and no small gaps or pin holes exist. Brush excess material between flute foot and deflection/slip track to the next open flute cavity, sealing the seam between the steel decking and the deflection/slip track. If larger spaces are evident, fill tightly with mineral wool and brush a 1/16" (60mil) coat of GrabberGard EFS* to fully cover the area.
   Method 2: GRABBER CONSTRUCTION PRODUCTS INC. – GrabberGard EFS* – Spray or Brush: Install each insert at the desired location and spray or brush one heavy coat of GrabberGard EFS* 1/8" (120mil) thick, on both sides of the assembly, fully covering all voids and overlapping a minimum of ½"(13mm) onto the metal deck and wall assembly.
   Method 3: GRABBER CONSTRUCTION PRODUCTS INC. – GrabberGard EFC* or GrabberGard IFC* – Caulk to profile: Cut the gypsum wallboard to the profile of the deck and install to within ¾" of the deck. Caulk GrabberGard EFC* or GrabberGard IFC* into the gap between the gypsum board and the deck to the depth of the gypsum board membrane.

5. **Firestop System Component 2:** Flute Opening: Insert of 4-6 PCF (68kg/m3) mineral wool, cut 10% larger than the opening area. Depth: Cut the mineral wool insert to a depth of 5" (125mm) for the single insert detail, for the two-piece detail cut two 2½" deep inserts. Two-piece details can be installed one on each side of the assembly flush with the membrane surface. Additional pieces of mineral wool batt insulation are to be compressed 33 percent in thickness and are installed to completely fill the gap above the top of the wall and the bottom of the steel floor units, flush with both surfaces of wall. Mineral wool inserts can be installed in any of the configurations detailed in Methods 1 and 2. Exception: when flutes are running parallel with the wall, cut 4-6 PCF (68kg/m3) mineral wool inserts to the desired shape, 10% larger than the opening area and compress into the open cavity. All details require sealant as outlined in Section 4 of this system design.

6. **Firestop System Component 3:** (Optional) – When gaps between top of wall and bottom of the steel deck is less than or equal to 3/4 in. – Nom 1 in. diam polyethylene rod compressed and firmly packed into the nom 3/4 in. gap between the top of the wall and the bottom of the steel deck and forming material (Item 5) in areas of fluted deck. Backer rod compressed to be flush with surface of wall.

***WH Labeled Component**

Warnock Hersey

Grabber Construction Products
5255 Country Club Drive
Highland, Utah 84003

GrabberGard EFC
GrabberGard IFC

Design No. JWA/PV 120-06

Single and Multiple Penetrations
Vertical (walls)
Test Standards: ASTM E-814, UL 1479 ULC S115 : closed systems
Positive Pressure Differential – 2.5 Pa (0.01 in. of water) Minimum

Penetrating Material & Size	Max Hole Size	Annular Space	"F" Rating	"T" Rating
Max 4 - Max 1" Diameter Electrical	4-1/2	0" – 1"	Up to 2 Hrs	75 min
Non-metallic Tubing (PVC)				

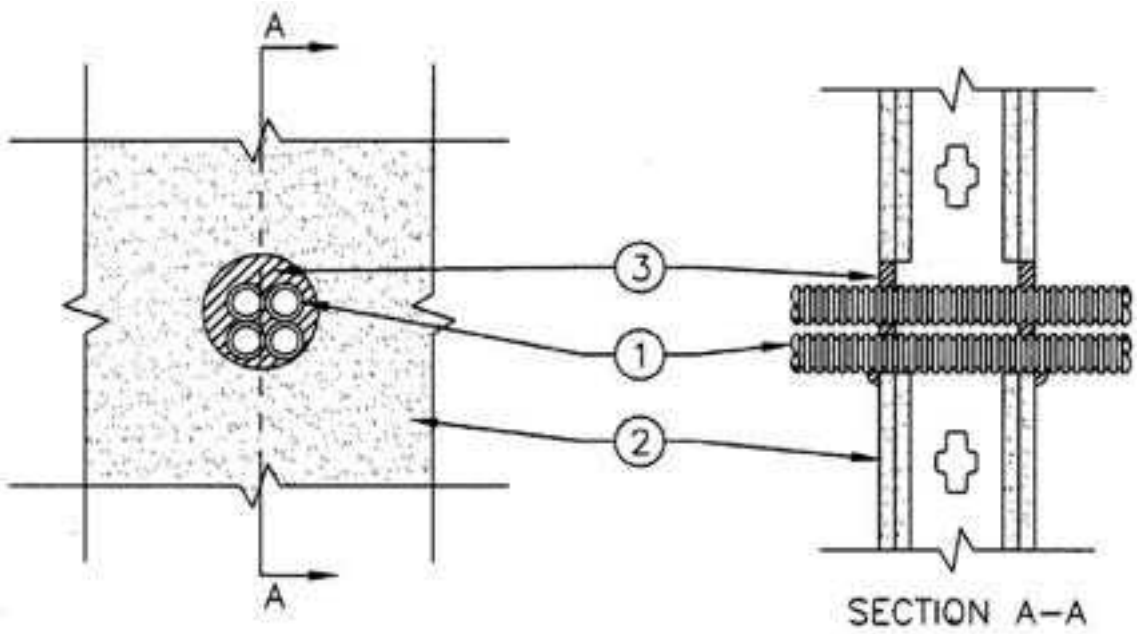

System Design Instructions

1. **Penetrating Item:** Either singly or combination, including all. Centered of offset in hole, see table above. All penetrating items must be reliably supported.
2. **Wall Assemblies:** 2 hour rated ASTM E-119 or CAN/ULC S101 wall assemblies as follows:
   - **a)** Metal or wood framed gypsum board (GWB) wall assemblies.
   - **b)** Cast in place lightweight or normal weight concrete wall assemblies having a minimum cross section thickness of 4-1/2 in.
   - **c)** Hollow or concrete filled unit masonry (concrete block) wall assemblies laid up with mortar having a minimum cross section thickness of 8 in.
3. **Firestop System:** GRABBER CONSTRUCTION PRODUCTS INC. – GrabberGard EFC* or GrabberGard IFC* installed at a minimum thickness of 5/8" within the annulus on both surfaces of wall assembly. Between 0" to 1/4" annular spaces, a 1/2 diameter fillet bead must be placed around the interface between penetrating item and the surface of the wall.

***WH Labeled Component**

ITS Intertek Testing Services

FL0712

Warnock Hersey

Grabber Construction Products
5255 Country Club Drive
Highland, Utah 84003

GrabberGard EFC
GrabberGard IFC

Design No.: JWA/PV 120-07

Single Penetrations
Vertical (walls)
Test Standards: ASTM E-814, UL 1479: open and closed system,
ULC S115-M05**: closed systems
Test Furnace Internal Positive Pressure Differential – 2.5 Pa (0.01 in. of water) Minimum

Penetrating Material & Size	Max Hole Size	Annular Space	Fire "F" Rating	Temp Rating "T" Rating
PVC Plastic Pipe 1-1/2" – 4"	5"	0" – 1/2"	1 & 2 Hr	1 & 2 Hr
ccPVC Plastic Pipe 1-1/2" – 4"	5'	0" – 1/2"	1 & 2 Hr	1 & 2 Hr
CPVC Plastic Pipe 1-1/2" - 4"	5"	0" – 1/2"	1 & 2 Hr	1 & 2 Hr
ccABS Plastic Pipe 1-1/2" - 4"	5"	0" – 1/2"	1 & 2 Hr	38 & 80 Min
ABS Plastic Pipe 1-1/2" - 4"	5"	0" – 1/2"	1 & 2 Hr	38 & 80 Min
FRPP Plastic Pipe 1-1/2" - 4"	5"	0" – 1/2"	1 & 2 Hr	38 & 80 Min

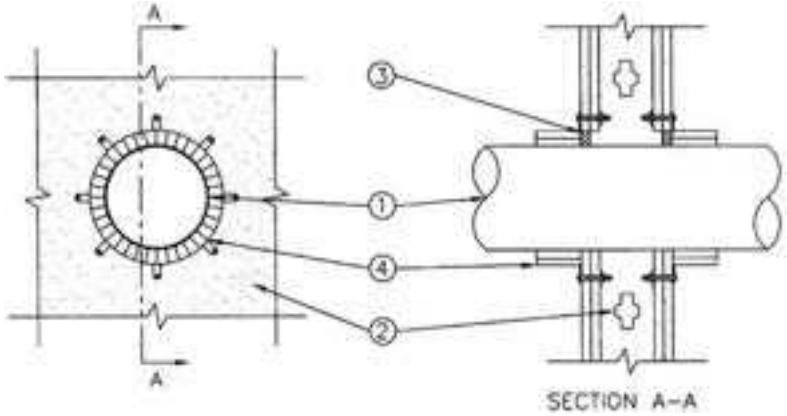

System Design Instructions

1. **Penetrating Item:** Centered or offset in hole, see table above. Single penetrations only, maximum hole size not to exceed table above. Ratings achieved will not be greater than the rating of the wall assembly.

2. **Wall Assembly:**
   - **a)** 1 & 2 hour ASTME-119 or CAN/ULC S101 metal or wood framed fire rated gypsum wall board (GWB) wall fire assemblies framed with 3½" (88mm) studs or;
   - **b)** Cast in place normal or light density concrete wall having a min cross section thickness of 4 1/2" (112 mm) or;
   - **c)** Hollow or concrete filled unit masonry (concrete block) wall assemblies laid up with mortar having a minimum cross section thickness of 8" (200mm)

3. **Firestop System, Component 1:** GRABBER CONSTRUCTION PRODUCTS INC. – GrabberGard EFC* or GrabberGard IFC* installed at a minimum thickness of 5/8" (18mm) within the annulus on both surfaces of wall assembly. On 0 – 1/4" (6mm) annular spaces, a 1/2" (13mm) diameter fillet bead must be placed around the penetrating item.

4. **Firestop System, Component 2:** PFP Partners – Plastic Pipe Collar* (PPC) specifically sized for diameter of pipe. PPC secured to gypsum wall assemblies using 1-1/2" (38 mm) toggle bolts over fender washers, at stud locations use 1-1/2" (38 mm) drywall screws to fasten collar directly to studs. PPC secured to concrete wall assemblies using 1/4"(6 mm) diameter by 1-1/4" (32 mm) long steel masonry anchors over fender washers.

***WH Labeled Component**

**Not tested to 50 Pa pressure differential as required by Canadian code for combustible DWV (Drain, Waste or Vent) piping systems.

ITS Intertek Testing Services

FL0712

Warnock Hersey

Grabber Construction Products
5255 Country Club Drive
Highland, Utah 84003

GrabberGard EFC
GrabberGard IFC

Design No.: JWA/PV 120-08

Single Penetrations
Vertical (wall)
Test Standards: ASTM E-814, UL 1479, ULC S115-M05; open and closed systems
Test Furnace Internal Positive Pressure Differential – 50 Pa (0.20 in. of water) Minimum

1 Hour Fire Rated Wall Systems					
Penetrating Material & Size	Max Hole Size	Annular Space	Fire "F" Rating	Fire/Hose "FH" Rating	Temp Rating "FTH" Rating
PVC Plastic Pipe 1-1/2" – 4"	5"	0" – 1/2"	1 Hr	1 Hr	55 min
XFR PVC (IPEX) Pipe 1-1/2" – 4"	5"	0" – 1/2"	1 Hr	1 Hr	50 min
ccPVC Plastic Pipe 1-1/2" – 4"	5"	0" – 1/2"	1 Hr	1 Hr	55 min
ABS Plastic Pipe 1-1/2" - 4"	4 3/4"	0" – 1/4"	1 Hr	1 Hr	45 min
ccABS Plastic Pipe 1-1/2– 4"	4 3/4"	0" – 1/4"	1 Hr	1 Hr	45 min

2 Hour Fire Rated Wall Systems					
Penetrating Material & Size	Max Hole Size	Annular Space	Fire "F" Rating	Fire/Hose "FH" Rating	Temp Rating "FTH" Rating
PVC Plastic Pipe 1-1/2" – 4"	5"	0" – 1/2"	2 Hr	2 Hr	116 min
XFR PVC (IPEX) Pipe 1-1/2" – 4"	5"	0" – 1/2"	2 Hr	2 Hr	120 min
ccPVC Plastic Pipe 1-1/2" – 4"	5'	0" – 1/2"	2 Hr	2 Hr	116 min
ABS Plastic Pipe 1-1/2" - 4"	4 3/4"	0" – 1/4"	2 Hr	2 Hr	112 min
ccABS Plastic Pipe 1-1/2– 4"	4 3/4"	0" – 1/4"	2 Hr	2 Hr	112 min

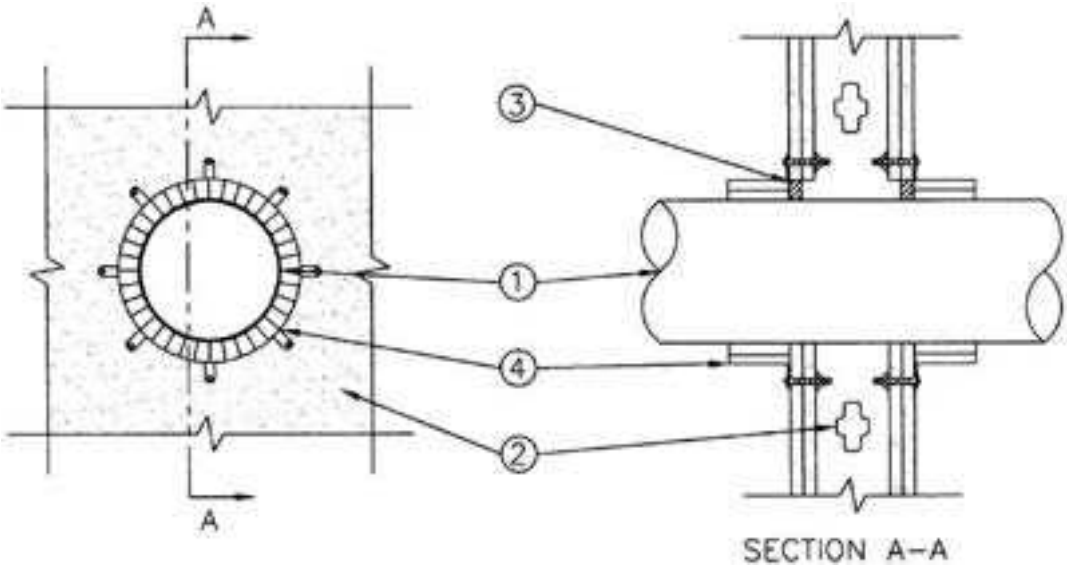

ITS Intertek Testing Services

FL0712

Grabber Construction Products
5255 Country Club Drive
Highland, Utah 84003

GrabberGard EFC
GrabberGard IFC

JWA/PV 120-08

System Design Instructions

1. **Penetrating Item:** Centered or offset in hole, see table above. Single penetrations only, maximum hole size not to exceed tables above. Ratings achieved will not be greater than that of the wall assembly.

2. **Wall Fire Separations:**
   - **a)** 1 or 2 hour CAN/ULC S101 or ASTM E119 equivalent metal or wood framed fire rated gypsum wall board (GWB) wall fire separations framed with 3½" (88mm) studs or;
   - **b)** Cast in place normal or light density concrete wall having a min cross section thickness of 4 ½ " (112mm) or;
   - **c)** Hollow or concrete filled unit masonry (concrete block) wall assemblies laid up with mortar having a minimum cross section thickness of 8" (200mm)

3. **Firestop System, Component 1:** GRABBER CONSTRUCTION PRODUCTS – GrabberGard EFC* or GrabberGard IFC* installed at a minimum thickness of 5/8" (18 mm) within the annulus on both surfaces of wall assembly. On 0 – 1/4" (6 mm) annular spaces, a 1/2" (13 mm) diameter fillet bead must be placed around the penetrating item.

4. **Firestop System, Component 2:** PFP Partners – Plastic Pipe Collar* (PPC) specifically sized for diameter of pipe. PPC secured to gypsum wall assemblies using 1-1/2" (38 mm) toggle bolts over fender washers, at stud locations use 1-1/2" (38 mm) drywall screws to fasten collar directly to studs. PPC secured to concrete wall assemblies using 1/4" (6 mm) diameter by 1-1/4" (32 mm) long steel masonry anchors over fender washers.

***WH Labeled Component**

Warnock Hersey

Grabber Construction Products
5255 Country Club Drive
Highland, Utah 84003

GrabberGard EFC

Design No. JWA/PV 240-01

Concrete Deck to Vertical Wall Assemblies
Test Standards: ASTM E-814, UL 2079, CAN/ULC S115-M05
L-Rating At Ambient < 1 CFM/Lin Ft
L-Rating At 400° F < 1 CFM/Lin Ft
Test Furnace Internal Positive Pressure Differential – 2.5 Pa (0.01 in. of water) Minimum
Max. Joint Movement – 12.5% Compression or Extension

Construction Joint	UL 2079		CAN/ULC S115-M05		
	Max Width	Assembly Rating	Fire "F" Rating	Fire/Hose "FH" Rating	Temperature "FTH" Rating
Horizontal Joints	2" (51 mm)	4 Hrs	4 Hrs	4 Hrs	4 Hrs

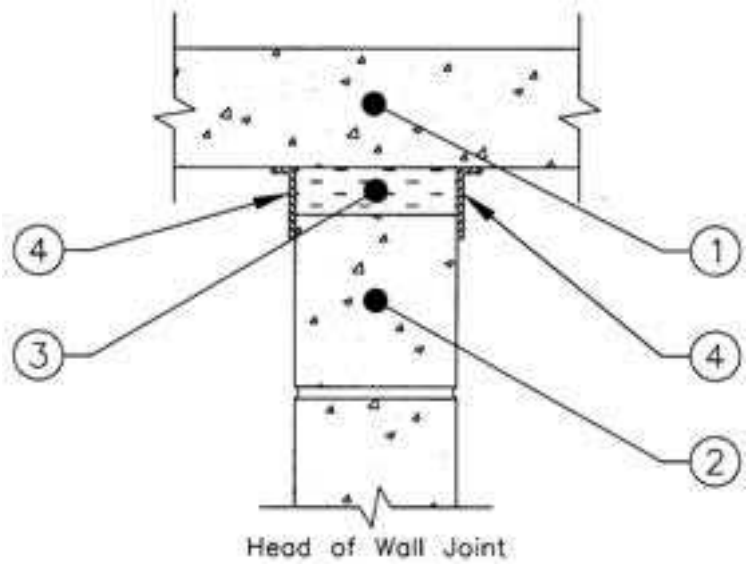

System Design Instructions

1. **Floor/Ceiling Assemblies:** Cast in place normal or light density concrete floor/ceiling assemblies having a minimum cross section thickness of 5" (125 mm).
2. **Wall Assemblies:** ASTM E-119 or CAN/ULC S101 up to 4 hour rated wall assemblies conforming to as follows:
   a) Cast in place concrete wall assemblies having a minimum cross section thickness of 6-3/4" (171mm) or;
   b) Hollow or concrete filled unit masonry (concrete block) wall assemblies laid up with mortar having a minimum cross section thickness of 8" (200mm).
3. **Firestop System** – Component 1 – Filler material mineral rock wool or ceramic fiber insulation with a min density of 4 PCF (64 kg/m3) compressed a minimum of 40% into the joint space flush with both sides of wall assembly.
4. **Firestop System** – Component 2 – GRABBER CONSTRUCTION PRODUCTS INC. – GrabberGard EFS* – Minimum dry film thickness 1/16" (1.5mm) sprayed or brushed into place completely covering fillet material and overlapping onto all concrete surface a minimum of 1" (25mm).

***WH Labeled Component**

ITS Intertek Testing Services

FL0712

Warnock Hersey

Grabber Construction Products
5255 Country Club Drive
Highland, Utah 84003

GrabberGard EFC
GrabberGard IFC

Design No.: JWA/PV 240-02

Single and Multiple Through Penetrations
Vertical (wall)
ASTM E-814, UL 1479: open and closed system, ULC S115-M05**: closed systems
Test Furnace Internal Positive Pressure Differential – 2.5 Pa (0.01 in. of water) Minimum

Penetrating Material & Size	Annular Space	E814 & UL 1479		CAN/ULC S 115-M05		
		Fire/Hose "F" Rating	Temp "T" Rating	Fire "F" Rating	Fire/Hose "FH" Rating	Temp "FTH" Rating
1. PVC** or CPVC** Pipe up to 3" ID Sch 40 (Closed or Open System)	3/4" – 2"	4 Hr	240 min	4 Hr	4 Hr	240 min
2. EMT/Steel Conduit and Pipe up to 4" ID Sch 40	3/4" – 2"	4 Hr	58 min	4 Hr	4 Hr	58 min
3. Copper Pipe and Tubing up to 4" ID	3/4" – 2"	4 Hr	23 min	4 Hr	4 Hr	23 min
4. Multiple MC/Teck Cable with or without PVC jacket up to 2" OD	3/4" – 2"	4 Hr	204 min	4 Hr	4 Hr	204 min

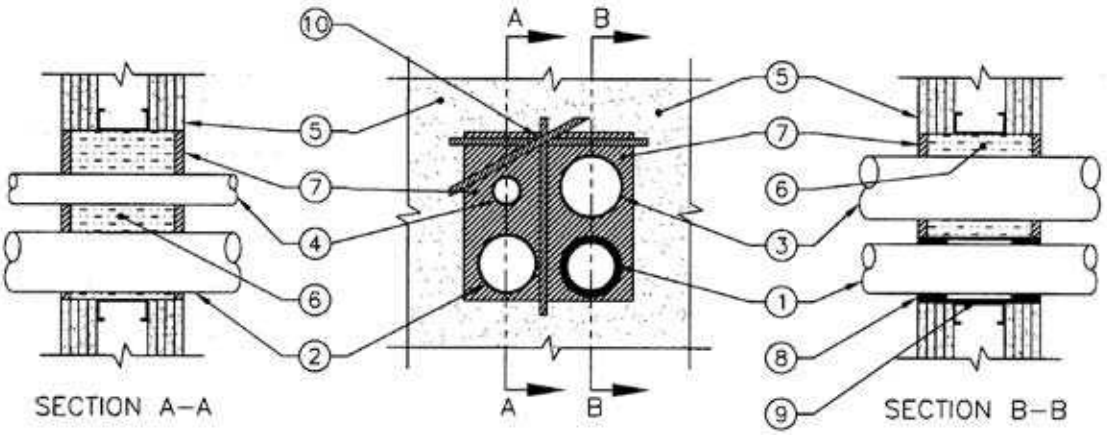

System Design Instructions

1 – 4. **Penetrating Items:** 1 – 4 from table, either singly or combination, including all. The annular space between penetrants and to periphery of the opening are to be min 3/4 in. (19 mm) to max 2 in. (50 mm). The maximum opening is 144 in.2 (0.09 m2). All penetrating items must be reliably supported.

5. **Wall Assembly:** 4 hour rated ASTM E-119 or CAN/ULC S101 wall assemblies as follows:

a) Metal or wood framed gypsum wall board (GWB) wall assemblies with opening within the wall assembly completely framed to form a rectangular box or;
b) Cast in place concrete wall assemblies having a minimum cross section thickness of 6" (150mm) or;
c) Hollow or concrete filled unit masonry (concrete block) wall assemblies laid up with mortar having a minimum cross section thickness of 8" (200mm).

6. **Firestop System Component 1:** Filler Material, mineral rock wool or ceramic fiber insulation with a minimum density of 4 PCF (64 kg/m3) compressed a minimum of 25% into the annular space at a minimum depth of 7" (88mm). Recess filler material 5/8" (16mm) for sealant placement (Item No. 7).

7. **Firestop System Component 2:** GRABBER CONSTRUCTION PRODUCTS INC. – GrabberGard EFC* or GrabberGard IFC* each product must be installed at a minimum wet film thickness of 5/8" (16mm).

8. **Firestop System Component 3:** PFP Partners – Wrap Strip WS1* – Nominal 1/8 in. (3 mm) thick intumescent material supplied in 2 in. (51 mm) wide strips. Min three continuous layers of wrap strip around the circumference of the PVC pipe applied on each side of wall assembly. Use aluminum foil tape installed around the circumference of the outer wrap strip and pipe assembly for securing wrap strips in place.

ITS Intertek Testing Services

FL0712

Grabber Construction Products
5255 Country Club Drive
Highland, Utah 84003

GrabberGard EFC
GrabberGard IFC

JWA/PV 240-02

9. Firestop System Component 4: Min 30 gauge sheet metal sleeve to be tightly fitted to the outer wrap strip and pipe assembly. Sheet metal sleeve cut to overlap a min of 1 in., flush with exterior surface of wall assembly. Sleeve secured to wrap strip and pipe assembly be use of two hose clamps located a min of 1 in. from either end of sleeve.
10. Firestop System Component 5: For use when annular space exceeds 2 in. (51 mm) – Strips of min 1/2 in. (13 mm) wide strips of min 26 gauge galv. sheet metal strips attached on both sides of the wall, such that the annular space between periphery and strip and/or penetration and strip is max 2 in. (13 mm).

***WH Labeled Component**

**Not tested to 50pa pressure differential as required by Canadian code for combustible DWV (Drain, Waste or Vent) piping systems.

Understanding a ITS - OPL - Joint Systems

ITS - Omega Point Laboratories uses an Alpha/Alpha-numeric identification systems

First Alpha Componet - Manufacturer's Code

Example

JWA/JS 120-01
Grabber Construction Products

Second Alpha Componet - Joint System Code

Example

JWA/JS 120-01
Perimeter Fire Containment Joint System

First Numerical Componet - Hourly Rating Code

Example

JWA/JS 120-01
060 – 60 minutes (1 hour)
120 – 120 minutes (2 hours)
180 – 180 minutes (3 hours)
240 – 240 minutes (4 hours)

Second Numerical Componet - System Number

Example

JWA/JS 120-01
1st JS system for that firestop manufacturing company

JWA/JS 120-01
CEJ 600 P
PERIMETER JOINT PROTECTION

CERTIFIED PRODUCT: Grabbergard EFS
ASTM E 2307-04
T-Rating – 1-1/4 hr.
F-Rating – 2 hr.
ASTM E 1966-01
CYCLING TYPE IV: ± 16.7% Horizontal Movement @ 33.34% Compression (Reference Item 3A)

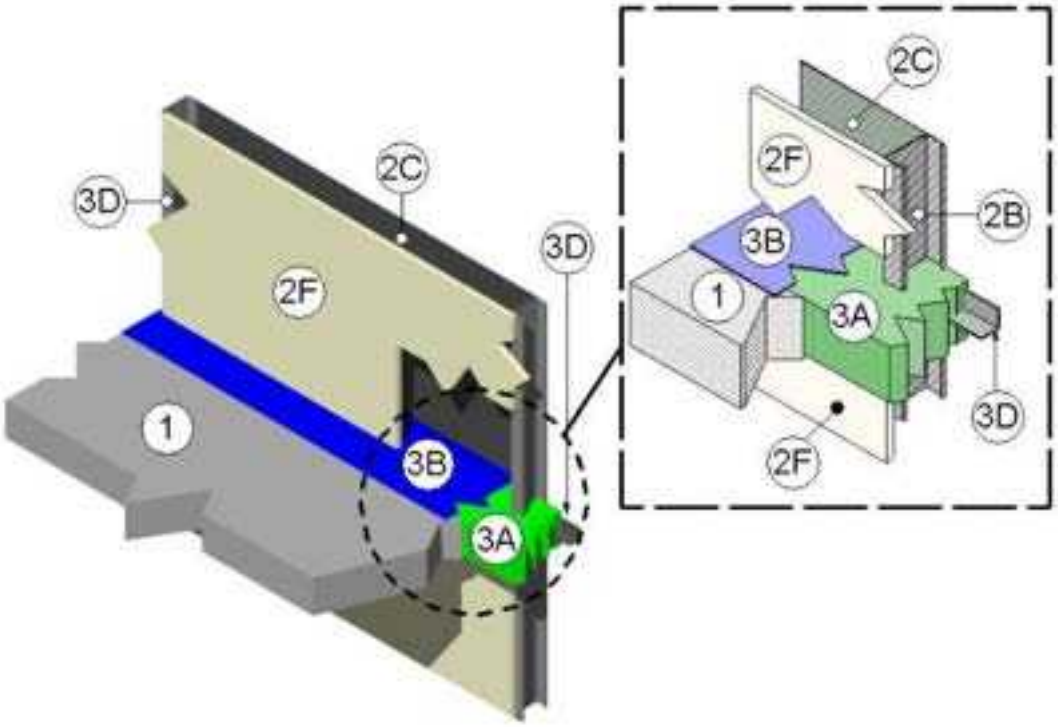

1. **FLOOR ASSEMBLY** – The floor assembly consists of the following construction features:
   A. Two-hour rated reinforced concrete slab using either nominal density 100 pcf lightweight or nominal density 150 pcf normal weight concrete with a minimum thickness of 4-1/2-inches.
   B. When required to accommodate the installation of an architectural joint system, increase overall concrete slab (Item 1A) thickness. Maintain minimum 4-1/2-inch thickness below blockout (longitudinal recesses) formed in the concrete slab (Item 1A) to accommodate the architectural joint system. Vary blockout width without restriction.
2. **CURTAIN WALL ASSEMBLY:** The curtain wall assembly incorporates the following construction features:
   A. Mounting Attachment: (Not Shown) Attach curtain wall framing to the structural framing according to the curtain wall manufacturer's instructions. When required, connect the mounting attachments to the floor slab to the joint face of the floor slab, according to the curtain wall manufacturer's instructions. Maximum 10-foot distance between mounting attachments.

Division 07-Thermal and Moisture Protection
07 84 00 Firestopping
07 84 43 Fire-Resistance Joint sealants

A. **Steel-Stud Framing:** Erect vertical framing members using a minimum 3-5/8 inch by 1-1/4 inch, 18 GA steel "C" studs. Erect vertical framing, and when required install horizontal framing members, according to the curtain wall system manufacturer's guidelines. Maximum 48 inch on center vertical framing spacing.

B. **Steel Panels:** Attach minimum 20 GA sheet steel with maximum dimensions of 48 inches by 144 inches to steel-stud framing (Item 2B) according to the curtain wall system manufacturer's guidelines or using self-tapping 1-inch pan head framing screws, spaced nominally 8 inches on center.

C. **Impaling Pins:** (Not Shown – Optional) Install perimeter joint treatment (Item 3) before this material. Use impaling pins with curtain wall insulation (Item 2E). Position, size and install pins according to the curtain wall system manufacturer's guidelines.

D. **Curtain Wall Insulation:** (Not Shown –Optional) Install perimeter joint treatment (Item 3) before this material. Use only materials bearing an Intertek Certified Product Label and meeting the following minimum requirements. Use mineral wool or fiberglass batt insulation. Do not deform the perimeter joint treatment (Item 3) during or after installation of curtain wall insulation.

E. **Interior Curtain Wall Surface**: Install perimeter joint treatment (Item 3) before this material. Cover interior face of steel-stud framing (Item 2B) with one layer of minimum 5/8 inch thick, Type X gypsum board. Fasten gypsum board to steel-stud framing (Item 2B) with minimum #6 1-1/8 inches long bugle-head phillips drywall screws spaced 12 inches on center.

i. **Joint Tape and Compound** – Apply vinyl or casein, dry or premixed joint compound to face layer of gypsum board (Item 2F) in two coats to all exposed screw heads and gypsum board steel-stud framing (Item 2B) butt joints. A minimum 2-inch wide paper, plastic or fiberglass tape embedded in first layer of compound over joints in gypsum board (Item 2F).

ii. Create a minimum 3-5/8 inch cavity between unexposed side of gypsum wallboard (Item 2F) to unexposed side of steel panel (Item 2C).

1. **PERIMETER JOINT TREATMENT** – Maximum 8 inch nominal joint width (joint width at installation) of perimeter joint (linear opening). Perimeter joint treatment incorporates the following construction features:

A. **Packing Material** – Use only materials bearing an Intertek Certified Product Label and meeting the following minimum requirements. Use a minimum 4 inch thick, 4 pcf density, mineral wool batt insulation installed to fill all openings with the fibers running parallel to the concrete slab (Item 1A) edge and curtain wall assembly (Item 2). Compress packing material 33.34% in the nominal joint width. Install top of packing material flush with the top surface of the concrete slab (Item 1A). Tightly compress together splices (butt joints) in the lengths of packing material.

B. **CERTIFIED MANUFACTURER:**
Grabber Construction Products
CERTIFIED PRODUCT: Sealant
MODEL: Grabbergard EFS

Fill, Void or Cavity Material – Apply sealant, (sprayed, brushed, or painted), to cover the top exposed surface of the packing material (Item 3A) compressed in the perimeter joint. Apply a minimum dry film thickness of 1/16 inch and overlap sealant a minimum 1 inch onto the adjacent curtain wall assembly (Item 2) and floor assembly (Item 1). After stopping the application process, and when the applied liquid cures to an elastomeric film before process is restarted, then overlap the edge of the cured sealant at least 1/8 inch with the new sealant being applied.

C. **Support Clips:** (Not Shown – Optional) Recommend use of support clips for when vertical movement required. Standard Z-shaped clips consist of 20 GA galvanized steel with the following dimensions: 1 inch wide by 3 inch high with a 2 inch upper leg and 3 inch lower leg.

D. **Support Angle:** Horizontally install a minimum 24 GA 1.5 inch x 1.5 inch steel angle mechanically fastened to the interior of the steel panels (Item 2C) and steel-stud framing (Item 2B) at the mid point location of the packing material (Item 3A).

Division 07-Thermal and Moisture Protection
07 84 00 Firestopping
07 84 43 Fire-Resistance Joint sealants

JWA/JS 120-02
CEJ 601 P
PERIMETER JOINT PROTECTION

CERTIFIED PRODUCT: Grabbergard EFS
ASTM E 2307-04
T-Rating – 3/4 hr.
F-Rating – 2 hr.
ASTM E 1966-01
CYCLING TYPE IV: ± 16.7% Horizontal Movement @ 33.34% Compression (Reference Item 3A)

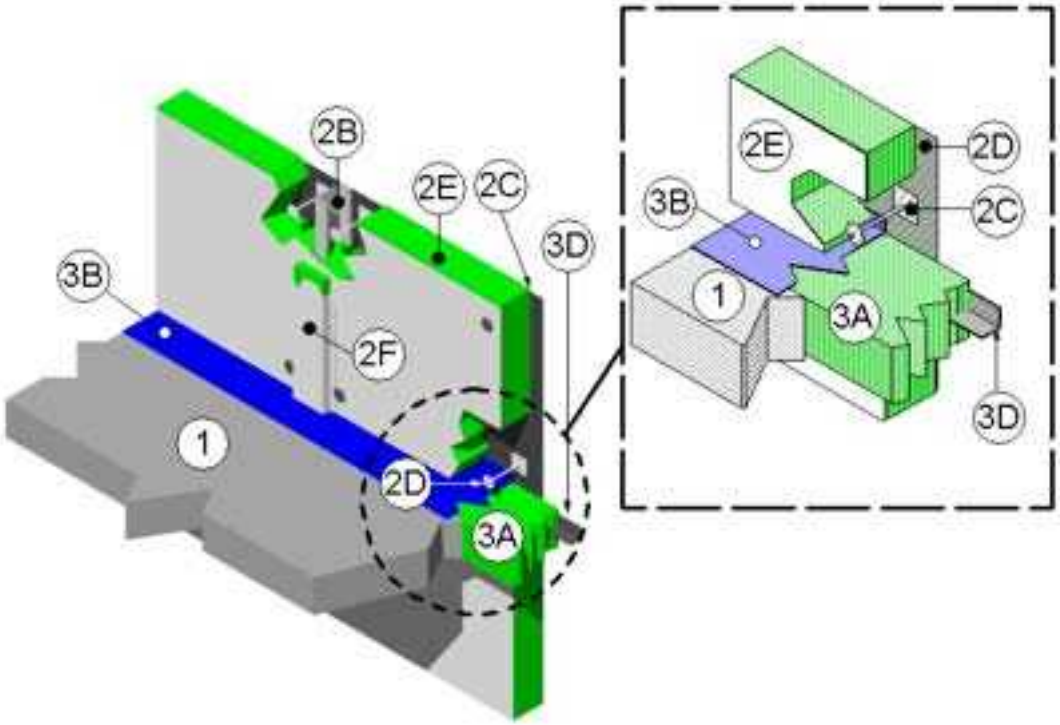

1. **FLOOR ASSEMBLY** – The floor assembly consists of the following construction features:
   - **A.** Two-hour rated reinforced concrete slab using either nominal density 100 pcf lightweight or nominal density 150 pcf normal weight concrete with a minimum thickness of 4-1/2-inches.
   - **B.** When required to accommodate the installation of an architectural joint system, increase overall concrete slab (Item 1A) thickness. Maintain minimum 4-1/2-inch thickness below blockout (longitudinal recesses) formed in the concrete slab (Item 1A) to accommodate the architectural joint system. Vary blockout width without restriction.
2. **CURTAIN WALL ASSEMBLY:** The curtain wall assembly incorporates the following construction features:
   - **A. Mounting Attachment:** (Not Shown) Attach curtain wall framing to the structural framing according to the curtain wall manufacturer's instructions. When required, connect the mounting attachments to the floor slab to the joint face of the floor slab, according to the curtain wall manufacturer's instructions. Maximum 10-foot distance between mounting attachments.

B. Steel-Stud Framing: Erect vertical framing members using a minimum 3-5/8 inch by 1-1/4 inch, 18 GA steel "C" studs. Erect vertical framing, and when required install horizontal framing members, according to the curtain wall system manufacturer's guidelines. Maximum 48 inch on center vertical framing spacing.

C. Steel Panels: Attach minimum 20 GA sheet steel with maximum dimensions of 48 inches by 144 inches to steel-stud framing (Item 2B) according to the curtain wall system manufacturer's guidelines or using self-tapping 1-inch pan head framing screws, spaced nominally 8 inches on center.

D.Impaling Pins: Install perimeter joint protection (Item 3) before this material. Option to steel angle (Item 2Ei), use impaling pins with curtain wall insulation (Item 2E). Position, size and install pins according to the curtain wall system manufacturer's guidelines or be a minimum 4-1/2 inches long, 12 GA steel pin, attached to a nominal 2 by 2 inch galvanized sheet steel plate, a nominal 2 by 2 by 2 inch long angle, or directly attached to steel panel (Item 2C) using a stud gun. Space pins a maximum of 12 inches on center and installed around the periphery (minimum). Install the interior face of the curtain wall insulation (Item 2E) flush with the interior face of the steel-stud framing (Item 2C) and steel panels (Item 2D).

E. Curtain Wall Insulation: Install perimeter joint protection (Item 3) before this material. Use only materials bearing an Intertek Certified Product Label and meeting the following minimum requirements. Do not deform the perimeter joint treatment (Item 3) during or after installation of curtain wall insulation. Use a nominal 4 inch thick 4 pcf or nominal 2 inch thick 8 pcf mineral wool batt insulation faced on one side with aluminum foil scrim (vapor retarder) exposed to the room's interior.

i. Attach a minimum 16 GA 2 x 2 inch steel angle around the entire perimeter of each piece of curtain wall insulation. Attach the vertical 16 GA 2 x 2 inch steel angles to the mullions with screws spaced a maximum 8 inches on center.

ii. At the horizontal butt joints of the curtain wall insulation in the field of the steel panels (Item 2C), Place the horizontal angles back to back to form a "T". Locate all horizontal seams in the curtain wall insulation a minimum 6 inches from the top surface of the perimeter joint protection (Item 3).

iii. Fit curtain wall insulation tightly between vertical and horizontal angles and secure with screws placed a maximum 8 inches on center. Install the curtain wall insulation flush with the interior face of the steel-stud framing (Item 2B). Install the minimum 24-inch wide curtain wall insulation without vertical seams. Fill the spandrel panel area completely. Fill the cavity of all "C"-shaped studs with curtain wall insulation. Seal all meeting edges of curtain wall insulation with nominal 4-inch wide pressure sensitive aluminum foil faced tape centered over the junction so that approximately 2 inches of tape covers each edge of the adjacent curtain wall insulation. Do not deform the perimeter joint protection (Item 3) during or after installation of curtain wall insulation.

F. Framing Covers: Install perimeter joint protection (Item 3) before this material. Use only materials bearing an Intertek Certified Product Label and meeting the following minimum requirements. Do not deform the perimeter joint treatment (Item 3) during or after installation of framing covers. Use Strips minimum 1 inch thick by 4 inch wide, 8 pcf, mineral wool batt insulation faced on one side with aluminum foil scrim (vapor retarder) exposed to the room's interior. Center framing covers over each vertical framing member and secured to the member with impaling pins (Item 2D) spaced nominally 12 inches. Do not pass framing covers through the perimeter joint treatment. Butt framing covers to the top and bottom surfaces of the perimeter joint treatment.

3. PERIMETER JOINT PROTECTION – Maximum 8 inch nominal joint width (joint width at installation) of perimeter joint (linear opening). Perimeter joint protection incorporates the following construction features:

A. Packing Material – Use only materials bearing an Intertek Certified Product Label and meeting the following minimum requirements. Use a minimum 4 inch thick, 4 pcf density, mineral wool batt insulation installed to fill all openings with the fibers running parallel to the concrete slab (Item 1A) edge and curtain wall assembly (Item 2). Compress packing material 33.34% in the nominal joint width. Install top of packing material flush with the top surface of the concrete slab (Item 1A). Tightly compress together splices (butt joints) in the lengths of packing material.

Division 07-Thermal and Moisture Protection
07 84 00 Firestopping
07 84 43 Fire-Resistance Joint sealants

B. CERTIFIED MANUFACTURER:
Grabber Construction Products
CERTIFIED PRODUCT: Sealant
MODEL: Grabbergard EFS

Fill, Void or Cavity Material – Apply sealant, (sprayed, brushed, or painted), to cover the top exposed surface of the packing material (Item 3A) compressed in the perimeter joint. Apply a minimum dry film thickness of 1/16 inch and overlap sealant a minimum 1 inch onto the adjacent curtain wall assembly (Item 2) and floor assembly (Item 1). After stopping the application process, and when the applied liquid cures to an elastomeric film before process is restarted, then overlap the edge of the cured sealant at least 1/8 inch with the new sealant being applied.

C. Support Clips: (Not Shown – Optional) Recommend use of support clips for when vertical movement required. Standard Z-shaped clips consist of 20 GA galvanized steel with the following dimensions: 1 inch wide by 3 inch high with a 2 inch upper leg and 3 inch lower leg.

D. Support Angle: Horizontally install a minimum 24 GA 1.5 inch x 1.5 inch steel angle mechanically fastened to the interior of the steel panels (Item 2C) and steel-stud framing (Item 2B) at the mid point location of the packing material (Item 3A).

Division 07-Thermal and Moisture Protection
07 84 00 Firestopping
07 84 43 Fire-Resistance Joint sealants

JWA/JS 120-03
CEJ 602 P
PERIMETER JOINT PROTECTION

CERTIFIED PRODUCT: Grabbergard EFS
ASTM E 2307-04
T-Rating – 1-1/4 hr.
F-Rating – 2 hr.
ASTM E 1966-01
CYCLING TYPE IV: ± 16.7% Horizontal Movement @ 33.34% Compression (Reference Item 3A)

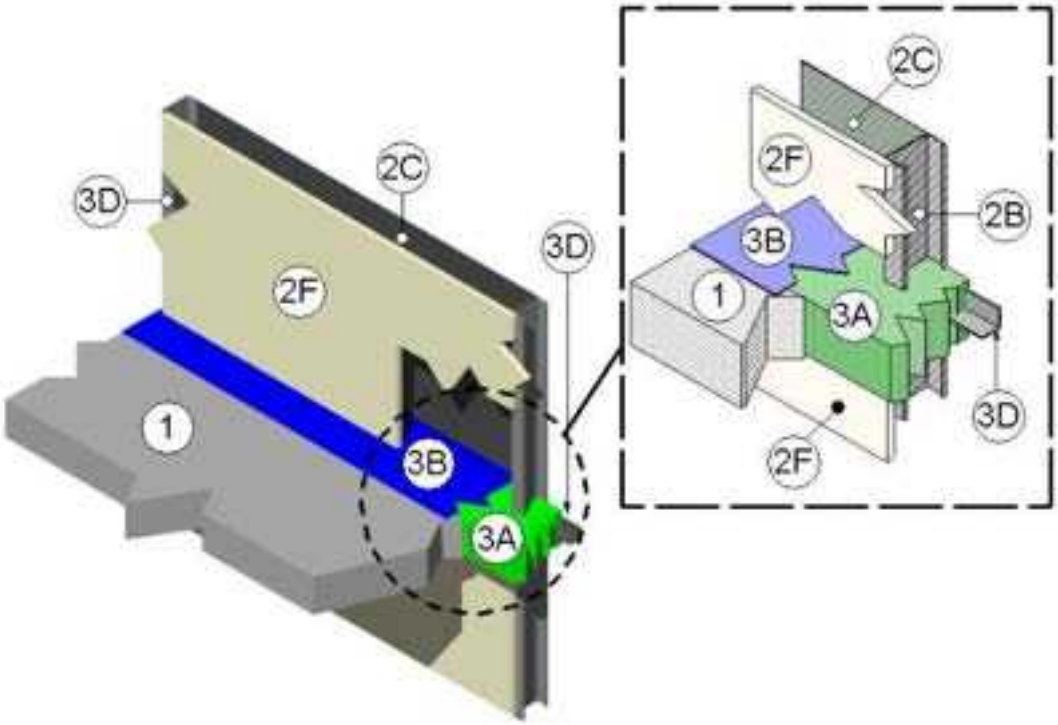

1. **FLOOR ASSEMBLY** – The floor assembly consists of the following construction features:
   - **A.** Two-hour rated reinforced concrete slab using either nominal density 100 pcf lightweight or nominal density 150 pcf normal weight concrete with a minimum thickness of 4-1/2-inches.
   - **B.** When required to accommodate the installation of an architectural joint system, increase overall concrete slab (Item 1A) thickness. Maintain minimum 4-1/2-inch thickness below blockout (longitudinal recesses) formed in the concrete slab (Item 1A) to accommodate the architectural joint system. Vary blockout width without restriction.
2. **CURTAIN WALL ASSEMBLY:** The curtain wall assembly incorporates the following construction features:
   - **A.** Mounting Attachment: (Not Shown) Attach curtain wall framing to the structural framing according to the curtain wall manufacturer's instructions. When required, connect the mounting attachments to the floor slab to the joint face of the floor slab, according to the curtain wall manufacturer's instructions. Maximum 10-foot distance between mounting attachments.

B. **Steel-Stud Framing:** Erect vertical framing members using a minimum 3-5/8 inch by 1-1/4 inch, 18 GA steel "C" studs. Erect vertical framing, and when required install horizontal framing members, according to the curtain wall system manufacturer's guidelines. Maximum 48 inch on center vertical framing spacing.

C. **Steel Panels:** Attach minimum 20 GA sheet steel with maximum dimensions of 48 inches by 144 inches to steel-stud framing (Item 2B) according to the curtain wall system manufacturer's guidelines or using self-tapping 1-inch pan head framing screws, spaced nominally 8 inches on center.

D. **Impaling Pins:** (Not Shown – Optional) Install perimeter joint treatment (Item 3) before this material. Use impaling pins with curtain wall insulation (Item 2E). Position, size and install pins according to the curtain wall system manufacturer's guidelines.

E. **CERTIFIED MANUFACTURER:**
Rock Wool Manufacturing Company
CERTIFIED PRODUCT: Insulation Mineral Wool
MODEL: DELTA® Mineral Wool Curtain Wall Insulation

Curtain Wall Insulation: (Not Shown –Optional) Install perimeter joint treatment (Item 3) before this material. Use mineral wool or fiberglass batt insulation. Do not deform the perimeter joint treatment (Item 3) during or after installation of curtain wall insulation.

F. **Interior Curtain Wall Surface:** Install perimeter joint treatment (Item 3) before this material. Cover interior face of steel-stud framing (Item 2B) with one layer of minimum 5/8 inch thick, Type X gypsum board. Fasten gypsum board to steel-stud framing (Item 2B) with minimum #6 1-1/8 inches long bugle-head phillips drywall screws spaced 12 inches on center.

i. Joint Tape and Compound – Apply vinyl or casein, dry or premixed joint compound to face layer of gypsum board (Item 2F) in two coats to all exposed screw heads and gypsum board steel-stud framing (Item 2B) butt joints. A minimum 2-inch wide paper, plastic or fiberglass tape embedded in first layer of compound over joints in gypsum board (Item 2F).

ii. Create a minimum 3-5/8 inch cavity between unexposed side of gypsum wallboard (Item 2F) to unexposed side of steel panel (Item 2C).

3. **PERIMETER JOINT TREATMENT** – Maximum 8 inch nominal joint width (joint width at installation) of perimeter joint (linear opening). Perimeter joint treatment incorporates the following construction features:

A. **Packing Material** – Use a minimum 4 inch thick, 4 pcf density, mineral wool batt insulation installed to fill all openings with the fibers running parallel to the concrete slab (Item 1A) edge and curtain wall assembly (Item 2). Compress packing material 33.34% in the nominal joint width. Install top of packing material flush with the top surface of the concrete slab (Item 1A). Tightly compress together splices (butt joints) in the lengths of packing material.

B. **CERTIFIED MANUFACTURER:**
Grabber Construction Products
CERTIFIED PRODUCT: Sealant
MODEL: Grabbergard EFS

Fill, Void or Cavity Material – Apply sealant, (sprayed, brushed, or painted), to cover the top exposed surface of the packing material (Item 3A) compressed in the perimeter joint. Apply a minimum dry film thickness of 1/16 inch and overlap sealant a minimum 1 inch onto the adjacent curtain wall assembly (Item 2) and floor assembly (Item 1). After stopping the application process, and when the applied liquid cures to an elastomeric film before process is restarted, then overlap the edge of the cured sealant at least 1/8 inch with the new sealant being applied.

C. **Support Clips:** (Not Shown – Optional) Recommend use of support clips for when vertical movement required. Standard Z-shaped clips consist of 20 GA galvanized steel with the following dimensions: 1 inch wide by 3 inch high with a 2 inch upper leg and 3 inch lower leg.

D. **Support Angle:** Horizontally install a minimum 24 GA 1.5 inch x 1.5 inch steel angle mechanically fastened to the interior of the steel panels (Item 2C) and steel-stud framing (Item 2B) at the mid point location of the packing material (Item 3A).

Division 07-Thermal and Moisture Protection
07 84 00 Firestopping
07 84 43 Fire-Resistance Joint sealants

JWA/JS 120-04
CEJ 603 P
PERIMETER JOINT PROTECTION

CERTIFIED PRODUCT: Grabbergard EFS
ASTM E 2307-04
T-Rating – 1/4 hr.
F-Rating – 2 hr.
ASTM E 1966-01
CYCLING TYPE IV: ± 16.7% Horizontal Movement @ 33.34% Compression (Reference Item 3A)

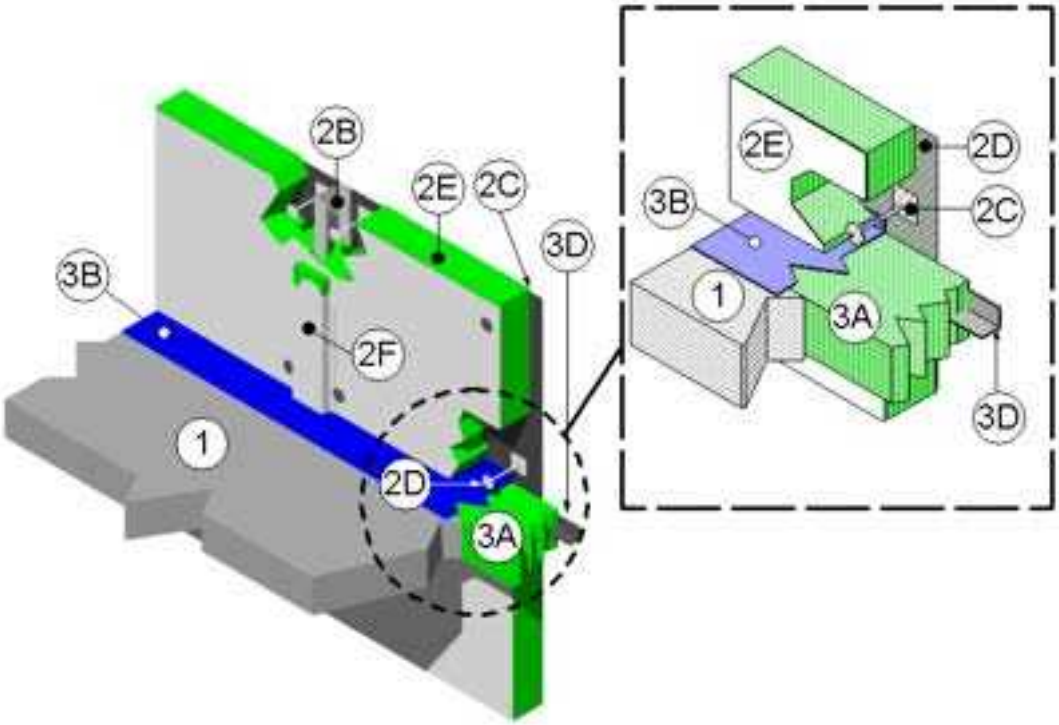

1. **FLOOR ASSEMBLY** – The floor assembly consists of the following construction features:
   - **A.** Two-hour rated reinforced concrete slab using either nominal density 100 pcf lightweight or nominal density 150 pcf normal weight concrete with a minimum thickness of 4-1/2-inches.
   - **B.** When required to accommodate the installation of an architectural joint system, increase overall concrete slab (Item 1A) thickness. Maintain minimum 4-1/2-inch thickness below blockout (longitudinal recesses) formed in the concrete slab (Item 1A) to accommodate the architectural joint system. Vary blockout width without restriction.
2. **CURTAIN WALL ASSEMBLY:** The curtain wall assembly incorporates the following construction features:
   - **A. Mounting Attachment:** (Not Shown) Attach curtain wall framing to the structural framing according to the curtain wall manufacturer's instructions. When required, connect the mounting attachments to the floor slab to the joint face of the floor slab, according to the curtain wall manufacturer's instructions. Maximum 10-foot distance between mounting attachments.

Division 07-Thermal and Moisture Protection
07 84 00 Firestopping
07 84 43 Fire-Resistance Joint sealants

B. **Steel-Stud Framing:** Erect vertical framing members using a minimum 3-5/8 inch by 1-1/4 inch, 18 GA steel "C" studs. Erect vertical framing, and when required install horizontal framing members, according to the curtain wall system manufacturer's guidelines. Maximum 48 inch on center vertical framing spacing.

C. **Steel Panels:** Attach minimum 20 GA sheet steel with maximum dimensions of 48 inches by 144 inches to steel-stud framing (Item 2B) according to the curtain wall system manufacturer's guidelines or using self-tapping 1-inch pan head framing screws, spaced nominally 8 inches on center.

D. **Impaling Pins:** Install perimeter joint protection (Item 3) before this material. Option to steel angle (Item 2i), use impaling pins with curtain wall insulation (Item 2E). Position, size and install pins according to the curtain wall system manufacturer's guidelines or be a minimum 4-1/2 inches long, 12 GA steel pin, attached to a nominal 2 by 2 inch galvanized sheet steel plate, a nominal 2 by 2 by 2 inch long angle, or directly attached to steel panel (Item 2D) using a stud gun. Space pins a maximum of 12 inches on center and installed around the periphery (minimum). Install the interior face of the curtain wall insulation (Item 2E) flush with the interior face of the steel-stud framing (Item 2C) and steel panels (Item 2D).

E. **CERTIFIED MANUFACTURER:**

Rock Wool Manufacturing Company
CERTIFIED PRODUCT: Insulation Mineral Wool
MODEL: DELTA® Mineral Wool Curtain Wall Insulation

Curtain Wall Insulation: Install perimeter joint protection (Item 3) before this material. Use only materials bearing an Intertek Certified Product Label and meeting the following minimum requirements. Do not deform the perimeter joint treatment (Item 3) during or after installation of curtain wall insulation. Use a nominal 4 inch thick 4 pcf or nominal 2 inch thick 8 pcf mineral wool batt insulation faced on one side with aluminum foil scrim (vapor retarder) exposed to the room's interior.

i. Attach a minimum 16 GA 2 x 2 inch steel angle around the entire perimeter of each piece of curtain wall insulation. Attach the vertical 16 GA 2 x 2 inch steel angles to the mullions with screws spaced a maximum 8 inches on center.

ii. At the horizontal butt joints of the curtain wall insulation in the field of the steel panels (Item 2C), Place the horizontal angles back to back to form a "T". Locate all horizontal seams in the curtain wall insulation a minimum 6 inches from the top surface of the perimeter joint protection (Item 3).

iii. Fit curtain wall insulation tightly between vertical and horizontal angles and secure with screws placed a maximum 8 inches on center. Install the curtain wall insulation flush with the interior face of the steel-stud framing (Item 2B). Install the minimum 24-inch wide curtain wall insulation without vertical seams. Fill the spandrel panel area completely. Fill the cavity of all "C"-shaped studs with curtain wall insulation. Seal all meeting edges of curtain wall insulation with nominal 4-inch wide pressure sensitive aluminum foil faced tape centered over the junction so that approximately 2 inches of tape covers each edge of the adjacent curtain wall insulation. Do not deform the perimeter joint protection (Item 3) during or after installation of curtain wall insulation.

F. **Framing Covers:** Install perimeter joint protection (Item 3) before this material. Use only materials bearing an Intertek Certified Product Label and meeting the following minimum requirements. Do not deform the perimeter joint treatment (Item 3) during or after installation of framing covers. Use Strips minimum 1 inch thick by 4 inch wide, 8 pcf, mineral wool batt insulation faced on one side with aluminum foil scrim (vapor retarder) exposed to the room's interior. Center framing covers over each vertical framing member and secured to the member with impaling pins (Item 2D) spaced nominally 12 inches. Do not pass framing covers through the perimeter joint treatment. Butt framing covers to the top and bottom surfaces of the perimeter joint treatment.

Division 07-Thermal and Moisture Protection
07 84 00 Firestopping
07 84 43 Fire-Resistance Joint sealants

3. **PERIMETER JOINT PROTECTION** – Maximum 8 inch nominal joint width (joint width at installation) of perimeter joint (linear opening). Perimeter joint protection incorporates the following construction features:

   A. Packing Material – Use only materials bearing an Intertek Certified Product Label and meeting the following minimum requirements. Use a minimum 4 inch thick, 4 pcf density, mineral wool batt insulation installed to fill all openings with the fibers running parallel to the concrete slab (Item 1A) edge and curtain wall assembly (Item 2). Compress packing material 33.34% in the nominal joint width. Install top of packing material flush with the top surface of the concrete slab (Item 1A). Tightly compress together splices (butt joints) in the lengths of packing material.

   B. CERTIFIED MANUFACTURER:
   Grabber Construction Products
   CERTIFIED PRODUCT: Sealant
   MODEL: Grabbergard EFS
   Fill, Void or Cavity Material – Apply sealant, (sprayed, brushed, or painted), to cover the top exposed surface of the packing material (Item 3A) compressed in the perimeter joint. Apply a minimum dry film thickness of 1/16 inch and overlap sealant a minimum 1 inch onto the adjacent curtain wall assembly (Item 2) and floor assembly (Item 1). After stopping the application process, and when the applied liquid cures to an elastomeric film before process is restarted, then overlap the edge of the cured sealant at least 1/8 inch with the new sealant being applied.

   C. Support Clips: (Not Shown – Optional) Recommend use of support clips for when vertical movement required. Standard Z-shaped clips consist of 20 GA galvanized steel with the following dimensions: 1 inch wide by 3 inch high with a 2 inch upper leg and 3 inch lower leg.

   D. Support Angle: Horizontally install a minimum 24 GA 1.5 inch x 1.5 inch steel angle mechanically fastened to the interior of the steel panels (Item 2C) and steel-stud framing (Item 2B) at the mid point location of the packing material (Item 3A).

Division 07-Thermal and Moisture Protection
07 84 00 Firestopping
07 84 43 Fire-Resistance Joint sealants

JWA/JS 120-05
CEJ 604 P
PERIMETER JOINT PROTECTION

CERTIFIED PRODUCT: Grabbergard EFS
ASTM E 2307-04
T-Rating – 1 hr.
F-Rating – 2 hr.
ASTM E 1966-01
CYCLING TYPE IV: ± 15% Horizontal Movement @ 50% Compression (Reference Item 3A)

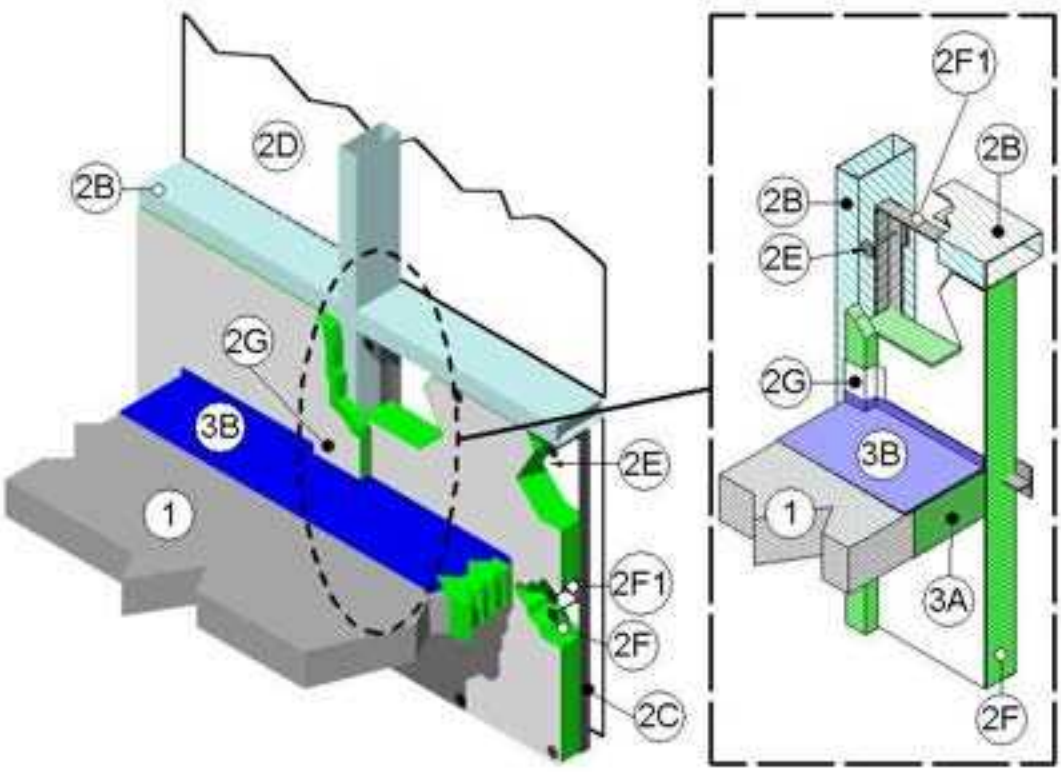

1. **FLOOR ASSEMBLY** – The floor assembly consists of the following construction features:
   - **A.** Two-hour rated reinforced concrete slab using either nominal density 100 pcf lightweight or nominal density 150 pcf normal weight concrete with a minimum thickness of 4-1/2-inches.
   - **B.** When required to accommodate the installation of an architectural joint system, increase overall concrete slab (Item 1A) thickness. Maintain minimum 4-1/2-inch thickness below blockout (longitudinal recesses) formed in the concrete slab (Item 1A) to accommodate the architectural joint system. Vary blockout width without restriction.
2. **CURTAIN WALL ASSEMBLY:** The curtain wall assembly incorporates the following construction features:
   - **A. Mounting Attachment:** (Not Shown) Attach curtain wall framing to the structural framing according to the curtain wall manufacturer's instructions. When required, connect the mounting attachments to the floor slab to the joint face of the floor slab, according to the curtain wall manufacturer's instructions. Maximum 10-foot distance between mounting attachments.

B. **Aluminum Framing:** Erect vertical and horizontal framing mullions and transoms using extruded rectangular aluminum tubing with minimum 0.100 inch thick walls, a min. 5-1/4 inch height and a minimum of 2-1/2 inch width of the extrusion. Larger rectangular aluminum tubing mullions and transoms, sized according to the curtain wall system manufacturer's guidelines are acceptable. Space mullions a minimum 60 inches on center. and transoms a minimum 72 inches on center. Locate transoms at a height of 33 inches above the top surface of the concrete floor assembly (as measured from the bottom of the transom).

C. **Glass Spandrel Panels:** Install glass spandrel panels according to curtain wall framing and the curtain wall system manufacturer's guidelines. Use a minimum 1/4 inch thick, tempered glass with a maximum width of 59 inches and height of 71 inches. Secure glass spandrel panels with a thermal break (thermoset rubber extrusion), pressure bar (aluminum extrusion), 1/4-20 x 5/8 in. long screws, and a snap face (aluminum extrusion). Insulate the glass spandrel panels shall be insulated according to Item 2F.

D. **Glass Vision Panels:** Position glass vision panels at least 35-1/2 inches above the top surface of the floor assembly. Install according to curtain wall framing and the curtain wall system manufacturer's guidelines. Use a minimum 1/4 inch thick, clear tempered glass with a maximum width of 59 inches and height of 71 inches. Secure glass spandrel panels with a thermal break (thermoset rubber extrusion), pressure bar (aluminum extrusion), 1/4-20 x 5/8 in. long screws, and a snap face (aluminum extrusion). Insulate the glass spandrel panels shall be insulated according to Item 2F.

E. **Impaling Pins:** When pins are used instead of screws to secure curtain wall insulation (Item 2F), position them in the same manner as the screws in Item 2F, sized and installed according to the curtain wall system manufacturer's guidelines, or be a min. 4-1/2 inch long, 12 GA steel pin attached to a nominal 2 by 2 inch galvanized sheet steel plate, a nominal 2 by 2 by 2 inch long angle, or directly attached to the framing using a stud gun. Space pins a maximum of 12 inches on center and install around the curtain wall insulation (Item 2F) periphery so that the interior face of the curtain wall insulation is flush with the interior face of the framing.

F. **Curtain Wall Insulation:** Use only materials bearing an Intertek Certified Product Label and meeting the following minimum requirements. Insulate all spandrel panels using a minimum 2 inch thick, 8 pcf, mineral wool batt insulation faced on one side with aluminum foil scrim (vapor retarder), which is exposed to the room interior.

1. Fit curtain wall insulation tightly between vertical framing members, secured with screws placed a maximum 8 inches on center attached to a minimum 16 GA angle around the entire perimeter of each piece of curtain wall insulation (batt). Attach the vertical 16 GA angles to the mullions with screws. At the horizontal butt joints of the curtain wall insulation in the field of the glass spandrel panels (Item 2C), place the horizontal angles back-to-back to form a "T", which is located at the horizontal centerline of the perimeter joint protection (Item 3). Locate all other horizontal seams in the curtain wall insulation at least 6 inches from the top surface of the perimeter joint protection (Item 3). Position the interior face of the curtain wall insulation (batts) flush with the interior face of the aluminum framing (Item 2B). Create a minimum 2-inch air space between the glass spandrel panels and the curtain wall insulation. Install the 36-inch wide curtain wall insulation (batts) without vertical seams, spanning the full distance between the vertical and horizontal aluminum framing, which create the spandrel panel area.

G. **Framing Covers:** Install perimeter joint protection (Item 3) before this material. Use only materials bearing an Intertek Certified Product Label and meeting the following minimum requirements. Do not deform the perimeter joint protection (Item 3) during or after installation of framing covers. Use Strips minimum 1 inch thick by 4 inch wide, 8 pcf, mineral wool batt insulation faced on one side with aluminum foil scrim (vapor retarder) exposed to the room's interior. Center framing covers over each and secured to the member with impaling pins (Item 2D) spaced nominally 12 inches. Do not pass framing covers through the perimeter joint protection. Butt framing covers to the top and bottom surfaces of the perimeter joint protection. Seal the sides of the framing covers with minimum 3-inch wide aluminum foil tape.

"If it's worth building, it's worth GRABBER®." www.grabberman.com

Division 07-Thermal and Moisture Protection
07 84 00 Firestopping
07 84 43 Fire-Resistance Joint sealants

3. **PERIMETER JOINT PROTECTION** – Maximum 8 inch nominal joint width (joint width at installation) of perimeter joint (linear opening). Perimeter joint protection incorporates the following construction features:

   A. Packing Material – Use only materials bearing an Intertek Certified Product Label and meeting the following minimum requirements. Use a minimum 4 inch thick, 4 pcf density, mineral wool batt insulation installed to fill all openings with the fibers running parallel to the concrete slab (Item 1A) edge and curtain wall assembly (Item 2). Compress packing material 50% in the nominal joint width. Install top of packing material flush with the top surface of the concrete slab (Item 1A). Tightly compress together splices (butt joints) in the lengths of packing material.

   B. CERTIFIED MANUFACTURER:
   Grabber Construction Products
   CERTIFIED PRODUCT: Sealant
   MODEL: Grabbergard EFS
   Fill, Void or Cavity Material – Apply sealant, (sprayed, brushed, or painted), to cover the top exposed surface of the packing material (Item 3A) compressed in the perimeter joint. Apply a minimum dry film thickness of 1/16 inch and overlap sealant a minimum 1 inch onto the adjacent curtain wall assembly (Item 2) and floor assembly (Item 1). After stopping the application process, and when the applied liquid cures to an elastomeric film before process is restarted, then overlap the edge of the cured sealant at least 1/8 inch with the new sealant being applied.

   C. Support Clips: (Not Shown – Optional) Recommend use of support clips for when vertical movement required. Standard Z-shaped clips consist of 20 GA galvanized steel with the following dimensions: 1 inch wide by 3 inch high with a 2 inch upper leg and 3 inch lower leg.

Division 07-Thermal and Moisture Protection
07 84 00 Firestopping
07 84 43 Fire-Resistance Joint sealants

JWA/JS 120-06
CEJ 605 P
PERIMETER JOINT PROTECTION

CERTIFIED PRODUCT: Grabbergard EFS
ASTM E 2307-04
T-Rating – 1/4 hr.
F-Rating – 2 hr.
ASTM E 1966-01
CYCLING TYPE IV: ± 15% Horizontal Movement @ 50% Compression (Reference Item 3A)

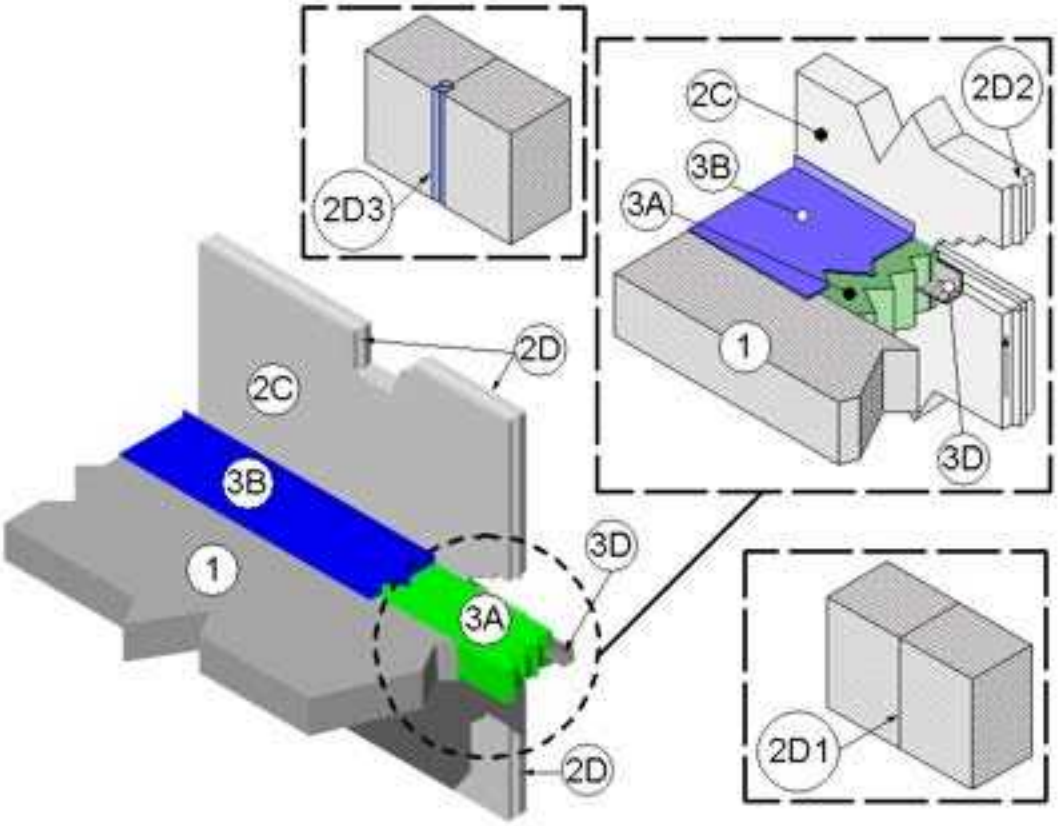

1. **FLOOR ASSEMBLY** – The floor assembly consists of the following construction features:

   A. Two-hour rated reinforced concrete slab using either nominal density 100 pcf lightweight or nominal density 150 pcf normal weight concrete with a minimum thickness of 4-1/2-inches.

   B. When required to accommodate the installation of an architectural joint system, increase overall concrete slab (Item 1A) thickness. Maintain minimum 4-1/2-inch thickness below blockout (longitudinal recesses) formed in the concrete slab (Item 1A) to accommodate the architectural joint system. Vary blockout width without restriction.

Division 07-Thermal and Moisture Protection
07 84 00 Firestopping
07 84 43 Fire-Resistance Joint sealants

2. **CURTAIN WALL ASSEMBLY:** The curtain wall assembly incorporates the following construction features:

   A. **Mounting Attachment:** (Not Shown) Attach curtain wall framing to the structural framing according to the curtain wall manufacturer's instructions. When required, connect the mounting attachments to the floor slab to the joint face of the floor slab, according to the curtain wall manufacturer's instructions. Maximum 10-foot distance between mounting attachments.

   B. **Structural Framing:** (Not shown) Provide structural framing members according to the curtain wall system manufacturer's requirements. Aluminum structural framing must be completely covered by concrete panels.

   C. **Tilt-up Panels:** Tilt-up concrete wall panels, minimum 2-1/2 inches thick, reinforced lightweight or normal weight (100 – 150 pcf). Install tilt-up panels to structural framing (Item 2B) according to the curtain wall system manufacturer's requirements.

   D. **Tilt-up Panel Joints:** Use either flush type (butt joint) (Item 2D1) or key way type (tongue and groove) (Item 2D2) for vertical and horizontal tilt-up panel joints. All tilt-up panel edges at butt joints in contact with each other. When required, seal the surface of the tilt-up panel joints with gaskets or sealant (Item 2D3).

   E. **Impaling Pins:** (Not Shown – Optional) When pins are used position, size and install them according to the curtain wall system manufacturer's guidelines.

   F. **Curtain Wall Insulation:** (Not Shown – Optional) Install perimeter joint protection (Item 3) before this material. Use only materials bearing an Intertek Certified Product Label and meeting the following minimum requirements. Do not deform the perimeter joint protection (Item 3) during or after installation of curtain wall insulation. Use either mineral wool or fiberglass insulation batts.

3. **PERIMETER JOINT PROTECTION** – Maximum 8 inch nominal joint width (joint width at installation) of perimeter joint (linear opening). Perimeter joint protection incorporates the following construction features:

   A. **Packing Material** – Use only materials bearing an Intertek Certified Product Label and meeting the following minimum requirements. Use a minimum 4 inch thick, 4 pcf density, mineral wool batt insulation installed to fill all openings with the fibers running parallel to the concrete slab (Item 1A) edge and curtain wall assembly (Item 2). Compress packing material 50% in the nominal joint width. Install top of packing material flush with the top surface of the concrete slab (Item 1A). Tightly compress together splices (butt joints) in the lengths of packing material.

   B. **CERTIFIED MANUFACTURER:**
   Grabber Construction Products
   CERTIFIED PRODUCT: Sealant
   MODEL: Grabbergard EFS
   Fill, Void or Cavity Material – Apply sealant, (sprayed, brushed, or painted), to cover the top exposed surface of the packing material (Item 3A) compressed in the perimeter joint. Apply a minimum dry film thickness of 1/16 inch and overlap sealant a minimum 1 inch onto the adjacent curtain wall assembly (Item 2) and floor assembly (Item 1). After stopping the application process, and when the applied liquid cures to an elastomeric film before process is restarted, then overlap the edge of the cured sealant at least 1/8 inch with the new sealant being applied.

   C. **Support Clips:** (Not Shown – Optional) Required when using 24 GA Support Angle (Item 3D), use standard Z-shaped clips consist of 20 GA galvanized steel with the following dimensions: 1 inch wide by 3 inch high with a 2 inch upper leg and 3 inch lower leg.

   D. **Support Angle:** Horizontally install a minimum 24 GA 1.5 inch x 1.5 inch steel angle mechanically fastened to the interior of the tilt-up panels (Item 2C) at the mid point location of the packing material (Item 3A). When 16 GA support angles are used Z-clips (Item 3C) are not required.

Division 07-Thermal and Moisture Protection
07 84 00 Firestopping
07 84 43 Fire-Resistance Joint sealants

JWA/JS 120-07
CEJ 606 P
PERIMETER JOINT PROTECTION

CERTIFIED PRODUCT: Grabbergard EFS
ASTM E 2307-04
T-Rating – 1/4 hr.
F-Rating – 2 hr.
ASTM E 1966-01
CYCLING TYPE IV: ± 15% Horizontal Movement @ 50% Compression (Reference Item 3A)

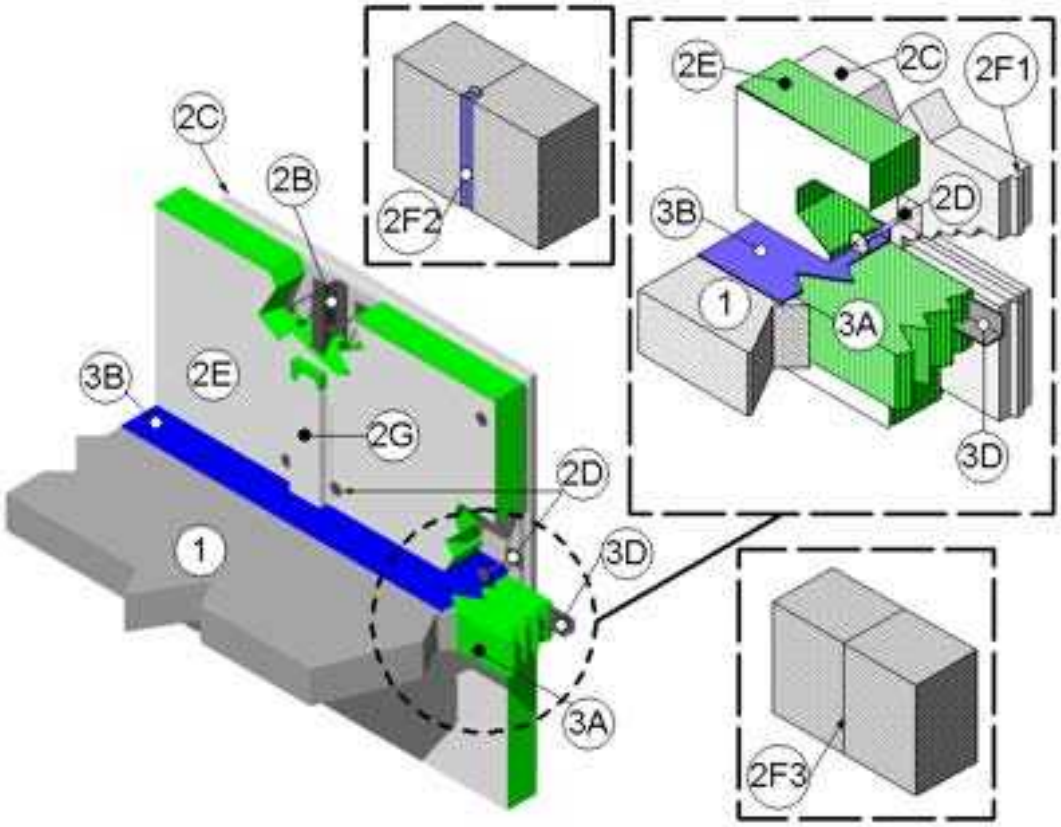

1. **FLOOR ASSEMBLY** – The floor assembly consists of the following construction features:

   A. Two-hour rated reinforced concrete slab using either nominal density 100 pcf lightweight or nominal density 150 pcf normal weight concrete with a minimum thickness of 4-1/2-inches.

   B. When required to accommodate the installation of an architectural joint system, increase overall concrete slab (Item 1A) thickness. Maintain minimum 4-1/2-inch thickness below blockout (longitudinal recesses) formed in the concrete slab (Item 1A) to accommodate the architectural joint system. Vary blockout width without restriction.

Division 07-Thermal and Moisture Protection
07 84 00 Firestopping
07 84 43 Fire-Resistance Joint sealants

2. **CURTAIN WALL ASSEMBLY:** The curtain wall assembly incorporates the following construction features:

   A. Mounting Attachment: (Not Shown) Attach curtain wall framing to the structural framing according to the curtain wall manufacturer's instructions. When required, connect the mounting attachments to the floor slab to the joint face of the floor slab, according to the curtain wall manufacturer's instructions. Maximum 10-foot distance between mounting attachments.

   B. Steel-Stud Framing: Erect vertical framing members using a minimum 3-5/8 inch by 1-1/4 inch, 18 GA steel "C" studs. Erect vertical framing, and when required install horizontal framing members, according to the curtain wall system manufacturer's guidelines. Maximum 60 inch on center vertical framing spacing.

   C. Concrete Panels: Concrete wall panels, minimum 2-1/2 inches thick, 12 inches wide and 12 inches high, reinforced lightweight or normal weight (100 – 150 pcf). Install panels to structural framing (Item 2B) according to the curtain wall system manufacturer's requirements.

   D. Impaling Pins: (Optional) When pins are used position, size and install them according to the curtain wall system manufacturer's guidelines.

   E. Curtain Wall Insulation: (Optional) Install perimeter joint protection (Item 3) before this material. Use only materials bearing an Intertek Certified Product Label and meeting the following minimum requirements. Do not deform the perimeter joint protection (Item 3) during or after installation of curtain wall insulation. Use either mineral wool or fiberglass insulation batts.

   F. Concrete Panel Joints: Use either flush type (butt joint) (Item 2F3) or key way type (tongue and groove) (Item 2F1) for vertical and horizontal tilt-up panel joints. All tilt-up panel edges at butt joints in contact with each other. When required, seal the surface of the tilt-up panel joints with gaskets or sealant (Item 2F2).

   G. Framing Covers: (Optional) Install perimeter joint protection (Item 3) before this material. Use only materials bearing an Intertek Certified Product Label and meeting the following minimum requirements. Do not deform the perimeter joint protection (Item 3) during or after installation of framing covers. Use Strips minimum 1 inch thick by 4 inch wide, 8 pcf, mineral wool batt insulation faced on one side with aluminum foil scrim (vapor retarder) exposed to the room's interior. Center framing covers over each vertical framing member and secured to the member with impaling pins (Item 2D) spaced nominally 12 inches. Do not pass framing covers through the perimeter joint protection. Butt framing covers to the top and bottom surfaces of the perimeter joint protection. Seal the sides of the framing covers with minimum 3-inch wide aluminum foil tape.

3. **PERIMETER JOINT PROTECTION** – Maximum 8 inch nominal joint width (joint width at installation) of perimeter joint (linear opening). Perimeter joint protection incorporates the following construction features:

   A. Packing Material – Use only materials bearing an Intertek Certified Product Label and meeting the following minimum requirements. Use a minimum 4 inch thick, 4 pcf density, mineral wool batt insulation installed to fill all openings with the fibers running parallel to the concrete slab (Item 1A) edge and curtain wall assembly (Item 2). Compress packing material 50% in the nominal joint width. Install top of packing material flush with the top surface of the concrete slab (Item 1A). Tightly compress together splices (butt joints) in the lengths of packing material.

Division 07-Thermal and Moisture Protection
07 84 00 Firestopping
07 84 43 Fire-Resistance Joint sealants

B. CERTIFIED MANUFACTURER:
Grabber Construction Products
CERTIFIED PRODUCT: Sealant
MODEL: Grabbergard EFS

Fill, Void or Cavity Material – Apply sealant, (sprayed, brushed, or painted), to cover the top exposed surface of the packing material (Item 3A) compressed in the perimeter joint. Apply a minimum dry film thickness of 1/16 inch and overlap sealant a minimum 1 inch onto the adjacent curtain wall assembly (Item 2) and floor assembly (Item 1). After stopping the application process, and when the applied liquid cures to an elastomeric film before process is restarted, then overlap the edge of the cured sealant at least 1/8 inch with the new sealant being applied.

C. **Support Clips:** (Not Shown – Optional) Required when using 24 GA Support Angle (Item 3D), use standard Z-shaped clips consist of 20 GA galvanized steel with the following dimensions: 1 inch wide by 3 inch high with a 2 inch upper leg and 3 inch lower leg.

D. **Support Angle:** Horizontally install a minimum 24 GA 1.5 inch x 1.5 inch steel angle mechanically fastened to the interior of the tilt-up panels (Item 2C) at the mid point location of the packing material (Item 3A). When 16 GA support angles are used Z-clips (Item 3C) are not required.

Division 07-Thermal and Moisture Protection
07 84 00 Firestopping
07 84 43 Fire-Resistance Joint sealants

JWA/JS 120-08
CEJ 607 P
PERIMETER JOINT PROTECTION

CERTIFIED PRODUCT: Grabbergard EFS
ASTM E 2307-04
T-Rating – 1/4 hr.
F-Rating – 2 hr.
ASTM E 1966-01
CYCLING TYPE IV: ± 15% Horizontal Movement @ 50% Compression (Reference Item 3A)

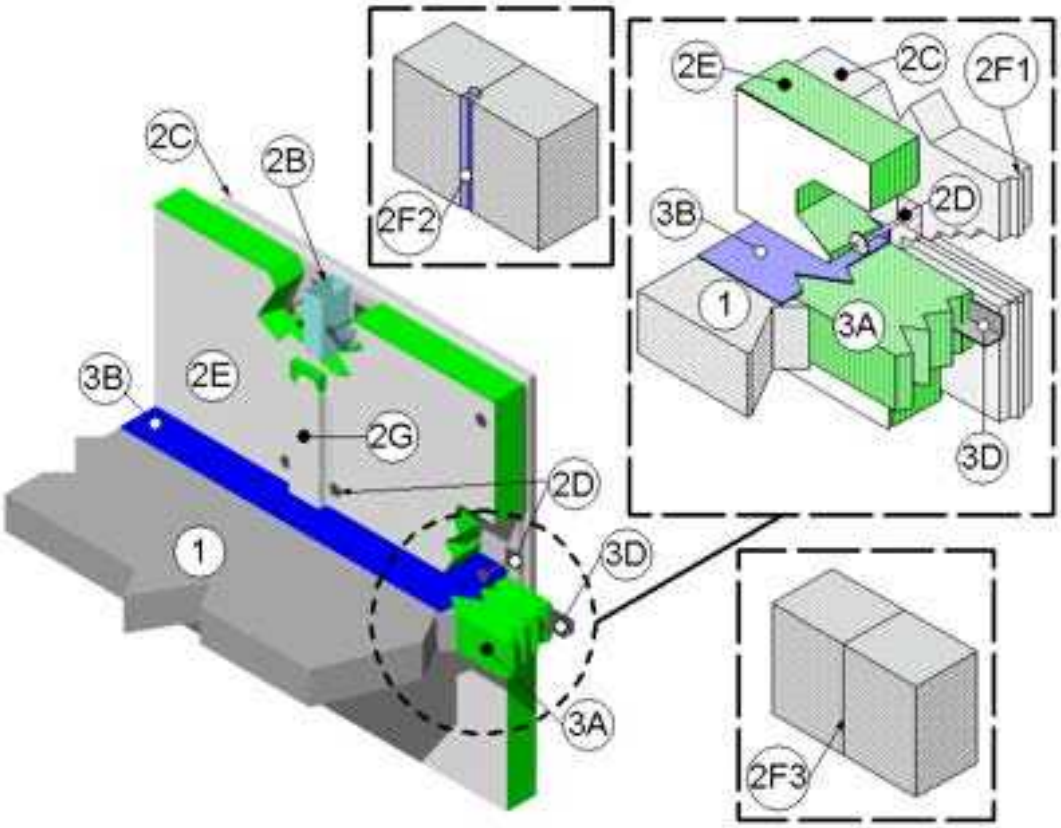

1. **FLOOR ASSEMBLY** – The floor assembly consists of the following construction features:

   A. Two-hour rated reinforced concrete slab using either nominal density 100 pcf lightweight or nominal density 150 pcf normal weight concrete with a minimum thickness of 4-1/2-inches.

   B. When required to accommodate the installation of an architectural joint system, increase overall concrete slab (Item 1A) thickness. Maintain minimum 4-1/2-inch thickness below blockout (longitudinal recesses) formed in the concrete slab (Item 1A) to accommodate the architectural joint system. Vary blockout width without restriction.

Division 07-Thermal and Moisture Protection
07 84 00 Firestopping
07 84 43 Fire-Resistance Joint sealants

2. **CURTAIN WALL ASSEMBLY:** The curtain wall assembly incorporates the following construction features:

A. Mounting Attachment: (Not Shown) Attach curtain wall framing to the structural framing according to the curtain wall manufacturer's instructions. When required, connect the mounting attachments to the floor slab to the joint face of the floor slab, according to the curtain wall manufacturer's instructions. Maximum 10-foot distance between mounting attachments.

B. Aluminum Framing: Erect vertical and horizontal mullions and transoms using extruded rectangular aluminum tubing with minimum 0.100 inch thick walls, a minimum 4 inches height and a minimum of 2-1/2 inch width of the extrusion. Larger rectangular aluminum tubing mullions and transoms, sized and attached according to the curtain wall system manufacturer's guidelines are acceptable. Space mullions a minimum 60 inches on center and completely cover mullions by the concrete panels (Item 2C). When required, install horizontal framing members according to the curtain wall system manufacturer's guidelines and completely cover transoms by the concrete panels (Item 2C).

C. Concrete Panels: Concrete wall panels, minimum 2-1/2 inches thick, 12 inches wide and 12 inches high, reinforced lightweight or normal weight (100 – 150 pcf). Install panels to structural framing (Item 2B) according to the curtain wall system manufacturer's requirements.

D. Impaling Pins: When pins are used position, size and install them according to the curtain wall system manufacturer's guidelines.

E. Curtain Wall Insulation: Install perimeter joint protection (Item 3) before this material. Use only materials bearing an Intertek Certified Product Label and meeting the following minimum requirements. Do not deform the perimeter joint treatment (Item 3) during or after installation of curtain wall insulation. Use a nominal 4 inch thick 4 pcf or nominal 2 inch thick 8 pcf mineral wool batt insulation faced on one side with aluminum foil scrim (vapor retarder) exposed to the room's interior. Locate a support angle (Item 3D) at the horizontal centerline of the perimeter joint protection (Item 3), which is installed between the concrete floor assembly (Item 1) and the concrete panels (Item 2C). Butt the curtain wall insulation to each side of the support angle (Item 3D). Set all other horizontal seams in the curtain wall insulation a minimum 6 inches from the top surface of the perimeter joint protection. Fit batts tightly between aluminum framing (Item 2B) and secure with screws placed a maximum 8 inches on center. Install the curtain wall insulation (batts) flush with the interior face of the aluminum framing (Item 2B). Install the minimum 24-inch wide curtain wall insulation (batts) without vertical seams. Fill the spandrel panel area completely. Seal all meeting edges of curtain wall insulation (batts) with nominal 4-inch wide pressure sensitive aluminum foil faced tape centered over the junction so that approx. 2 inches of tape covers each edge of the adjacent curtain wall insulation (batt).

F. Concrete Panel Joints: Use either flush type (butt joint) (Item 2F3) or key way type (tongue and groove) (Item 2F1) for vertical and horizontal tilt-up panel joints. All tilt-up panel edges at butt joints in contact with each other. When required, seal the surface of the tilt-up panel joints with gaskets or sealant (Item 2F2).

G. **Framing Covers**: Install perimeter joint protection (Item 3) before this material. Use only materials bearing an Intertek Certified Product Label and meeting the following minimum requirements. Do not deform the perimeter joint treatment (Item 3) during or after installation of framing covers. Use Strips minimum 1 inch thick by 4 inch wide, 8 pcf, mineral wool batt insulation faced on one side with aluminum foil scrim (vapor retarder) exposed to the room's interior. Center framing covers over each vertical framing member and secured to the member with impaling pins (Item 2D) spaced nominally 12 inches. Do not pass framing covers through the perimeter joint treatment. Butt framing covers to the top and bottom surfaces of the perimeter joint treatment. Seal the sides of the framing covers with minimum 3-inch wide aluminum foil tape.

3. **PERIMETER JOINT PROTECTION** – Maximum 8 inch nominal joint width (joint width at installation) of perimeter joint (linear opening). Perimeter joint protection incorporates the following construction features:

A. Packing Material – Use only materials bearing an Intertek Certified Product Label and meeting the following minimum requirements. Use a minimum 4 inch thick, 4 pcf density, mineral wool batt insulation installed to fill all openings with the fibers running parallel to the concrete slab (Item 1A) edge and curtain wall assembly (Item 2). Compress packing material 50% in the nominal joint width. Install top of packing material flush with the top surface of the concrete slab (Item 1A). Tightly compress together splices (butt joints) in the lengths of packing material.

B. **CERTIFIED MANUFACTURER:**
Grabber Construction Products
CERTIFIED PRODUCT: Sealant
MODEL: Grabbergard EFS

Fill, Void or Cavity Material – Apply sealant, (sprayed, brushed, or painted), to cover the top exposed surface of the packing material (Item 3A) compressed in the perimeter joint. Apply a minimum dry film thickness of 1/16 inch and overlap sealant a minimum 1 inch onto the adjacent curtain wall assembly (Item 2) and floor assembly (Item 1). After stopping the application process, and when the applied liquid cures to an elastomeric film before process is restarted, then overlap the edge of the cured sealant at least 1/8 inch with the new sealant being applied.

C. **Support Clips:** (Not Shown – Optional) Required when using 24 GA Support Angle (Item 3D), use standard Z-shaped clips consist of 20 GA galvanized steel with the following dimensions: 1 inch wide by 3 inch high with a 2 inch upper leg and 3 inch lower leg.

D. **Support Angle:** Horizontally install a minimum 24 GA 1.5 inch x 1.5 inch steel angle mechanically fastened to the interior of the tilt-up panels (Item 2C) at the mid point location of the packing material (Item 3A). When 16 GA support angles are used Z-clips (Item 3C) are not required.

"If it's worth building, it's worth GRABBER®" www.grabberman.com

Division 07-Thermal and Moisture Protection
07 84 00 Firestopping
07 84 43 Fire-Resistance Joint sealants

JWA/JS 120-09
CEJ 608 P
PERIMETER JOINT PROTECTION

CERTIFIED PRODUCT: Grabbergard EFS
ASTM E 2307-04
T-Rating – 3/4 hr.
F-Rating – 2 hr.
ASTM E 1966-01
CYCLING TYPE IV: ± 16.7% Horizontal Movement @ 33.34% Compression (Reference Item 3A)

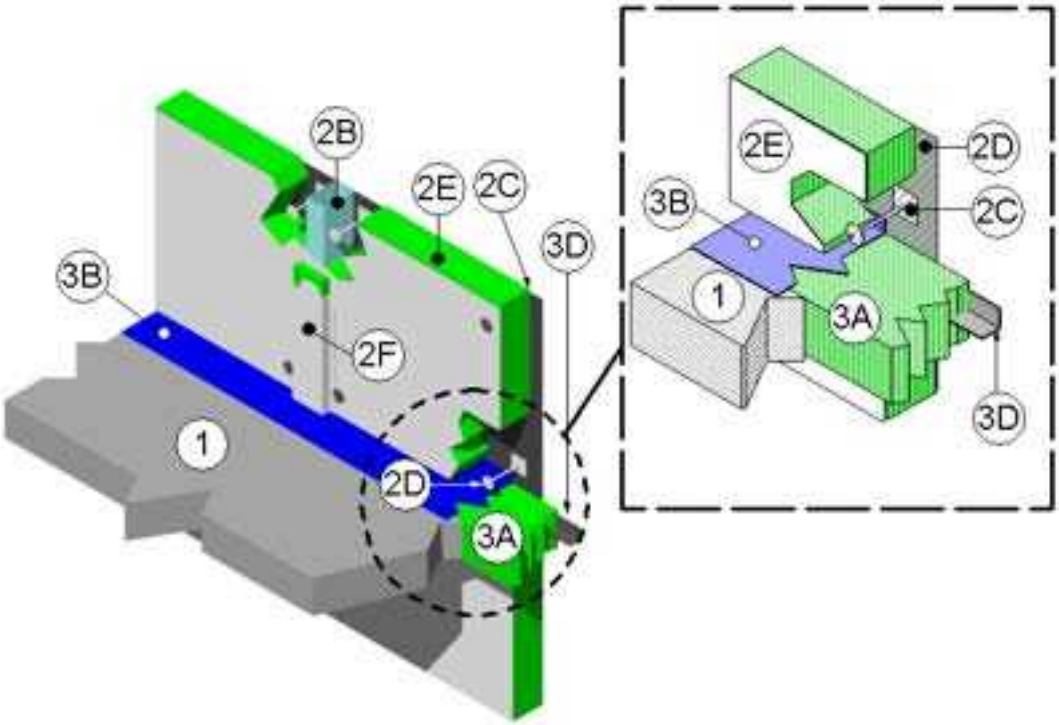

1. **FLOOR ASSEMBLY** – The floor assembly consists of the following construction features:
   A. Two-hour rated reinforced concrete slab using either nominal density 100 pcf lightweight or nominal density 150 pcf normal weight concrete with a minimum thickness of 4-1/2-inches.
   B. When required to accommodate the installation of an architectural joint system, increase overall concrete slab (Item 1A) thickness. Maintain minimum 4-1/2-inch thickness below blockout (longitudinal recesses) formed in the concrete slab (Item 1A) to accommodate the architectural joint system. Vary blockout width without restriction.
2. **CURTAIN WALL ASSEMBLY:** The curtain wall assembly incorporates the following construction features:
   A. Mounting Attachment: (Not Shown) Attach curtain wall framing to the structural framing according to the curtain wall manufacturer's instructions. When required, connect the mounting attachments to the floor slab to the joint face of the floor slab, according to the curtain wall manufacturer's instructions. Maximum 10-foot distance between mounting attachments.

B. **Aluminum Framing:** Erect vertical and horizontal mullions and transoms using extruded rectangular aluminum tubing with minimum 0.100 inch thick walls, a minimum 6-1/2 inches height and a minimum of 2-1/2 inch width of the extrusion. Larger rectangular aluminum tubing mullions and transoms, sized and attached according to the curtain wall system manufacturer's guidelines are acceptable. Space mullions a minimum 60 inches on center and transoms a minimum 72 in. on center. Transoms are to be located at a height of 33 in. above the top surface of the concrete floor assembly (Item 1) as measured from the bottom of the transom.

C. **Steel Panels:** Install steel panels to aluminum framing (Item 2B) according to the curtain wall system manufacturer's guidelines. Use a minimum 20 GA sheet steel panel with maximum dimensions of 60 by 72 inches.

D. **Impaling Pins:** When pins are used position, size and install them according to the curtain wall system manufacturer's guidelines.

E. **Curtain Wall Insulation:** Install perimeter joint protection (Item 3) before this material. Use only materials bearing an Intertek Certified Product Label and meeting the following minimum requirements. Do not deform the perimeter joint treatment (Item 3) during or after installation of curtain wall insulation. Use a nominal 4 inch thick 4 pcf or nominal 2 inch thick 8 pcf mineral wool batt insulation faced on one side with aluminum foil scrim (vapor retarder) exposed to the room's interior. Locate a support angle (Item 3D) at the horizontal centerline of the perimeter joint protection (Item 3), which is installed between the concrete floor assembly (Item 1) and the concrete panels (Item 2C). As the curtain wall insulation does not pass through joint treatment. Set all other horizontal seams in the curtain wall insulation a minimum 6 inches from the top surface of the perimeter joint protection. Fit batts tightly between aluminum framing (Item 2B) and secure with screws placed a maximum 8 inches on center. Install the curtain wall insulation (batts) flush with the interior face of the aluminum framing (Item 2B). Install the minimum 24-inch wide curtain wall insulation (batts) without vertical seams. Fill the spandrel panel area completely. Seal all meeting edges of curtain wall insulation (batts) with nominal 4-inch wide pressure sensitive aluminum foil faced tape centered over the junction so that approx. 2 inches of tape covers each edge of the adjacent curtain wall insulation (batt).

F. **Concrete Panel Joints:** Use either flush type (butt joint) (Item 2F3) or key way type (tongue and groove) (Item 2F1) for vertical and horizontal tilt-up panel joints. All tilt-up panel edges at butt joints in contact with each other. When required, seal the surface of the tilt-up panel joints with gaskets or sealant (Item 2F2).

G. **Framing Covers:** Install perimeter joint protection (Item 3) before this material. Use only materials bearing an Intertek Certified Product Label and meeting the following minimum requirements. Do not deform the perimeter joint treatment (Item 3) during or after installation of framing covers. Use Strips minimum 1 inch thick by 4 inch wide, 8 pcf, mineral wool batt insulation faced on one side with aluminum foil scrim (vapor retarder) exposed to the room's interior. Center framing covers over each vertical framing member and secured to the member with impaling pins (Item 2D) spaced nominally 12 inches. Do not pass framing covers through the perimeter joint treatment. Butt framing covers to the top and bottom surfaces of the perimeter joint treatment. Seal the sides of the framing covers with minimum 3-inch wide aluminum foil tape.

3. **PERIMETER JOINT PROTECTION** – Maximum 8 inch nominal joint width (joint width at installation) of perimeter joint (linear opening). Perimeter joint protection incorporates the following construction features:

A. **Packing Material** – Use only materials bearing an Intertek Certified Product Label and meeting the following minimum requirements. Use a minimum 4 inch thick, 4 pcf density, mineral wool batt insulation installed to fill all openings with the fibers running parallel to the concrete slab (Item 1A) edge and curtain wall assembly (Item 2). Compress packing material 33.34% in the nominal joint width. Install top of packing material flush with the top surface of the concrete slab (Item 1A). Tightly compress together splices (butt joints) in the lengths of packing material.

Division 07-Thermal and Moisture Protection
07 84 00 Firestopping
07 84 43 Fire-Resistance Joint sealants

B. CERTIFIED MANUFACTURER:
Grabber Construction Products
CERTIFIED PRODUCT: Sealant
MODEL: Grabbergard EFS
Fill, Void or Cavity Material – Apply sealant, (sprayed, brushed, or painted), to cover the top exposed surface of the packing material (Item 3A) compressed in the perimeter joint. Apply a minimum dry film thickness of 1/16 inch and overlap sealant a minimum 1 inch onto the adjacent curtain wall assembly (Item 2) and floor assembly (Item 1). After stopping the application process, and when the applied liquid cures to an elastomeric film before process is restarted, then overlap the edge of the cured sealant at least 1/8 inch with the new sealant being applied.

C. **Support Clips:** (Not Shown – Optional) Required when using 24 GA Support Angle (Item 3D), use standard Z-shaped clips consist of 20 GA galvanized steel with the following dimensions: 1 inch wide by 3 inch high with a 2 inch upper leg and 3 inch lower leg.

D. **Support Angle:** Horizontally install a minimum 24 GA 1.5 inch x 1.5 inch steel angle mechanically fastened to the interior of the tilt-up panels (Item 2C) at the mid point location of the packing material (Item 3A). When 16 GA support angles are used Z-clips (Item 3C) are not required.

Division 07-Thermal and Moisture Protection
07 84 00 Firestopping
07 84 43 Fire-Resistance Joint sealants

JWA/JS 120-10
CEJ 609 P
PERIMETER JOINT PROTECTION

CERTIFIED PRODUCT: Grabbergard EFS
ASTM E 2307-04
T-Rating – 3/4 hr.
F-Rating – 2 hr.
ASTM E 1966-01
CYCLING TYPE IV: ± 16.7% Horizontal Movement @ 33.34% Compression (Reference Item 3A)

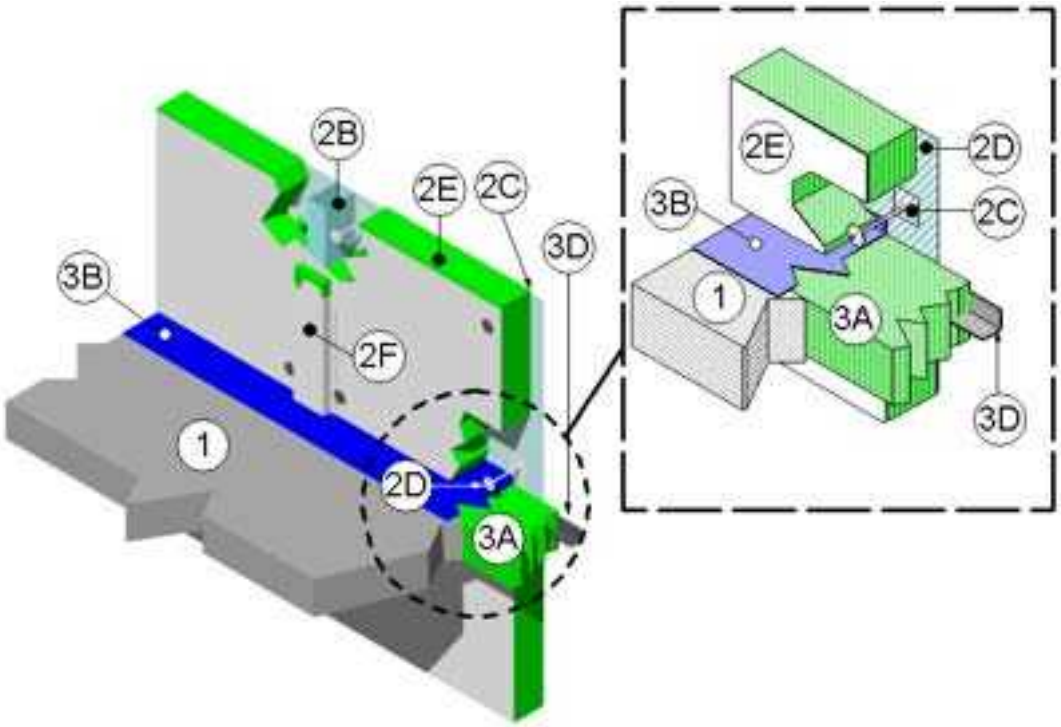

1. **FLOOR ASSEMBLY** – The floor assembly consists of the following construction features:
   - **A.** Two-hour rated reinforced concrete slab using either nominal density 100 pcf lightweight or nominal density 150 pcf normal weight concrete with a minimum thickness of 4-1/2-inches.
   - **B.** When required to accommodate the installation of an architectural joint system, increase overall concrete slab (Item 1A) thickness. Maintain minimum 4-1/2-inch thickness below blockout (longitudinal recesses) formed in the concrete slab (Item 1A) to accommodate the architectural joint system. Vary blockout width without restriction.
2. **CURTAIN WALL ASSEMBLY:** The curtain wall assembly incorporates the following construction features:
   - **A.** Mounting Attachment: (Not Shown) Attach curtain wall framing to the structural framing according to the curtain wall manufacturer's instructions. When required, connect the mounting attachments to the floor slab to the joint face of the floor slab, according to the curtain wall manufacturer's instructions. Maximum 10-foot distance between mounting attachments.

B. **Aluminum Framing:** Erect vertical and horizontal mullions and transoms using extruded rectangular aluminum tubing with minimum 0.100 inch thick walls, a minimum 6-1/2 inches height and a minimum of 2-1/2 inch width of the extrusion. Larger rectangular aluminum tubing mullions and transoms, sized and attached according to the curtain wall system manufacturer's guidelines are acceptable. Space mullions a minimum 60 inches on center and transoms a minimum 72 in. on center. Transoms are to be located at a height of 33 in. above the top surface of the concrete floor assembly (Item 1) as measured from the bottom of the transom.

C. **Aluminum Panels:** Install aluminum panels to aluminum framing (Item 2B) according to the curtain wall system manufacturer's guidelines. Use a minimum 1/8-inch thick aluminum sheet panel with maximum dimensions of 60 by 72 inches.

D. **Impaling Pins:** When pins are used position, size and install them according to the curtain wall system manufacturer's guidelines.

E. **Curtain Wall Insulation:** Install perimeter joint protection (Item 3) before this material. Use only materials bearing an Intertek Certified Product Label and meeting the following minimum requirements. Do not deform the perimeter joint treatment (Item 3) during or after installation of curtain wall insulation. Use a nominal 4 inch thick 4 pcf or nominal 2 inch thick 8 pcf mineral wool batt insulation faced on one side with aluminum foil scrim (vapor retarder) exposed to the room's interior. Locate a support angle (Item 3D) at the horizontal centerline of the perimeter joint protection (Item 3), which is installed between the concrete floor assembly (Item 1) and the aluminum panels (Item 2C). As the curtain wall insulation does not pass through joint treatment. Set all other horizontal seams in the curtain wall insulation a minimum 6 inches from the top surface of the perimeter joint protection. Fit batts tightly between aluminum framing (Item 2B) and secure with screws placed a maximum 8 inches on center. Install the curtain wall insulation (batts) flush with the interior face of the aluminum framing (Item 2B). Install the minimum 24-inch wide curtain wall insulation (batts) without vertical seams. Fill the spandrel panel area completely. Seal all meeting edges of curtain wall insulation (batts) with nominal 4-inch wide pressure sensitive aluminum foil faced tape centered over the junction so that approx. 2 inches of tape covers each edge of the adjacent curtain wall insulation (batt).

F. **Concrete Panel Joints:** Use either flush type (butt joint) (Item 2F3) or key way type (tongue and groove) (Item 2F1) for vertical and horizontal tilt-up panel joints. All tilt-up panel edges at butt joints in contact with each other. When required, seal the surface of the tilt-up panel joints with gaskets or sealant (Item 2F2).

G. **Framing Covers:** Install perimeter joint protection (Item 3) before this material. Use only materials bearing an Intertek Certified Product Label and meeting the following minimum requirements. Do not deform the perimeter joint treatment (Item 3) during or after installation of framing covers. Use Strips minimum 1 inch thick by 4 inch wide, 8 pcf, mineral wool batt insulation faced on one side with aluminum foil scrim (vapor retarder) exposed to the room's interior. Center framing covers over each vertical framing member and secured to the member with impaling pins (Item 2D) spaced nominally 12 inches. Do not pass framing covers through the perimeter joint treatment. Butt framing covers to the top and bottom surfaces of the perimeter joint treatment. Seal the sides of the framing covers with minimum 3-inch wide aluminum foil tape.

1. **PERIMETER JOINT PROTECTION** – Maximum 8 inch nominal joint width (joint width at installation) of perimeter joint (linear opening). Perimeter joint protection incorporates the following construction features:

A. **Packing Material** – Use only materials bearing an Intertek Certified Product Label and meeting the following minimum requirements. Use a minimum 4 inch thick, 4 pcf density, mineral wool batt insulation installed to fill all openings with the fibers running parallel to the concrete slab (Item 1A) edge and curtain wall assembly (Item 2). Compress packing material 33.34% in the nominal joint width. Install top of packing material flush with the top surface of the concrete slab (Item 1A). Tightly compress together splices (butt joints) in the lengths of packing material.

Division 07-Thermal and Moisture Protection
07 84 00 Firestopping
07 84 43 Fire-Resistance Joint sealants

B. **CERTIFIED MANUFACTURER:**
Grabber Construction Products
CERTIFIED PRODUCT: Sealant
MODEL: Grabbergard EFS

Fill, Void or Cavity Material – Apply sealant, (sprayed, brushed, or painted), to cover the top exposed surface of the packing material (Item 3A) compressed in the perimeter joint. Apply a minimum dry film thickness of 1/16 inch and overlap sealant a minimum 1 inch onto the adjacent curtain wall assembly (Item 2) and floor assembly (Item 1). After stopping the application process, and when the applied liquid cures to an elastomeric film before process is restarted, then overlap the edge of the cured sealant at least 1/8 inch with the new sealant being applied.

C. **Support Clips**: (Not Shown – Optional) Required when using 24 GA Support Angle (Item 3D), use standard Z-shaped clips consist of 20 GA galvanized steel with the following dimensions: 1 inch wide by 3 inch high with a 2 inch upper leg and 3 inch lower leg.

D. **Support Angle:** Horizontally install a minimum 24 GA 1.5 inch x 1.5 inch steel angle mechanically fastened to the interior of the tilt-up panels (Item 2C) at the mid point location of the packing material (Item 3A). When 16 GA support angles are used Z-clips (Item 3C) are not required.

Division 07-Thermal and Moisture Protection
07 84 00 Firestopping
07 84 43 Fire-Resistance Joint sealants

JWA/JS 120-11
CEJ 610 P
PERIMETER JOINT PROTECTION

CERTIFIED PRODUCT: Grabbergard EFS
ASTM E 2307-04
T-Rating – 3/4 hr.
F-Rating – 2 hr.
ASTM E 1966-01
CYCLING TYPE IV: ± 16.7% Horizontal Movement @ 50% Compression (Reference Item 3A)

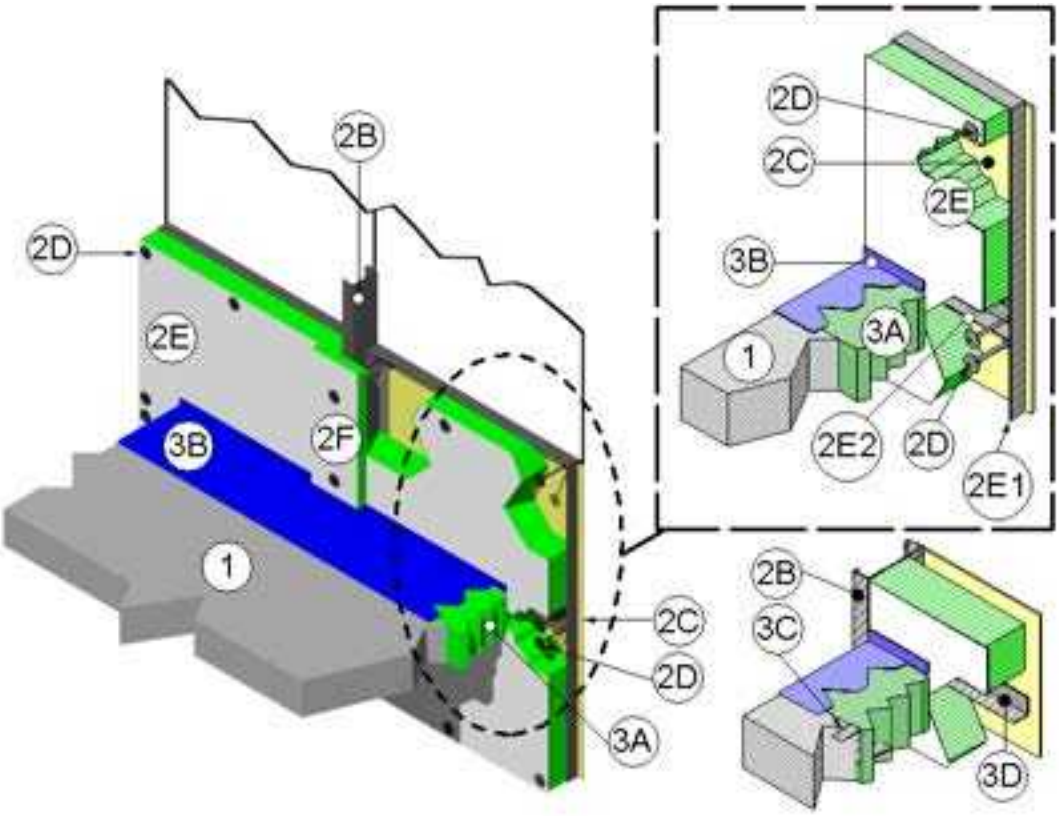

1. **FLOOR ASSEMBLY** – The floor assembly consists of the following construction features:

   A. Two-hour rated reinforced concrete slab using either nominal density 100 pcf lightweight or nominal density 150 pcf normal weight concrete with a minimum thickness of 4-1/2-inches.

   B. When required to accommodate the installation of an architectural joint system, increase overall concrete slab (Item 1A) thickness. Maintain minimum 4-1/2-inch thickness below blockout (longitudinal recesses) formed in the concrete slab (Item 1A) to accommodate the architectural joint system. Vary blockout width without restriction.

1.

"If it's worth building, it's worth GRABBER®" www.grabberman.com

Division 07-Thermal and Moisture Protection
07 84 00 Firestopping
07 84 43 Fire-Resistance Joint sealants

2. **CURTAIN WALL ASSEMBLY:** The curtain wall assembly incorporates the following construction features:

A. Mounting Attachment: (Not Shown) Attach curtain wall framing to the structural framing according to the curtain wall manufacturer's instructions. When required, connect the mounting attachments to the floor slab to the joint face of the floor slab, according to the curtain wall manufacturer's instructions. Maximum 10-foot distance between mounting attachments.

B. Steel-Stud Framing: Erect vertical framing members using a minimum 5-1/2 inch by 1-5/8 inch, 18 GA steel "C" studs. Erect vertical framing, and when required install horizontal framing members, according to the curtain wall system manufacturer's guidelines. Maximum 48 inch on center vertical framing spacing. Maximum 72 inch on center horizontal framing spacing. Locate transoms a minimum height of 33 inches above the top surface of the concrete floor assembly (Item 1) as measured from the bottom of the transom.

C. Glass Panels: Install glass spandrel and vision panels according to curtain wall framing and the curtain wall system manufacturer's guidelines. Use a minimum 1/4 inch thick, clear tempered glass with a maximum width of 59 inches and height of 71 inches. Secure glass spandrel panels with a thermal break (thermoset rubber extrusion), pressure bar (aluminum extrusion), 1/4-20 x 5/8 in. long screws, and a snap face (aluminum extrusion). Insulate the glass spandrel panels shall be insulated according to Item 2F.

D. Impaling Pins: When pins are used instead of screws to secure curtain wall insulation (Item 2F), position them in the same manner as the screws in Item 2F, sized and installed according to the curtain wall system manufacturer's guidelines, or be a min. 4-1/2 inch long, 12 GA steel pin attached to a nominal 2 by 2 inch galvanized sheet steel plate, a nominal 2 by 2 by 2 inch long angle, or directly attached to the framing using a stud gun. Space pins a maximum of 12 inches on center and install around the curtain wall insulation (Item 2F) periphery so that the interior face of the curtain wall insulation is flush with the interior face of the framing.

E. Curtain Wall Insulation: Use only materials bearing an Intertek Certified Product Label and meeting the following minimum requirements. Insulate all spandrel panels using a minimum 4 inch thick, 4 pcf, or 2 inch thick, 8 pcf, mineral wool batt insulation faced on one side with aluminum foil scrim (vapor retarder), which is exposed to the room interior. Fill the spandrel panel area completely. Fill the cavity of all "C"-shaped studs with batt insulation.

i. Fit curtain wall insulation tightly between vertical framing members, secured with screws placed a maximum 8 inches on center attached to a minimum 16 GA angle around the entire perimeter of each piece of curtain wall insulation (batt). Attach the vertical 16 GA angles to the mullions with screws. At the horizontal butt joints of the curtain wall insulation in the field of the glass spandrel panels (Item 2C), place the horizontal angles back-to-back to form a "T", which is located at the horizontal centerline of the perimeter joint protection (Item 3). Locate all other horizontal seams in the curtain wall insulation at least 6 inches from the top surface of the perimeter joint protection (Item 3).

ii. Position the interior face of the curtain wall insulation (batts) flush with the interior face of the aluminum framing (Item 2B). Create a minimum 1 ½ -inch air space between the glass spandrel panels (Item 2C) and the curtain wall insulation. Install the 36-inch wide curtain wall insulation (batts) without vertical seams, spanning the full distance between the vertical and horizontal aluminum framing (Item 2B), which create the spandrel panel area.

Division 07-Thermal and Moisture Protection
07 84 00 Firestopping
07 84 43 Fire-Resistance Joint sealants

A. **Framing Covers:** Install perimeter joint protection (Item 3) before this material. Use only materials bearing an Intertek Certified Product Label and meeting the following minimum requirements. Do not deform the perimeter joint protection (Item 3) during or after installation of framing covers. Use Strips minimum 1 inch thick by 4 inch wide, 8 pcf, mineral wool batt insulation faced on one side with aluminum foil scrim (vapor retarder) exposed to the room's interior. Center framing covers over each vertical framing member and secured to the member with impaling pins (Item 2D) spaced nominally 12 inches. Do not pass framing covers through the perimeter joint protection. Butt framing covers to the top and bottom surfaces of the perimeter joint protection. Seal the sides of the framing covers with minimum 3-inch wide aluminum foil tape.

2. **PERIMETER JOINT PROTECTION** – Maximum 8 inch nominal joint width (joint width at installation) of perimeter joint (linear opening). Perimeter joint protection incorporates the following construction features:

A. **Packing Material** – Use only materials bearing an Intertek Certified Product Label and meeting the following minimum requirements. Use a minimum 4 inch thick, 4 pcf density, mineral wool batt insulation installed to fill all openings with the fibers running parallel to the concrete slab (Item 1A) edge and curtain wall assembly (Item 2). Compress packing material 50% in the nominal joint width. Install top of packing material flush with the top surface of the concrete slab (Item 1A). Tightly compress together splices (butt joints) in the lengths of packing material.

B. **CERTIFIED MANUFACTURER:**
Grabber Construction Products
CERTIFIED PRODUCT: Sealant
MODEL: Grabbergard EFS

Fill, Void or Cavity Material – Apply sealant, (sprayed, brushed, or painted), to cover the top exposed surface of the packing material (Item 3A) compressed in the perimeter joint. Apply a minimum dry film thickness of 1/16 inch and overlap sealant a minimum 1 inch onto the adjacent curtain wall assembly (Item 2) and floor assembly (Item 1). After stopping the application process, and when the applied liquid cures to an elastomeric film before process is restarted, then overlap the edge of the cured sealant at least 1/8 inch with the new sealant being applied.

C. **Support Clips:** (Not Shown – Optional) Recommend use of support clips for when vertical movement required. Standard Z-shaped clips consist of 20 GA galvanized steel with the following dimensions: 1 inch wide by 3 inch high with a 2 inch upper leg and 3 inch lower leg.

D. **Support Angle:** Horizontally install a minimum 24 GA 1.5 inch x 1.5 inch steel angle mechanically fastened to the interior of the tilt-up panels (Item 2C) at the mid point location of the packing material (Item 3A). When 16 GA support angles are used Z-clips (Item 3C) are not required.

Division 07-Thermal and Moisture Protection
07 84 00 Firestopping
07 84 43 Fire-Resistance Joint sealants

JWA/JS 120-12
CEJ 611 P
PERIMETER JOINT PROTECTION

CERTIFIED PRODUCT: Grabbergard EFS
ASTM E 2307-04
T-Rating – 3/4 hr.
F-Rating – 2 hr.
ASTM E 1966-01
CYCLING TYPE IV: ± 16.7% Horizontal Movement @ 33.34% Compression (Reference Item 3A)

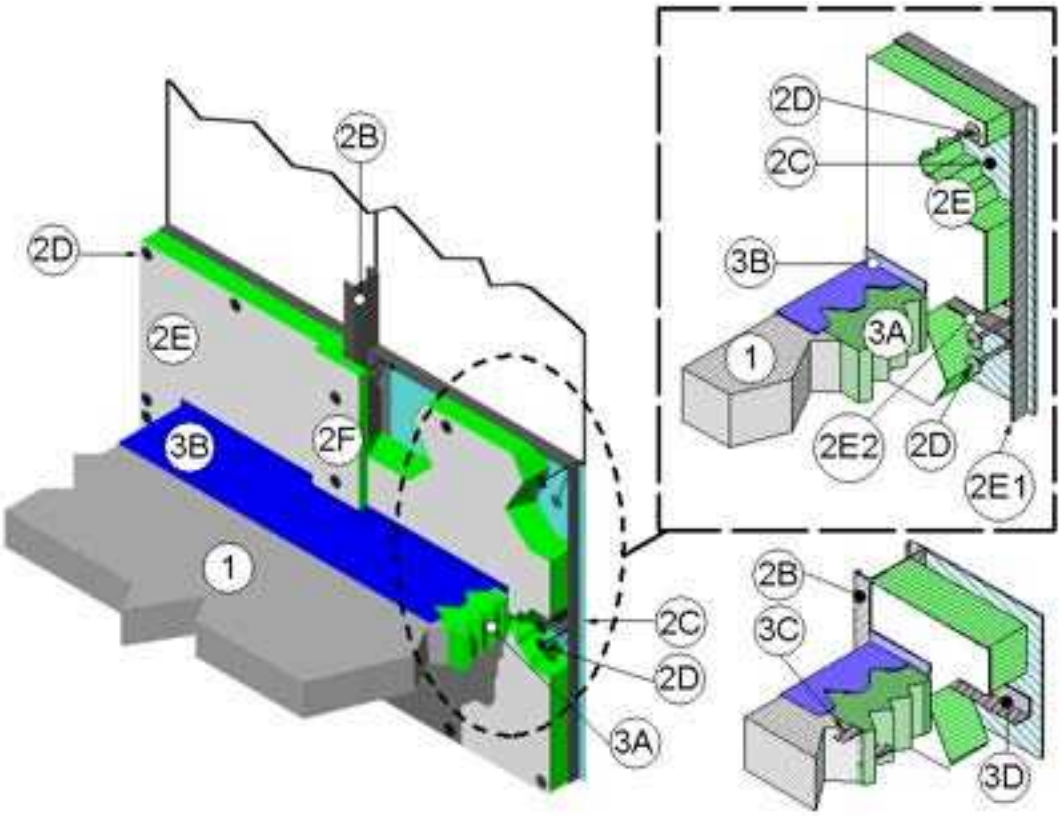

1. **FLOOR ASSEMBLY** – The floor assembly consists of the following construction features:

   A. Two-hour rated reinforced concrete slab using either nominal density 100 pcf lightweight or nominal density 150 pcf normal weight concrete with a minimum thickness of 4-1/2-inches.

   B. When required to accommodate the installation of an architectural joint system, increase overall concrete slab (Item 1A) thickness. Maintain minimum 4-1/2-inch thickness below blockout (longitudinal recesses) formed in the concrete slab (Item 1A) to accommodate the architectural joint system. Vary blockout width without restriction.

Division 07-Thermal and Moisture Protection
07 84 00 Firestopping
07 84 43 Fire-Resistance Joint sealants

2. **CURTAIN WALL ASSEMBLY:** The curtain wall assembly incorporates the following construction features:

B. Mounting Attachment: (Not Shown) Attach curtain wall framing to the structural framing according to the curtain wall manufacturer's instructions. When required, connect the mounting attachments to the floor slab to the joint face of the floor slab, according to the curtain wall manufacturer's instructions. Maximum 10-foot distance between mounting attachments.

C. Steel-Stud Framing: Erect vertical framing members using a minimum 3-5/8 inch by 1-5/8 inch, 18 GA steel "C" studs. Erect vertical framing, and when required install horizontal framing members, according to the curtain wall system manufacturer's guidelines. Maximum 48 inch on center vertical framing spacing. Maximum 72 inch on center horizontal framing spacing. Locate transoms a minimum height of 33 inches above the top surface of the concrete floor assembly (Item 1) as measured from the bottom of the transom.

D. Aluminum Panels: Install aluminum panels to aluminum framing (Item 2B) according to the curtain wall system manufacturer's guidelines. Use a minimum 1/8-inch thick aluminum sheet panel with maximum dimensions of 60 by 72 inches.

E. Impaling Pins: When pins are used instead of screws to secure curtain wall insulation (Item 2F), position them in the same manner as the screws in Item 2F, sized and installed according to the curtain wall system manufacturer's guidelines, or be a min. 4-1/2 inch long, 12 GA steel pin attached to a nominal 2 by 2 inch galvanized sheet steel plate, a nominal 2 by 2 by 2 inch long angle, or directly attached to the framing using a stud gun. Space pins a maximum of 12 inches on center and install around the curtain wall insulation (Item 2F) periphery so that the interior face of the curtain wall insulation is flush with the interior face of the framing.

F. Curtain Wall Insulation: Use only materials bearing an Intertek Certified Product Label and meeting the following minimum requirements. Insulate all spandrel panels using a minimum 4 inch thick, 4 pcf, or 2 inch thick, 8 pcf, mineral wool batt insulation faced on one side with aluminum foil scrim (vapor retarder), which is exposed to the room interior. Fill the spandrel panel area completely. Fill the cavity of all "C"-shaped studs with batt insulation.

i. Fit curtain wall insulation tightly between vertical framing members, secured with screws placed a maximum 8 inches on center attached to a minimum 16 GA angle around the entire perimeter of each piece of curtain wall insulation (batt). Attach the vertical 16 GA angles to the mullions with screws. At the horizontal butt joints of the curtain wall insulation in the field of the glass spandrel panels (Item 2C), place the horizontal angles back-to-back to form a "T", which is located at the horizontal centerline of the perimeter joint protection (Item 3). Locate all other horizontal seams in the curtain wall insulation at least 6 inches from the top surface of the perimeter joint protection (Item 3).

ii. Position the interior face of the curtain wall insulation (batts) flush with the interior face of the aluminum framing (Item 2B). Create a minimum 2-inch air space between the glass spandrel panels (Item 2C) and the curtain wall insulation. Install the 36-inch wide curtain wall insulation (batts) without vertical seams, spanning the full distance between the vertical and horizontal aluminum framing (Item 2B), which create the spandrel panel area.

Division 07-Thermal and Moisture Protection
07 84 00 Firestopping
07 84 43 Fire-Resistance Joint sealants

F. **Framing Covers:** Install perimeter joint protection (Item 3) before this material. Use only materials bearing an Intertek Certified Product Label and meeting the following minimum requirements. Do not deform the perimeter joint protection (Item 3) during or after installation of framing covers. Use Strips minimum 1 inch thick by 4 inch wide, 8 pcf, mineral wool batt insulation faced on one side with aluminum foil scrim (vapor retarder) exposed to the room's interior. Center framing covers over each vertical framing member and secured to the member with impaling pins (Item 2D) spaced nominally 12 inches. Do not pass framing covers through the perimeter joint protection. Butt framing covers to the top and bottom surfaces of the perimeter joint protection. Seal the sides of the framing covers with minimum 3-inch wide aluminum foil tape.

3. **PERIMETER JOINT PROTECTION** – Maximum 8 inch nominal joint width (joint width at installation) of perimeter joint (linear opening). Perimeter joint protection incorporates the following construction features:

A. **Packing Material** – Use only materials bearing an Intertek Certified Product Label and meeting the following minimum requirements. Use a minimum 4 inch thick, 4 pcf density, mineral wool batt insulation installed to fill all openings with the fibers running parallel to the concrete slab (Item 1A) edge and curtain wall assembly (Item 2). Compress packing material 33.34% in the nominal joint width. Install top of packing material flush with the top surface of the concrete slab (Item 1A). Tightly compress together splices (butt joints) in the lengths of packing material.

B. **CERTIFIED MANUFACTURER:**
Grabber Construction Products
CERTIFIED PRODUCT: Sealant
MODEL: Grabbergard EFS

Fill, Void or Cavity Material – Apply sealant, (sprayed, brushed, or painted), to cover the top exposed surface of the packing material (Item 3A) compressed in the perimeter joint. Apply a minimum dry film thickness of 1/16 inch and overlap sealant a minimum 1 inch onto the adjacent curtain wall assembly (Item 2) and floor assembly (Item 1). After stopping the application process, and when the applied liquid cures to an elastomeric film before process is restarted, then overlap the edge of the cured sealant at least 1/8 inch with the new sealant being applied.

C. **Support Clips:** (Not Shown – Optional) Recommend use of support clips for when vertical movement required. Standard Z-shaped clips consist of 20 GA galvanized steel with the following dimensions: 1 inch wide by 3 inch high with a 2 inch upper leg and 3 inch lower leg.

Division 07-Thermal and Moisture Protection
07 84 00 Firestopping
07 84 43 Fire-Resistance Joint sealants

JWA/JS 120-13
CEJ 612 P
PERIMETER JOINT PROTECTION

CERTIFIED PRODUCT: Grabbergard EFS
ASTM E 2307-04
T-Rating – 3/4 hr.
F-Rating – 2 hr.
ASTM E 1966-01
CYCLING TYPE IV: ± 16.7% Horizontal Movement @ 50% Compression (Reference Item 3A)

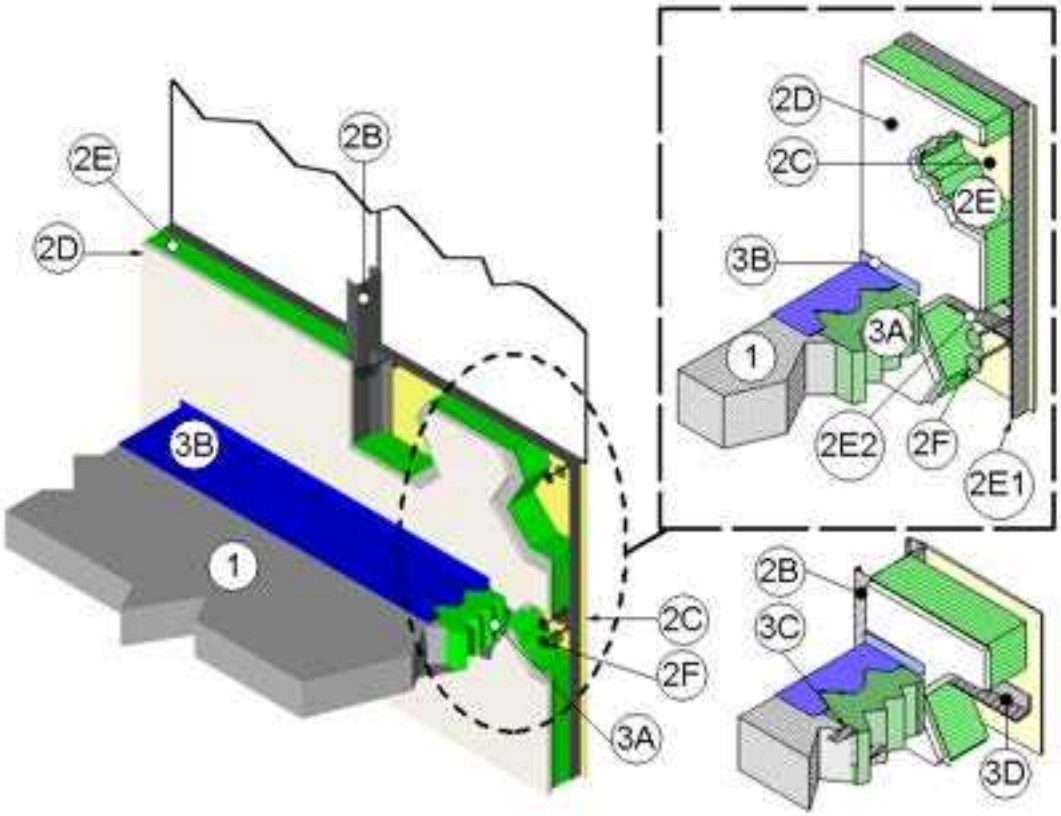

1. **FLOOR ASSEMBLY** – The floor assembly consists of the following construction features:

   A. Two-hour rated reinforced concrete slab using either nominal density 100 pcf lightweight or nominal density 150 pcf normal weight concrete with a minimum thickness of 4-1/2-inches.

   B. When required to accommodate the installation of an architectural joint system, increase overall concrete slab (Item 1A) thickness. Maintain minimum 4-1/2-inch thickness below blockout (longitudinal recesses) formed in the concrete slab (Item 1A) to accommodate the architectural joint system. Vary blockout width without restriction.

Division 07-Thermal and Moisture Protection
07 84 00 Firestopping
07 84 43 Fire-Resistance Joint sealants

2. **CURTAIN WALL ASSEMBLY:** The curtain wall assembly incorporates the following construction features:

A. Mounting Attachment: (Not Shown) Attach curtain wall framing to the structural framing according to the curtain wall manufacturer's instructions. When required, connect the mounting attachments to the floor slab to the joint face of the floor slab, according to the curtain wall manufacturer's instructions. Maximum 10-foot distance between mounting attachments.

B. Steel-Stud Framing: Erect vertical framing members using a minimum 5-1/2 inch by 1-5/8 inch, 18 GA steel "C" studs. Erect vertical framing, and when required install horizontal framing members, according to the curtain wall system manufacturer's guidelines. Maximum 48 inch on center vertical framing spacing. Maximum 72 inch on center horizontal framing spacing. Locate transoms a minimum height of 33 inches above the top surface of the concrete floor assembly (Item 1) as measured from the bottom of the transom.

C. Glass Panels: Install glass spandrel and vision panels according to curtain wall framing and the curtain wall system manufacturer's guidelines. Use a minimum 1/4 inch thick, clear tempered glass with a maximum width of 47 inches and height of 71 inches. Secure glass spandrel panels with a thermal break (thermoset rubber extrusion), pressure bar (aluminum extrusion), 1/4-20 x 5/8 in. long screws, and a snap face (aluminum extrusion). Insulate the glass spandrel panels shall be insulated according to Item 2F

D. Interior Curtain Wall Surface: Install perimeter joint treatment (Item 3) before this material. Cover interior face of steel-stud framing (Item 2B) with one layer of minimum 5/8 inch thick, Type X gypsum board. The joint face of the curtain wall assembly (Item 2) covered as shown with one layer of gypsum wallboard. Fasten gypsum board to steel-stud framing (Item 2B) with minimum #6 1-1/8 inches long bugle-head phillips drywall screws spaced 12 inches on center.

1. **Joint Tape and Compound** – Apply vinyl or casein, dry or premixed joint compound to face layer of gypsum board (Item 2F) in two coats to all exposed screw heads and gypsum board steel-stud framing (Item 2B) butt joints. A minimum 2-inch wide paper, plastic or fiberglass tape embedded in first layer of compound over joints in gypsum board (Item 2F).
2. Create a minimum 3-5/8 inch cavity between unexposed side of gypsum wallboard (Item 2F) to unexposed side of glass panel (Item 2D).

E. Curtain Wall Insulation: Use only materials bearing an Intertek Certified Product Label and meeting the following minimum requirements. Insulate all spandrel panels using a minimum 4 inch thick, 4 pcf, or 2 inch thick, 8 pcf, mineral wool batt insulation faced on one side with aluminum foil scrim (vapor retarder), which is exposed to the room interior. Fill the spandrel panel area completely. Fill the cavity of all "C"-shaped studs with batt insulation.

i. Fit curtain wall insulation tightly between vertical framing members, secured with screws placed a maximum 8 inches on center attached to a minimum 16 GA angle around the entire perimeter of each piece of curtain wall insulation (batt). Attach the vertical 16 GA angles to the mullions with screws. At the horizontal butt joints of the curtain wall insulation in the field of the glass spandrel panels (Item 2C), place the horizontal angles back-to-back to form a "T", which is located at the horizontal centerline of the perimeter joint protection (Item 3). Locate all other horizontal seams in the curtain wall insulation at least 6 inches from the top surface of the perimeter joint protection (Item 3).

ii. Position the interior face of the curtain wall insulation (batts) flush with the interior face of the aluminum framing (Item 2B). Create a minimum 1-1/2-inch air space between the glass spandrel panels (Item 2C) and the curtain wall insulation. Install the 36-inch wide curtain wall insulation (batts) without vertical seams, spanning the full distance between the vertical and horizontal aluminum framing (Item 2B), which create the spandrel panel area.

F. **Impaling Pins:** When pins are used instead of screws to secure curtain wall insulation (Item 2F), position them in the same manner as the screws in Item 2F, sized and installed according to the curtain wall system manufacturer's guidelines, or be a min. 4-1/2 inch long, 12 GA steel pin attached to a nominal 2 by 2 inch galvanized sheet steel plate, a nominal 2 by 2 by 2 inch long angle, or directly attached to the framing using a stud gun. Space pins a maximum of 12 inches on center and install around the curtain wall insulation (Item 2F) periphery so that the interior face of the curtain wall insulation is flush with the interior face of the framing

3. **PERIMETER JOINT PROTECTION** – Maximum 8 inch nominal joint width (joint width at installation) of perimeter joint (linear opening). Perimeter joint protection incorporates the following construction features:

A. **Packing Material** – Use only materials bearing an Intertek Certified Product Label and meeting the following minimum requirements. Use a minimum 4 inch thick, 4 pcf density, mineral wool batt insulation installed to fill all openings with the fibers running parallel to the concrete slab (Item 1A) edge and curtain wall assembly (Item 2). Compress packing material 50% in the nominal joint width. Install top of packing material flush with the top surface of the concrete slab (Item 1A). Tightly compress together splices (butt joints) in the lengths of packing material.

B. **CERTIFIED MANUFACTURER:**
Grabber Construction Products
CERTIFIED PRODUCT: Sealant
MODEL: Grabbergard EFS
Fill, Void or Cavity Material – Apply sealant, (sprayed, brushed, or painted), to cover the top exposed surface of the packing material (Item 3A) compressed in the perimeter joint. Apply a minimum dry film thickness of 1/16 inch and overlap sealant a minimum 1 inch onto the adjacent curtain wall assembly (Item 2) and floor assembly (Item 1). After stopping the application process, and when the applied liquid cures to an elastomeric film before process is restarted, then overlap the edge of the cured sealant at least 1/8 inch with the new sealant being applied.

C. **Support Clips:** (Not Shown – Optional) Recommend use of support clips for when vertical movement required. Standard Z-shaped clips consist of 20 GA galvanized steel with the following dimensions: 1 inch wide by 3 inch high with a 2 inch upper leg and 3 inch lower leg.

D. **Support Angle:** Horizontally install a minimum 24 GA 1.5 inch x 1.5 inch steel angle mechanically fastened to the interior of the tilt-up panels (Item 2C) at the mid point location of the packing material (Item 3A). When 16 GA support angles are used Z-clips (Item 3C) are not required.

"If it's worth building, it's worth GRABBER®" www.grabberman.com

Division 07-Thermal and Moisture Protection
07 84 00 Firestopping
07 84 43 Fire-Resistance Joint sealants

JWA/JS 120-14
CEJ 613 P
PERIMETER JOINT PROTECTION

CERTIFIED PRODUCT: Grabbergard EFS
ASTM E 2307-04
T-Rating – 3/4 hr.
F-Rating – 2 hr.
ASTM E 1966-01
CYCLING TYPE IV: ± 16.7% Horizontal Movement @ 33.34% Compression (Reference Item 3A)

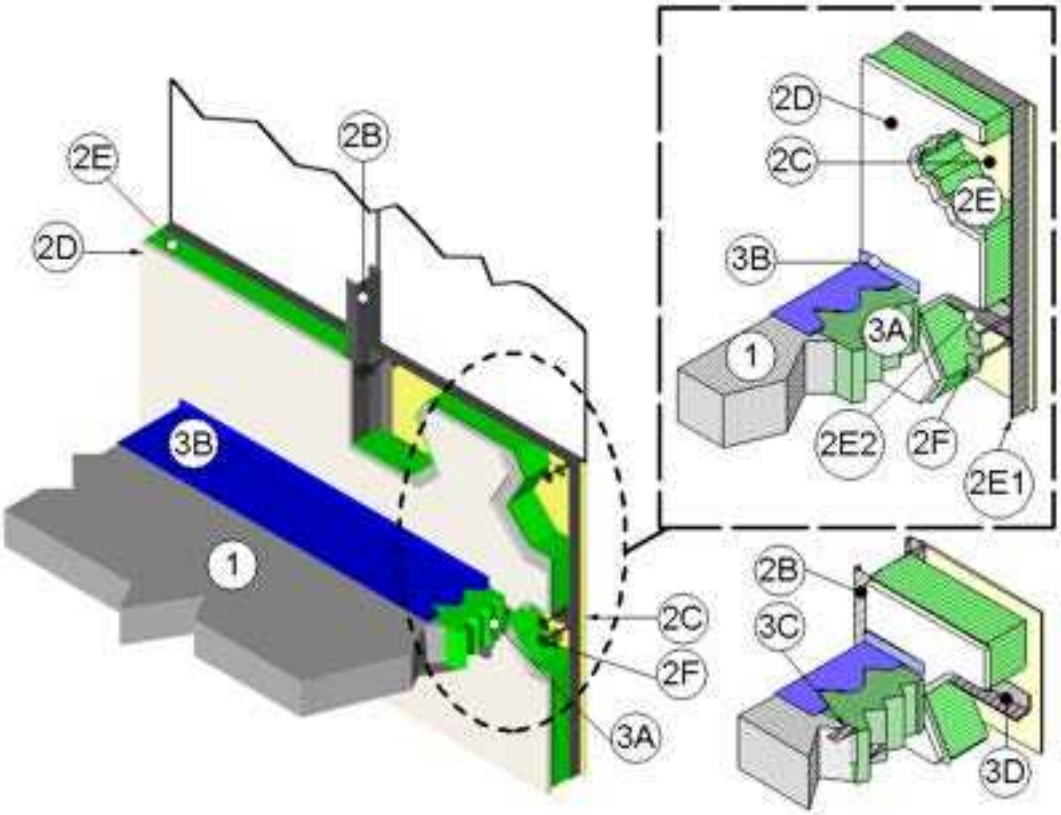

1. **FLOOR ASSEMBLY** – The floor assembly consists of the following construction features:

   A. Two-hour rated reinforced concrete slab using either nominal density 100 pcf lightweight or nominal density 150 pcf normal weight concrete with a minimum thickness of 4-1/2-inches.

   B. When required to accommodate the installation of an architectural joint system, increase overall concrete slab (Item 1A) thickness. Maintain minimum 4-1/2-inch thickness below blockout (longitudinal recesses) formed in the concrete slab (Item 1A) to accommodate the architectural joint system. Vary blockout width without restriction.

Division 07-Thermal and Moisture Protection
07 84 00 Firestopping
07 84 43 Fire-Resistance Joint sealants

2. **CURTAIN WALL ASSEMBLY:** The curtain wall assembly incorporates the following construction features:

A. Mounting Attachment: (Not Shown) Attach curtain wall framing to the structural framing according to the curtain wall manufacturer's instructions. When required, connect the mounting attachments to the floor slab to the joint face of the floor slab, according to the curtain wall manufacturer's instructions. Maximum 10-foot distance between mounting attachments.

B. Steel-Stud Framing: Erect vertical framing members using a minimum 5-1/2 inch by 1-5/8 inch, 18 GA steel "C" studs. Erect vertical framing, and when required install horizontal framing members, according to the curtain wall system manufacturer's guidelines. Maximum 48 inch on center vertical framing spacing. Maximum 72 inch on center horizontal framing spacing. Locate transoms a minimum height of 33 inches above the top surface of the concrete floor assembly (Item 1) as measured from the bottom of the transom.

C. Aluminum Panels: Install aluminum panels to aluminum framing (Item 2B) according to the curtain wall system manufacturer's guidelines. Use a minimum 1/8-inch thick aluminum sheet panel with maximum dimensions of 60 by 72 inches.

D. Interior Curtain Wall Surface: Install perimeter joint treatment (Item 3) before this material. Cover interior face of steel-stud framing (Item 2B) with one layer of minimum 5/8 inch thick, Type X gypsum board. The joint face of the curtain wall assembly (Item 2) covered as shown with one layer of gypsum wallboard. Fasten gypsum board to steel-stud framing (Item 2B) with minimum #6 1-1/8 inches long bugle-head phillips drywall screws spaced 12 inches on center.

1. **Joint Tape and Compound** – Apply vinyl or casein, dry or premixed joint compound to face layer of gypsum board (Item 2F) in two coats to all exposed screw heads and gypsum board steel-stud framing (Item 2B) butt joints. A minimum 2-inch wide paper, plastic or fiberglass tape embedded in first layer of compound over joints in gypsum board (Item 2F).
2. Create a minimum 3-5/8 inch cavity between unexposed side of gypsum wallboard (Item 2F) to unexposed side of glass panel (Item 2D).

E. Curtain Wall Insulation: Use only materials bearing an Intertek Certified Product Label and meeting the following minimum requirements. Insulate all spandrel panels using a minimum 4 inch thick, 4 pcf, or 2 inch thick, 8 pcf, mineral wool batt insulation faced on one side with aluminum foil scrim (vapor retarder), which is exposed to the room interior. Fill the spandrel panel area completely. Fill the cavity of all "C"-shaped studs with batt insulation.

i. Fit curtain wall insulation tightly between vertical framing members, secured with screws placed a maximum 8 inches on center attached to a minimum 16 GA angle around the entire perimeter of each piece of curtain wall insulation (batt). Attach the vertical 16 GA angles to the mullions with screws. At the horizontal butt joints of the curtain wall insulation in the field of the glass spandrel panels (Item 2C), place the horizontal angles back-to-back to form a "T", which is located at the horizontal centerline of the perimeter joint protection (Item 3). Locate all other horizontal seams in the curtain wall insulation at least 6 inches from the top surface of the perimeter joint protection (Item 3).

ii. Position the interior face of the curtain wall insulation (batts) flush with the interior face of the aluminum framing (Item 2B). Create a minimum 2-inch air space between the aluminum panels (Item 2C) and the curtain wall insulation. Install the 36-inch wide curtain wall insulation (batts) without vertical seams, spanning the full distance between the vertical and horizontal aluminum framing (Item 2B), which create the spandrel panel area.

F. Impaling Pins: When pins are used instead of screws to secure curtain wall insulation (Item 2F), position them in the same manner as the screws in Item 2F, sized and installed according to the curtain wall system manufacturer's guidelines, or be a min. 4-1/2 inch long, 12 GA steel pin attached to a nominal 2 by 2 inch galvanized sheet steel plate, a nominal 2 by 2 by 2 inch long angle, or directly attached to the framing using a stud gun. Space pins a maximum of 12 inches on center and install around the curtain wall insulation (Item 2F) periphery so that the interior face of the curtain wall insulation is flush with the interior face of the framing

"If it's worth building, it's worth GRABBER®" www.grabberman.com

Division 07-Thermal and Moisture Protection
07 84 00 Firestopping
07 84 43 Fire-Resistance Joint sealants

3. **PERIMETER JOINT PROTECTION** – Maximum 8 inch nominal joint width (joint width at installation) of perimeter joint (linear opening). Perimeter joint protection incorporates the following construction features:

   A. Packing Material – Use only materials bearing an Intertek Certified Product Label and meeting the following minimum requirements. Use a minimum 4 inch thick, 4 pcf density, mineral wool batt insulation installed to fill all openings with the fibers running parallel to the concrete slab (Item 1A) edge and curtain wall assembly (Item 2). Compress packing material 33.34% in the nominal joint width. Install top of packing material flush with the top surface of the concrete slab (Item 1A). Tightly compress together splices (butt joints) in the lengths of packing material.

   B. CERTIFIED MANUFACTURER:
   Grabber Construction Products
   CERTIFIED PRODUCT: Sealant
   MODEL: Grabbergard EFS
   Fill, Void or Cavity Material – Apply sealant, (sprayed, brushed, or painted), to cover the top exposed surface of the packing material (Item 3A) compressed in the perimeter joint. Apply a minimum dry film thickness of 1/16 inch and overlap sealant a minimum 1 inch onto the adjacent curtain wall assembly (Item 2) and floor assembly (Item 1). After stopping the application process, and when the applied liquid cures to an elastomeric film before process is restarted, then overlap the edge of the cured sealant at least 1/8 inch with the new sealant being applied.

   C. Support Clips: (Not Shown – Optional) Recommend use of support clips for when vertical movement required. Standard Z-shaped clips consist of 20 GA galvanized steel with the following dimensions: 1 inch wide by 3 inch high with a 2 inch upper leg and 3 inch lower leg.

   D. Support Angle: Horizontally install a minimum 24 GA 1.5 inch x 1.5 inch steel angle mechanically fastened to the interior of the tilt-up panels (Item 2C) at the mid point location of the packing material (Item 3A). When 16 GA support angles are used Z-clips (Item 3C) are not required.

Division 07-Thermal and Moisture Protection
07 84 00 Firestopping
07 84 43 Fire-Resistance Joint sealants

JWA/JS 120-15
CEJ 614 P
PERIMETER JOINT PROTECTION

CERTIFIED PRODUCT: Grabbergard EFS
ASTM E 2307-04
T-Rating – 1/4 hr.
F-Rating – 2 hr.
ASTM E 1966-01
CYCLING TYPE IV: ± 15% Horizontal Movement @ 50% Compression (Reference Item 3A)

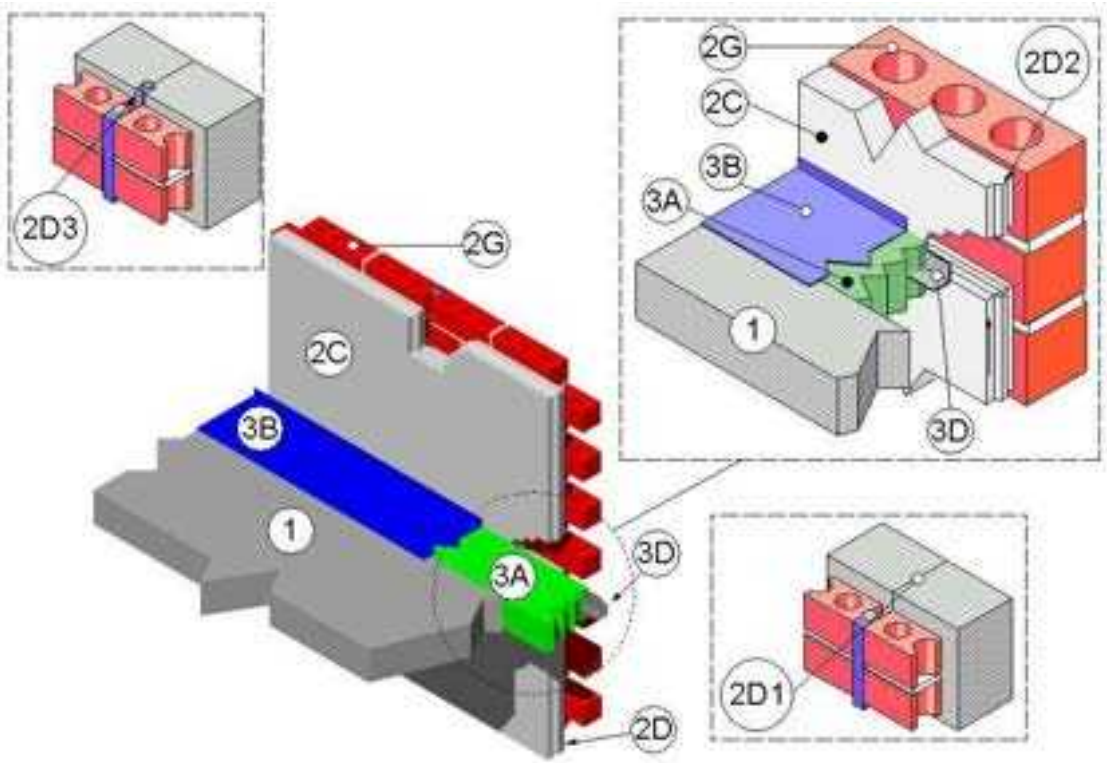

1. **FLOOR ASSEMBLY** – The floor assembly consists of the following construction features:
   - **A.** Two-hour rated reinforced concrete slab using either nominal density 100 pcf lightweight or nominal density 150 pcf normal weight concrete with a minimum thickness of 4-1/2-inches.
   - **B.** When required to accommodate the installation of an architectural joint system, increase overall concrete slab (Item 1A) thickness. Maintain minimum 4-1/2-inch thickness below blockout (longitudinal recesses) formed in the concrete slab (Item 1A) to accommodate the architectural joint system. Vary blockout width without restriction.
2. **CURTAIN WALL ASSEMBLY:** The curtain wall assembly incorporates the following construction features:
   - **A. Mounting Attachment:** (Not Shown) Attach curtain wall framing to the structural framing according to the curtain wall manufacturer's instructions. When required, connect the mounting attachments to the floor slab to the joint face of the floor slab, according to the curtain wall manufacturer's instructions. Maximum 10-foot distance between mounting attachments.

B. **Structural Framing:** (Not shown) Provide structural framing members according to the curtain wall system manufacturer's requirements. Aluminum structural framing must be completely covered by concrete panels.

C. **Tilt-up Panels:** Tilt-up concrete wall panels, minimum 2-1/2 inches thick, reinforced lightweight or normal weight (100 – 150 pcf). Install tilt-up panels to structural framing (Item 2B) according to the curtain wall system manufacturer's requirements.

D. **Tilt-up Panel Joints:** Use either flush type (butt joint) (Item 2D1) or key way type (tongue and groove) (Item 2D2) for vertical and horizontal tilt-up panel joints. All tilt-up panel edges at butt joints in contact with each other. When required, seal the surface of the tilt-up panel joints with gaskets or sealant (Item 2D3).

E. **Curtain Wall Insulation:** (Not Shown – Optional) Install perimeter joint protection (Item 3) before this material. Use only materials bearing an Intertek Certified Product Label and meeting the following minimum requirements. Do not deform the perimeter joint protection (Item 3) during or after installation of curtain wall insulation. Use either mineral wool or fiberglass insulation batts.

F. **Impaling Pins:** (Not Shown – Optional) When pins are used position, size and install them according to the curtain wall system manufacturer's guidelines.

G. **Exterior Curtain Wall Surface:** Use a minimum 4-inch thick brick veneer applied in accordance with standard construction practices using a cement-based mortar.

3. **PERIMETER JOINT PROTECTION** – Maximum 8 inch nominal joint width (joint width at installation) of perimeter joint (linear opening). Perimeter joint protection incorporates the following construction features:

A. **Packing Material** – Use only materials bearing an Intertek Certified Product Label and meeting the following minimum requirements. Use a minimum 4 inch thick, 4 pcf density, mineral wool batt insulation installed to fill all openings with the fibers running parallel to the concrete slab (Item 1A) edge and curtain wall assembly (Item 2). Compress packing material 50% in the nominal joint width. Install top of packing material flush with the top surface of the concrete slab (Item 1A). Tightly compress together splices (butt joints) in the lengths of packing material.

B. **CERTIFIED MANUFACTURER:**
Grabber Construction Products
CERTIFIED PRODUCT: Sealant
MODEL: Grabbergard EFS
Fill, Void or Cavity Material – Apply sealant, (sprayed, brushed, or painted), to cover the top exposed surface of the packing material (Item 3A) compressed in the perimeter joint. Apply a minimum dry film thickness of 1/16 inch and overlap sealant a minimum 1 inch onto the adjacent curtain wall assembly (Item 2) and floor assembly (Item 1). After stopping the application process, and when the applied liquid cures to an elastomeric film before process is restarted, then overlap the edge of the cured sealant at least 1/8 inch with the new sealant being applied.

C. **Support Clips:** (Not Shown – Optional) Required when using 24 GA Support Angle (Item 3D), use standard Z-shaped clips consist of 20 GA galvanized steel with the following dimensions: 1 inch wide by 3 inch high with a 2 inch upper leg and 3 inch lower leg.

D. **Support Angle:** Horizontally install a minimum 24 GA 1.5 inch x 1.5 inch steel angle mechanically fastened to the interior of the tilt-up panels (Item 2C) at the mid point location of the packing material (Item 3A). When 16 GA support angles are used Z-clips (Item 3C) are not required.

"If it's worth building, it's worth GRABBER®" www.grabberman.com

Division 07-Thermal and Moisture Protection
07 84 00 Firestopping
07 84 43 Fire-Resistance Joint sealants

JWA/JS 120-16
CEJ 615 P
PERIMETER JOINT PROTECTION

CERTIFIED PRODUCT: Grabbergard EFS
ASTM E 2307-04
T-Rating – 1/4 hr.
F-Rating – 2 hr.
ASTM E 1966-01
CYCLING TYPE IV: ± 15% Horizontal Movement @ 50% Compression (Reference Item 3A)

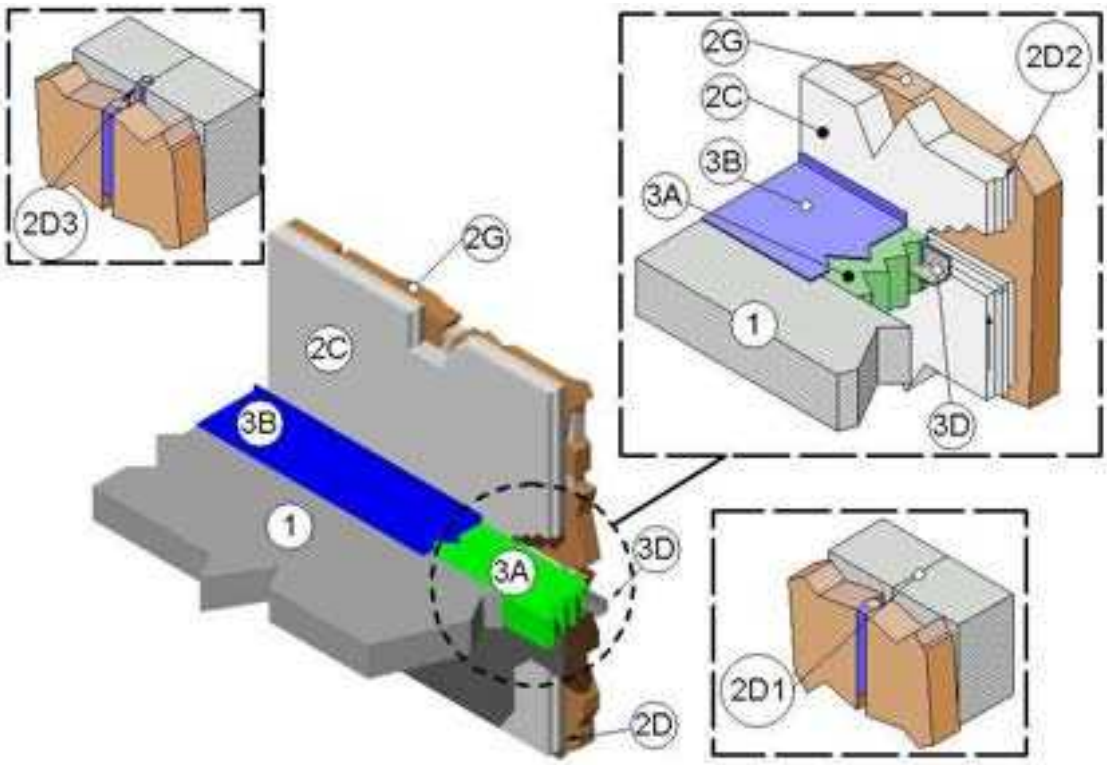

1. **FLOOR ASSEMBLY** – The floor assembly consists of the following construction features:
   - **A.** Two-hour rated reinforced concrete slab using either nominal density 100 pcf lightweight or nominal density 150 pcf normal weight concrete with a minimum thickness of 4-1/2-inches.
   - **B.** When required to accommodate the installation of an architectural joint system, increase overall concrete slab (Item 1A) thickness. Maintain minimum 4-1/2-inch thickness below blockout (longitudinal recesses) formed in the concrete slab (Item 1A) to accommodate the architectural joint system. Vary blockout width without restriction.
2. **CURTAIN WALL ASSEMBLY:** The curtain wall assembly incorporates the following construction features:
   - **A. Mounting Attachment:** (Not Shown) Attach curtain wall framing to the structural framing according to the curtain wall manufacturer's instructions. When required, connect the mounting attachments to the floor slab to the joint face of the floor slab, according to the curtain wall manufacturer's instructions. Maximum 10-foot distance between mounting attachments.

B. **Structural Framing:** (Not shown) Provide structural framing members according to the curtain wall system manufacturer's requirements. Aluminum structural framing must be completely covered by concrete panels.

C. **Tilt-up Panels**: Tilt-up concrete wall panels, minimum 2-1/2 inches thick, reinforced lightweight or normal weight (100 – 150 pcf). Install tilt-up panels to structural framing (Item 2B) according to the curtain wall system manufacturer's requirements.

D. **Tilt-up Panel Joints:** Use either flush type (butt joint) (Item 2D1) or key way type (tongue and groove) (Item 2D2) for vertical and horizontal tilt-up panel joints. All tilt-up panel edges at butt joints in contact with each other. When required, seal the surface of the tilt-up panel joints with gaskets or sealant (Item 2D3).

E. **Curtain Wall Insulation:** (Not Shown – Optional) Install perimeter joint protection (Item 3) before this material. Use only materials bearing an Intertek Certified Product Label and meeting the following minimum requirements. Do not deform the perimeter joint protection (Item 3) during or after installation of curtain wall insulation. Use either mineral wool or fiberglass insulation batts.

F. **Impaling Pins:** (Not Shown – Optional) When pins are used position, size and install them according to the curtain wall system manufacturer's guidelines.

G. **Exterior Curtain Wall Surface:** Use a minimum 2-inch thick stone veneer applied in accordance with standard construction practices using a cement-based mortar.

3. **PERIMETER JOINT PROTECTION** – Maximum 8 inch nominal joint width (joint width at installation) of perimeter joint (linear opening). Perimeter joint protection incorporates the following construction features:

A. **Packing Material** – Use only materials bearing an Intertek Certified Product Label and meeting the following minimum requirements. Use a minimum 4 inch thick, 4 pcf density, mineral wool batt insulation installed to fill all openings with the fibers running parallel to the concrete slab (Item 1A) edge and curtain wall assembly (Item 2). Compress packing material 50% in the nominal joint width. Install top of packing material flush with the top surface of the concrete slab (Item 1A). Tightly compress together splices (butt joints) in the lengths of packing material.

B. **CERTIFIED MANUFACTURER:**
Grabber Construction Products
CERTIFIED PRODUCT: Sealant
MODEL: Grabbergard EFS
Fill, Void or Cavity Material – Apply sealant, (sprayed, brushed, or painted), to cover the top exposed surface of the packing material (Item 3A) compressed in the perimeter joint. Apply a minimum dry film thickness of 1/16 inch and overlap sealant a minimum 1 inch onto the adjacent curtain wall assembly (Item 2) and floor assembly (Item 1). After stopping the application process, and when the applied liquid cures to an elastomeric film before process is restarted, then overlap the edge of the cured sealant at least 1/8 inch with the new sealant being applied.

C. **Support Clips:** (Not Shown – Optional) Required when using 24 GA Support Angle (Item 3D), use standard Z-shaped clips consist of 20 GA galvanized steel with the following dimensions: 1 inch wide by 3 inch high with a 2 inch upper leg and 3 inch lower leg.

D. **Support Angle:** Horizontally install a minimum 24 GA 1.5 inch x 1.5 inch steel angle mechanically fastened to the interior of the tilt-up panels (Item 2C) at the mid point location of the packing material (Item 3A). When 16 GA support angles are used Z-clips (Item 3C) are not required.

"If it's worth building, it's worth GRABBER®" www.grabberman.com

Division 07-Thermal and Moisture Protection
07 84 00 Firestopping
07 84 43 Fire-Resistance Joint sealants

JWA/JS 120-17
CEJ 616 P
PERIMETER JOINT PROTECTION

CERTIFIED PRODUCT: Grabbergard EFS
ASTM E 2307-04
T-Rating – 1 hr.
F-Rating – 2 hr.
ASTM E 1966-01
CYCLING TYPE IV: ± 16.7% Horizontal Movement @ 33% Compression (Reference Item 3A)

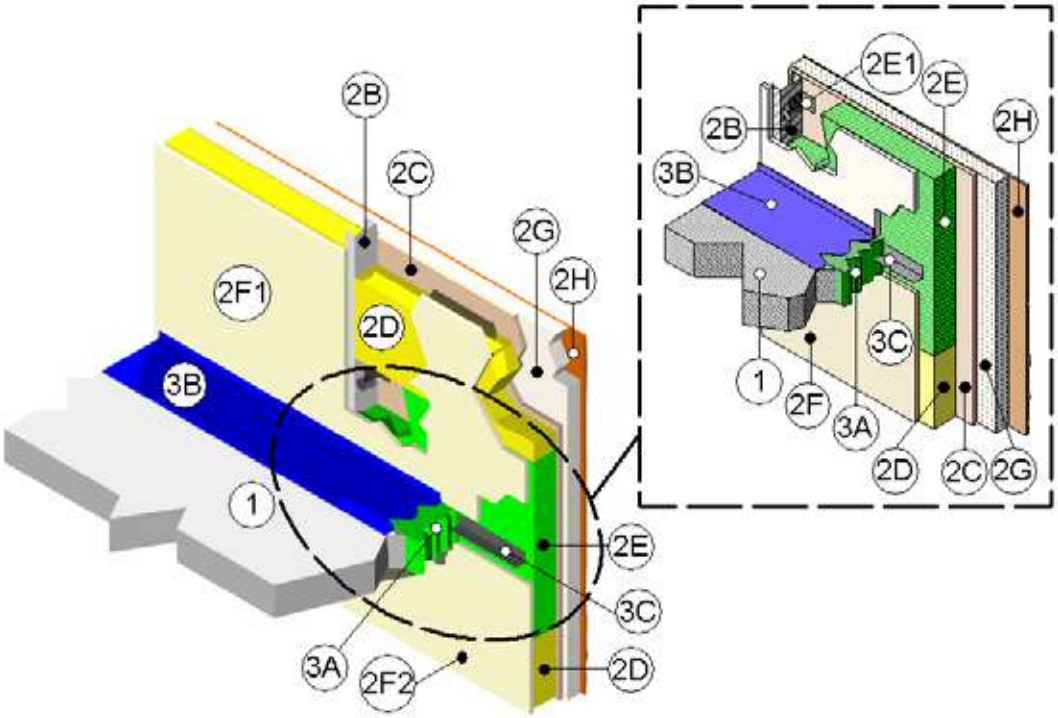

1. **FLOOR ASSEMBLY** – The floor assembly consists of the following construction features:
   - **A.** Two-hour rated reinforced concrete slab using either nominal density 100 pcf lightweight or nominal density 150 pcf normal weight concrete with a minimum thickness of 4-1/2-inches.
   - **B.** When required to accommodate the installation of an architectural joint system, increase overall concrete slab (Item 1A) thickness. Maintain minimum 4-1/2-inch thickness below blockout (longitudinal recesses) formed in the concrete slab (Item 1A) to accommodate the architectural joint system. Vary blockout width without restriction.
2. **CURTAIN WALL ASSEMBLY:** The curtain wall assembly incorporates the following construction features:
   - **A. Mounting Attachment:** (Not Shown) Attach curtain wall framing to the structural framing according to the curtain wall manufacturer's instructions. When required, connect the mounting attachments to the floor slab to the joint face of the floor slab, according to the curtain wall manufacturer's instructions. Maximum 10-foot distance between mounting attachments.

B. **Steel-Stud Framing:** Erect vertical framing members using a minimum 3-5/8 inch by 1-5/8 inch, 18 GA steel "C" studs. Erect vertical framing, and when required install horizontal framing members, according to the curtain wall system manufacturer's guidelines. Maximum 24 inch on center vertical framing spacing.

C. **Sandwiched Wall Surface:** Use a minimum 1/2-inch thick, 48-inch wide by 96 in. long, exterior grade gypsum wallboard (ASTM C 79), placed over and secured to framing with minimum 1-1/4 inch long Type S drywall screws spaced 8 inches on center.

D. **Curtain Wall Insulation:** Use only materials bearing an Intertek Certified Product Label and meeting the following minimum requirements. Install a nominal 24-inch wide by 48-inch tall by 4 inch thick faced or un-faced fiberglass insulation (batt) in each stud cavity in the steel stud framing (Item 2B). Completely fill the recess of the minimum 3-5/8 inch by 1-5/8 inch, 18 GA steel "C" studs with curtain wall insulation, except locations where the barrier insulation (Item 2E) in the steel stud framing (Item 2B) is installed.

E. **Barrier Insulation:** Use only materials bearing an Intertek Certified Product Label and meeting the following minimum requirements. Install a nominal 24-inch wide by 24-inch tall by 4 inch thick minimum 4 pcf un-faced mineral wool insulation (batt) in each stud cavity in the steel stud framing (Item 2B) at the floor assembly (Item 1) elevation so that nominal 12-inches of un-faced mineral wool insulation is above the surface of the perimeter joint protection (Item 3). Use a minimum un-faced mineral wool insulation (batt) length of 24-inches and fitted tightly between vertical framing members of the steel stud framing (Item 2B).

i. Mechanically fasten the un-faced mineral wool insulation (batt) with minimum 2 x 2 inch, 20 GA steel clips with a minimum 5 inch copper coated steel pin extending from the center of the side of the clip installed parallel with the sandwiched wall surface (Item 2C). Locate the steel clips within each stud cavity in the steel stud framing (Item 2B). Locate one pin within 1-inch of each corner of each piece of un-faced mineral wool insulation (batt) and not less than 12-inch on center. The un-faced mineral wool insulation (batt) shall completely fill the recess of the min. 3-5/8 in. by 1-5/8 in., 18 GA steel "C" studs.

Interior Curtain Wall Surface: Install perimeter joint treatment (Item 3) before this material. Cover interior face of steel-stud framing (Item 2B) with one layer of minimum 1/2 inch thick, Type X gypsum board (ASTM C 36). The joint face of the curtain wall assembly (Item 2) is not covered as shown with the 1/2 inch thick, Type X gypsum board (ASTM C 36). Fasten 1/2 inch thick, Type X gypsum board (ASTM C 36) to steel-stud framing (Item 2B) with minimum #6 1-1/8 inches long bugle-head phillips drywall screws spaced 12 inches on center. Continuously place gypsum wallboard (2F1) a minimum 72 inches above surface of perimeter joint protection (Item 3). Optional gypsum wallboard (2F2) below the floor assembly (Item 1).

i. **Joint Tape and Compound** – Apply vinyl or casein, dry or premixed joint compound to face layer of gypsum board (Item 2F) in two coats to all exposed screw heads and gypsum board steel-stud framing (Item 2B) butt joints. A minimum 2-inch wide paper, plastic or fiberglass tape embedded in first layer of compound over joints in gypsum board (Item 2F). Gypsum board installed below the slab is optional

F. **Exterior Curtain Wall Insulation:** Create an Exterior Insulation Finish System (EIFS) composed of expanded polystyrene foam (EPS) insulation, and an Exterior Curtain Wall Finish (Item 2H). Use a monolithic assembly without expansion or control joints as the EIFS system. Use EPS foam boards measuring nominal 24 inches wide by 48 inches long by 4 inches thick with a nominal density of 1 pcf. Attach the EPS foam to the sandwiched wall surface (Item 2C) using mechanical fasteners or an adhesive in accordance with manufacturer's recommendations. Install the EPS boards in a running bond (brick-like) pattern and staggered over sandwiched wall surface (Item 2C) joints. Apply pressure to the EPS boards to assist in the bonding process. Butt all EPS boards together with no gaps or voids between them. Allow a minimum of 12 hours before continuing the application process when using adhesive. Rasp the EPS boards to remove all irregular seams and establish a continuous flat surface.

G. **Exterior Curtain Wall Finish:** Apply the cementious base coat and reinforcing mesh over the Exterior Curtain Wall Insulation (Item 2G). Precut the mesh, which is a woven fiberglass reinforcement fabric that is compatible with the cementious base coat and finish coat materials. Apply 1/16 to 1/8-inch thick cementious base coat to the exposed surface of the EPS foam. Apply the mesh; embed the mesh into the cementious base coat using a trowel. Start at the middle and work outwards towards edges. Established a final thickness of approximately 1/16-inches of the cementious base coat with the mesh embedded. Let the cementious base coat dry completely before applying the cementious finish coat, which is a cement-based wall coating which may contain silica sand or marble aggregates. Apply the cementious finish coat using a trowel in the same manner as the cementious base coat.

H. **Exterior Curtain Wall Finish:** Apply the cementious base coat and reinforcing mesh over the Exterior Curtain Wall Insulation (Item 2G). Precut the mesh, which is a woven fiberglass reinforcement fabric that is compatible with the cementious base coat and finish coat materials. Apply 1/16 to 1/8-inch thick cementious base coat to the exposed surface of the EPS foam. Apply the mesh; embed the mesh into the cementious base coat using a trowel. Start at the middle and work outwards towards edges. Established a final thickness of approximately 1/16-inches of the cementious base coat with the mesh embedded. Let the cementious base coat dry completely before applying the cementious finish coat, which is a cement-based wall coating which may contain silica sand or marble aggregates. Apply the cementious finish coat using a trowel in the same manner as the cementious base coat.

3. **PERIMETER JOINT PROTECTION** – Maximum 8 inch nominal joint width (joint width at installation) of perimeter joint (linear opening). Perimeter joint protection incorporates the following construction features:

A. **Packing Material** – Use only materials bearing an Intertek Certified Product Label and meeting the following minimum requirements. Use a minimum 4 inch thick, 4 pcf density, mineral wool batt insulation installed to fill all openings with the fibers running parallel to the concrete slab (Item 1A) edge and curtain wall assembly (Item 2). Compress packing material 33% in the nominal joint width. Install top of packing material flush with the top surface of the concrete slab (Item 1A). Tightly compress together splices (butt joints) in the lengths of packing material, minimum compression 0.25-in. per piece. Notch packing material to receive support angle (Item 3C) so that packing material is in contact with barrier insulation (Item 2E).

B. **CERTIFIED MANUFACTURER:**
Grabber Construction Products

CERTIFIED PRODUCT:
Sealant MODEL: Grabbergard EFS

C. **Fill, Void or Cavity Material** – Apply sealant, (sprayed, brushed, or painted), to cover the top exposed surface of the packing material (Item 3A) compressed in the perimeter joint. Apply a minimum dry film thickness of 1/16 inch and overlap sealant a minimum 1 inch onto the adjacent curtain wall assembly (Item 2F1) and floor assembly (Item 1). After stopping the application process, and when the applied liquid cures to an elastomeric film before process is restarted, then overlap the edge of the cured sealant at least 1/8 inch with the new sealant being applied.

D. **Support Angle:** Horizontally install a minimum 20 GA 2 inch x 2 inch steel angle mechanically fastened to the interior of the steel-stud framing (Item 2B) at the mid point location of the packing material (Item 3A).
Support Clips: (Not Shown – Optional) Recommend use of support clips for when vertical movement required. Standard Z-shaped clips consist of 20 GA galvanized steel with the following dimensions: 1 inch wide by 3 inch high with a 2 inch upper leg and 3 inch lower leg.

"If it's worth building, it's worth GRABBER®" www.grabberman.com

Division 07-Thermal and Moisture Protection
07 84 00 Firestopping
07 84 43 Fire-Resistance Joint sealants

JWA/JS 120-18
CEJ 617 P
PERIMETER JOINT PROTECTION

CERTIFIED PRODUCT: Grabbergard EFS
ASTM E 2307-04
T-Rating – 1 hr.
F-Rating – 2 hr.
ASTM E 1966-01
CYCLING TYPE IV: ± 16.7% Horizontal Movement @ 33% Compression (Reference Item 3A)

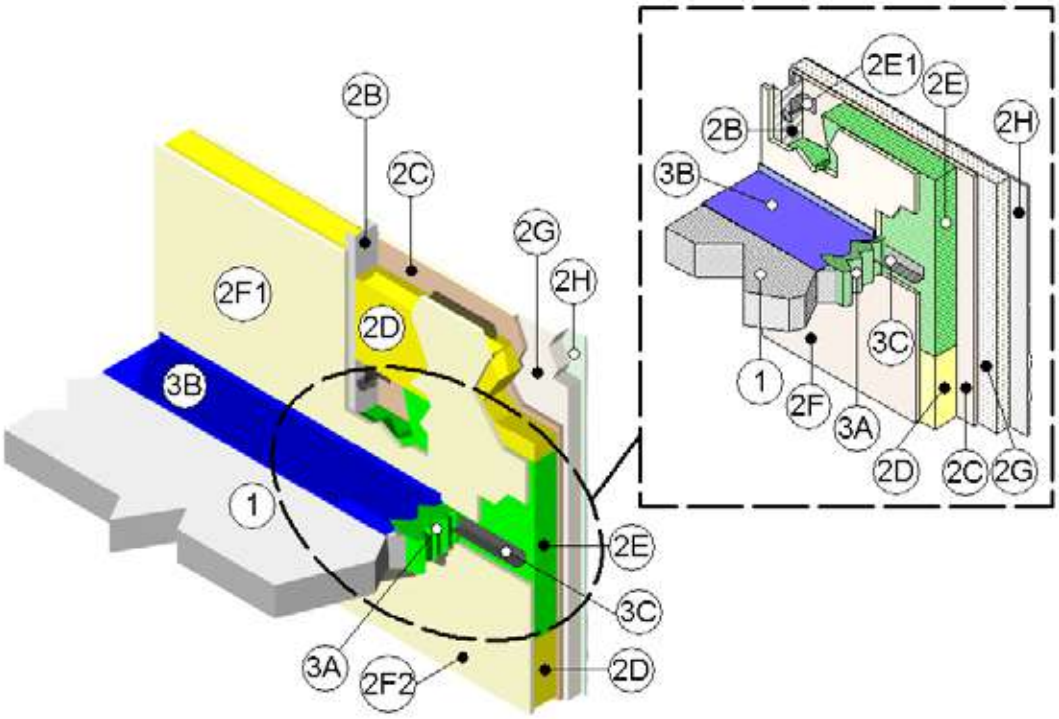

1. **FLOOR ASSEMBLY** – The floor assembly consists of the following construction features:
   - **A.** Two-hour rated reinforced concrete slab using either nominal density 100 pcf lightweight or nominal density 150 pcf normal weight concrete with a minimum thickness of 4-1/2-inches.
   - **B.** When required to accommodate the installation of an architectural joint system, increase overall concrete slab (Item 1A) thickness. Maintain minimum 4-1/2-inch thickness below blockout (longitudinal recesses) formed in the concrete slab (Item 1A) to accommodate the architectural joint system. Vary blockout width without restriction.
2. **CURTAIN WALL ASSEMBLY:** The curtain wall assembly incorporates the following construction features:
   - **A.** Mounting Attachment: (Not Shown) Attach curtain wall framing to the structural framing according to the curtain wall manufacturer's instructions. When required, connect the mounting attachments to the floor slab to the joint face of the floor slab, according to the curtain wall manufacturer's instructions. Maximum 10-foot distance between mounting attachments.

B. Steel-Stud Framing: Erect vertical framing members using a minimum 3-5/8 inch by 1-5/8 inch, 18 GA steel "C" studs. Erect vertical framing, and when required install horizontal framing members, according to the curtain wall system manufacturer's guidelines. Maximum 24 inch on center vertical framing spacing.

C. Sandwiched Wall Surface: Use a minimum 1/2-inch thick, 48-inch wide by 96 in. long, exterior grade gypsum wallboard (ASTM C 79), placed over and secured to framing with minimum 1-1/4 inch long Type S drywall screws spaced 8 inches on center.

D. Curtain Wall Insulation: Use only materials bearing an Intertek Certified Product Label and meeting the following minimum requirements. Install a nominal 24-inch wide by 48-inch tall by 4 inch thick faced or un-faced fiberglass insulation (batt) in each stud cavity in the steel stud framing (Item 2B). Completely fill the recess of the minimum 3-5/8 inch by 1-5/8 inch, 18 GA steel "C" studs with curtain wall insulation, except locations where the barrier insulation (Item 2E) in the steel stud framing (Item 2B) is installed.

E. Barrier Insulation: Use only materials bearing an Intertek Certified Product Label and meeting the following minimum requirements. Install a nominal 24-inch wide by 24-inch tall by 4 inch thick minimum 4 pcf un-faced mineral wool insulation (batt) in each stud cavity in the steel stud framing (Item 2B) at the floor assembly (Item 1) elevation so that nominal 12-inches of un-faced mineral wool insulation is above the surface of the perimeter joint protection (Item 3). Use a minimum un-faced mineral wool insulation (batt) length of 24-inches and fitted tightly between vertical framing members of the steel stud framing (Item 2B).

i. Mechanically fasten the un-faced mineral wool insulation (batt) with minimum 2 x 2 inch, 20 GA steel clips with a minimum 5 inch copper coated steel pin extending from the center of the side of the clip installed parallel with the sandwiched wall surface (Item 2C). Locate the steel clips within each stud cavity in the steel stud framing (Item 2B). Locate one pin within 1-inch of each corner of each piece of un-faced mineral wool insulation (batt) and not less than 12-inch on center. The un-faced mineral wool insulation (batt) shall completely fill the recess of the min. 3-5/8 in. by 1-5/8 in., 18 GA steel "C" studs.

F. Interior Curtain Wall Surface: Install perimeter joint treatment (Item 3) before this material. Cover interior face of steel-stud framing (Item 2B) with one layer of minimum 1/2 inch thick, Type X gypsum board (ASTM C 36). The joint face of the curtain wall assembly (Item 2) is not covered as shown with the 1/2 inch thick, Type X gypsum board (ASTM C 36). Fasten 1/2 inch thick, Type X gypsum board (ASTM C 36) to steel-stud framing (Item 2B) with minimum #6 1-1/8 inches long bugle-head phillips drywall screws spaced 12 inches on center. Continuously place gypsum wallboard (2F1) a minimum 72 inches above surface of perimeter joint protection (Item 3). Optional gypsum wallboard (2F2) below the floor assembly (Item 1).

i. **Joint Tape and Compound** – Apply vinyl or casein, dry or premixed joint compound to face layer of gypsum board (Item 2F) in two coats to all exposed screw heads and gypsum board steel-stud framing (Item 2B) butt joints. A minimum 2-inch wide paper, plastic or fiberglass tape embedded in first layer of compound over joints in gypsum board (Item 2F). Gypsum board installed below the slab is optional

G. Exterior Curtain Wall Insulation: Create an Exterior Insulation Finish System (EIFS) composed of expanded polystyrene foam (EPS) insulation, and an Exterior Curtain Wall Finish (Item 2H). Use a monolithic assembly without expansion or control joints as the EIFS system. Use EPS foam boards measuring nominal 24 inches wide by 48 inches long by 4 inches thick with a nominal density of 1 pcf. Attach the EPS foam to the sandwiched wall surface (Item 2C) using mechanical fasteners or an adhesive in accordance with manufacturer's recommendations. Install the EPS boards in a running bond (brick-like) pattern and staggered over sandwiched wall surface (Item 2C) joints. Apply pressure to the EPS boards to assist in the bonding process. Butt all EPS boards together with no gaps or voids between them. Allow a minimum of 12 hours before continuing the application process when using adhesive. Rasp the EPS boards to remove all irregular seams and establish a continuous flat surface.

"If it's worth building, it's worth GRABBER®" www.grabberman.com

H. **Exterior Curtain Wall Finish:** Apply the plaster base coat and reinforcing mesh over the Exterior Curtain Wall Insulation (Item 2G). Precut the mesh, which is a woven fiberglass reinforcement fabric that is compatible with the plaster base coat and finish coat materials. Apply 1/16 to 1/8-inch thick plaster base coat to the exposed surface of the EPS foam. Apply the mesh; embed the mesh into the plaster base coat using a trowel. Start at the middle and work outwards towards edges. Established a final thickness of approximately 1/16-inches of the plaster base coat with the mesh embedded. Let the plaster base coat dry completely before applying the plaster finish coat, which is a plaster-based wall coating which may contain silica sand or marble aggregates. Apply the plaster finish coat using a trowel in the same manner as the plaster base coat.

3. **PERIMETER JOINT PROTECTION** – Maximum 8 inch nominal joint width (joint width at installation) of perimeter joint (linear opening). Perimeter joint protection incorporates the following construction features:

A. **Packing Material** – Use only materials bearing an Intertek Certified Product Label and meeting the following minimum requirements. Use a minimum 4 inch thick, 4 pcf density, mineral wool batt insulation installed to fill all openings with the fibers running parallel to the concrete slab (Item 1A) edge and curtain wall assembly (Item 2). Compress packing material 33% in the nominal joint width. Install top of packing material flush with the top surface of the concrete slab (Item 1A). Tightly compress together splices (butt joints) in the lengths of packing material, minimum compression 0.25-in. per piece. Notch packing material to receive support angle (Item 3C) so that packing material is in contact with barrier insulation (Item 2E).

B. **CERTIFIED MANUFACTURER:**
Grabber Construction Products
CERTIFIED PRODUCT: Sealant
MODEL: Grabbergard EFS
Fill, Void or Cavity Material – Apply sealant, (sprayed, brushed, or painted), to cover the top exposed surface of the packing material (Item 3A) compressed in the perimeter joint. Apply a minimum dry film thickness of 1/16 inch and overlap sealant a minimum 1 inch onto the adjacent curtain wall assembly (Item 2F1) and floor assembly (Item 1). After stopping the application process, and when the applied liquid cures to an elastomeric film before process is restarted, then overlap the edge of the cured sealant at least 1/8 inch with the new sealant being applied.

C. **Support Angle:** Horizontally install a minimum 20 GA 2 inch x 2 inch steel angle mechanically fastened to the interior of the steel-stud framing (Item 2B) at the mid point location of the packing material (Item 3A).

D. **Support Clips:** (Not Shown – Optional) Recommend use of support clips for when vertical movement required. Standard Z-shaped clips consist of 20 GA galvanized steel with the following dimensions: 1 inch wide by 3 inch high with a 2 inch upper leg and 3 inch lower leg.

Division 07-Thermal and Moisture Protection
07 84 00 Firestopping
07 84 43 Fire-Resistance Joint sealants

JWA/JS 120-19
CEJ 618 P
PERIMETER JOINT PROTECTION

CERTIFIED PRODUCT: Grabbergard EFS
ASTM E 2307-04
T-Rating – 1 hr.
F-Rating – 2 hr.
ASTM E 1966-01
CYCLING TYPE IV: ± 16.7% Horizontal Movement @ 33% Compression (Reference Item 3A)

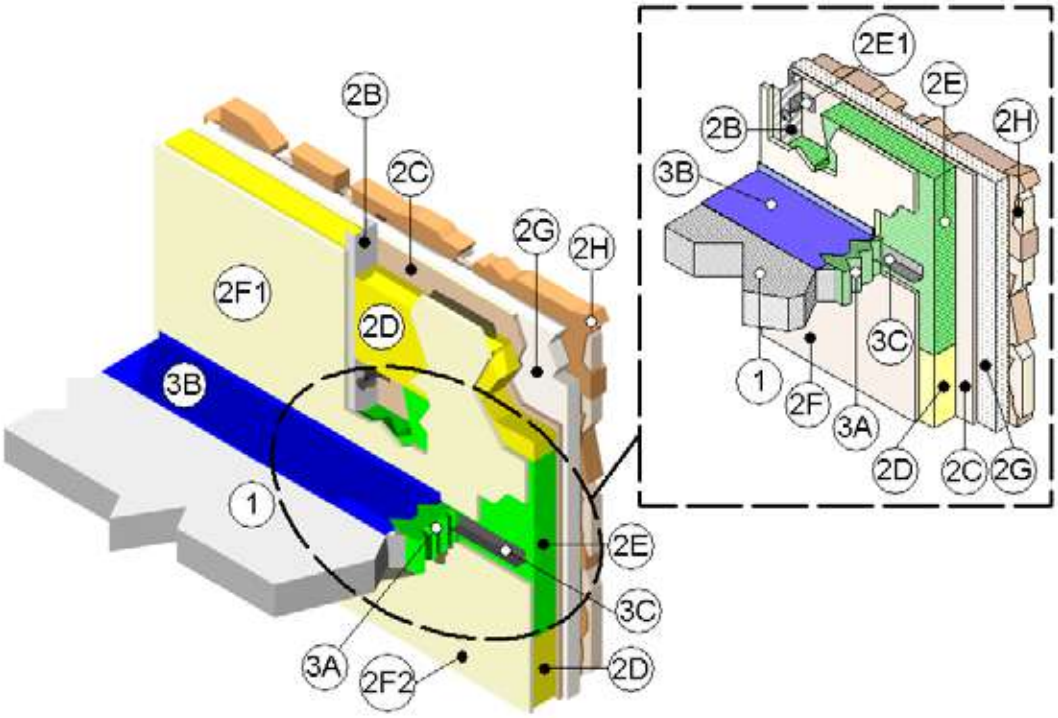

1. **FLOOR ASSEMBLY** – The floor assembly consists of the following construction features:
   - **A.** Two-hour rated reinforced concrete slab using either nominal density 100 pcf lightweight or nominal density 150 pcf normal weight concrete with a minimum thickness of 4-1/2-inches.
   - **B.** When required to accommodate the installation of an architectural joint system, increase overall concrete slab (Item 1A) thickness. Maintain minimum 4-1/2-inch thickness below blockout (longitudinal recesses) formed in the concrete slab (Item 1A) to accommodate the architectural joint system. Vary blockout width without restriction.
2. **CURTAIN WALL ASSEMBLY:** The curtain wall assembly incorporates the following construction features:
   - **A. Mounting Attachment:** (Not Shown) Attach curtain wall framing to the structural framing according to the curtain wall manufacturer's instructions. When required, connect the mounting attachments to the floor slab to the joint face of the floor slab, according to the curtain wall manufacturer's instructions. Maximum 10-foot distance between mounting attachments.

B. **Steel-Stud Framing:** Erect vertical framing members using a minimum 3-5/8 inch by 1-5/8 inch, 18 GA steel "C" studs. Erect vertical framing, and when required install horizontal framing members, according to the curtain wall system manufacturer's guidelines. Maximum 24 inch on center vertical framing spacing.

C. **Sandwiched Wall Surface:** Use a minimum 1/2-inch thick, 48-inch wide by 96 in. long, exterior grade gypsum wallboard (ASTM C 79), placed over and secured to framing with minimum 1-1/4 inch long Type S drywall screws spaced 8 inches on center.

D. **Curtain Wall Insulation:** Use only materials bearing an Intertek Certified Product Label and meeting the following minimum requirements. Install a nominal 24-inch wide by 48-inch tall by 4 inch thick faced or un-faced fiberglass insulation (batt) in each stud cavity in the steel stud framing (Item 2B). Completely fill the recess of the minimum 3-5/8 inch by 1-5/8 inch, 18 GA steel "C" studs with curtain wall insulation, except locations where the barrier insulation (Item 2E) in the steel stud framing (Item 2B) is installed.

E. **Barrier Insulation:** Use only materials bearing an Intertek Certified Product Label and meeting the following minimum requirements. Install a nominal 24-inch wide by 24-inch tall by 4 inch thick minimum 4 pcf un-faced mineral wool insulation (batt) in each stud cavity in the steel stud framing (Item 2B) at the floor assembly (Item 1) elevation so that nominal 12-inches of un-faced mineral wool insulation is above the surface of the perimeter joint protection (Item 3). Use a minimum un-faced mineral wool insulation (batt) length of 24-inches and fitted tightly between vertical framing members of the steel stud framing (Item 2B).

   i. Mechanically fasten the un-faced mineral wool insulation (batt) with minimum 2 x 2 inch, 20 GA steel clips with a minimum 5 inch copper coated steel pin extending from the center of the side of the clip installed parallel with the sandwiched wall surface (Item 2C). Locate the steel clips within each stud cavity in the steel stud framing (Item 2B). Locate one pin within 1-inch of each corner of each piece of un-faced mineral wool insulation (batt) and not less than 12-inch on center. The un-faced mineral wool insulation (batt) shall completely fill the recess of the min. 3-5/8 in. by 1-5/8 in., 18 GA steel "C" studs.

F. **Interior Curtain Wall Surface:** Install perimeter joint treatment (Item 3) before this material. Cover interior face of steel-stud framing (Item 2B) with one layer of minimum 1/2 inch thick, Type X gypsum board (ASTM C 36). The joint face of the curtain wall assembly (Item 2) is not covered as shown with the 1/2 inch thick, Type X gypsum board (ASTM C 36). Fasten 1/2 inch thick, Type X gypsum board (ASTM C 36) to steel-stud framing (Item 2B) with minimum #6 1-1/8 inches long bugle-head phillips drywall screws spaced 12 inches on center. Continuously place gypsum wallboard (2F1) a minimum 72 inches above surface of perimeter joint protection (Item 3). Optional gypsum wallboard (2F2) below the floor assembly (Item 1).

   i. **Joint Tape and Compound** – Apply vinyl or casein, dry or premixed joint compound to face layer of gypsum board (Item 2F) in two coats to all exposed screw heads and gypsum board steel-stud framing (Item 2B) butt joints. A minimum 2-inch wide paper, plastic or fiberglass tape embedded in first layer of compound over joints in gypsum board (Item 2F). Gypsum board installed below the slab is optional.

G. **Exterior Curtain Wall Insulation:** Create an Exterior Insulation Finish System (EIFS) composed of expanded polystyrene foam (EPS) insulation, and an Exterior Curtain Wall Finish (Item 2H). Use a monolithic assembly without expansion or control joints as the EIFS system. Use EPS foam boards measuring nominal 24 inches wide by 48 inches long by 4 inches thick with a nominal density of 1 pcf. Attach the EPS foam to the sandwiched wall surface (Item 2C) using mechanical fasteners or an adhesive in accordance with manufacturer's recommendations. Install the EPS boards in a running bond (brick-like) pattern and staggered over sandwiched wall surface (Item 2C) joints. Apply pressure to the EPS boards to assist in the bonding process. Butt all EPS boards together with no gaps or voids between them. Allow a minimum of 12 hours before continuing the application process when using adhesive. Rasp the EPS boards to remove all irregular seams and establish a continuous flat surface.

H. **Exterior Curtain Wall Finish:** Use a minimum 2-inch thick stone veneer applied in accordance with standard construction practices using a cement-based mortar.

Division 07-Thermal and Moisture Protection
07 84 00 Firestopping
07 84 43 Fire-Resistance Joint sealants

3. **PERIMETER JOINT PROTECTION** – Maximum 8 inch nominal joint width (joint width at installation) of perimeter joint (linear opening). Perimeter joint protection incorporates the following construction features:

   A. Packing Material – Use only materials bearing an Intertek Certified Product Label and meeting the following minimum requirements. Use a minimum 4 inch thick, 4 pcf density, mineral wool batt insulation installed to fill all openings with the fibers running parallel to the concrete slab (Item 1A) edge and curtain wall assembly (Item 2). Compress packing material 33% in the nominal joint width. Install top of packing material flush with the top surface of the concrete slab (Item 1A). Tightly compress together splices (butt joints) in the lengths of packing material, minimum compression 0.25-in. per piece. Notch packing material to receive support angle (Item 3C) so that packing material is in contact with barrier insulation (Item 2E).

   B. CERTIFIED MANUFACTURER:
   Grabber Construction Products
   CERTIFIED PRODUCT: Sealant
   MODEL: Grabbergard EFS
   Fill, Void or Cavity Material – Apply sealant, (sprayed, brushed, or painted), to cover the top exposed surface of the packing material (Item 3A) compressed in the perimeter joint. Apply a minimum dry film thickness of 1/16 inch and overlap sealant a minimum 1 inch onto the adjacent curtain wall assembly (Item 2F1) and floor assembly (Item 1). After stopping the application process, and when the applied liquid cures to an elastomeric film before process is restarted, then overlap the edge of the cured sealant at least 1/8 inch with the new sealant being applied.

   C. Support Angle: Horizontally install a minimum 20 GA 2 inch x 2 inch steel angle mechanically fastened to the interior of the steel-stud framing (Item 2B) at the mid point location of the packing material (Item 3A).

   D. Support Clips: (Not Shown – Optional) Recommend use of support clips for when vertical movement required. Standard Z-shaped clips consist of 20 GA galvanized steel with the following dimensions: 1 inch wide by 3 inch high with a 2 inch upper leg and 3 inch lower leg.

Division 07-Thermal and Moisture Protection
07 84 00 Firestopping
07 84 43 Fire-Resistance Joint sealants

JWA/JS 120-20
CEJ 619 P
PERIMETER JOINT PROTECTION

CERTIFIED PRODUCT: Grabbergard EFS
ASTM E 2307-04
T-Rating – 1 hr.
F-Rating – 2 hr.
ASTM E 1966-01
CYCLING TYPE IV: ± 16.7% Horizontal Movement @ 33% Compression (Reference Item 3A)

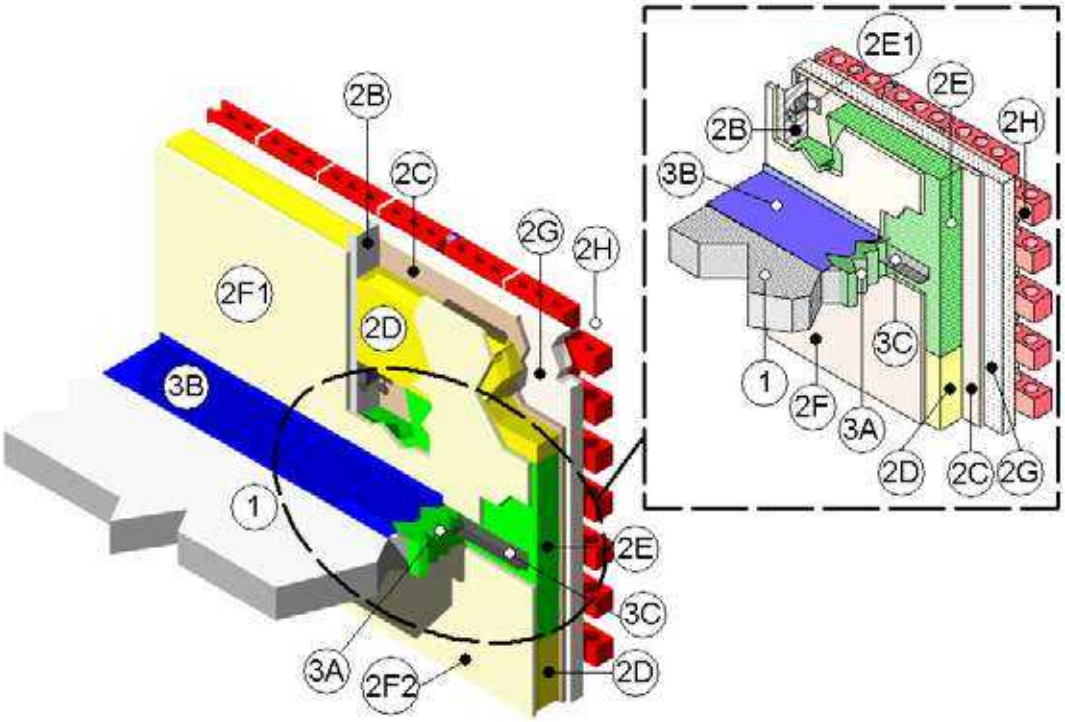

1. **FLOOR ASSEMBLY** – The floor assembly consists of the following construction features:
   - **A.** Two-hour rated reinforced concrete slab using either nominal density 100 pcf lightweight or nominal density 150 pcf normal weight concrete with a minimum thickness of 4-1/2-inches.
   - **B.** When required to accommodate the installation of an architectural joint system, increase overall concrete slab (Item 1A) thickness. Maintain minimum 4-1/2-inch thickness below blockout (longitudinal recesses) formed in the concrete slab (Item 1A) to accommodate the architectural joint system. Vary blockout width without restriction.
2. **CURTAIN WALL ASSEMBLY:** The curtain wall assembly incorporates the following construction features:
   - **A. Mounting Attachment:** (Not Shown) Attach curtain wall framing to the structural framing according to the curtain wall manufacturer's instructions. When required, connect the mounting attachments to the floor slab to the joint face of the floor slab, according to the curtain wall manufacturer's instructions. Maximum 10-foot distance between mounting attachments.

Division 07-Thermal and Moisture Protection
07 84 00 Firestopping
07 84 43 Fire-Resistance Joint sealants

B. Steel-Stud Framing: Erect vertical framing members using a minimum 3-5/8 inch by 1-5/8 inch, 18 GA steel "C" studs. Erect vertical framing, and when required install horizontal framing members, according to the curtain wall system manufacturer's guidelines. Maximum 24 inch on center vertical framing spacing.

C. Sandwiched Wall Surface: Use a minimum 1/2-inch thick, 48-inch wide by 96 in. long, exterior grade gypsum wallboard (ASTM C 79), placed over and secured to framing with minimum 1-1/4 inch long Type S drywall screws spaced 8 inches on center.

D.Curtain Wall Insulation: Use only materials bearing an Intertek Certified Product Label and meeting the following minimum requirements. Install a nominal 24-inch wide by 48-inch tall by 4 inch thick faced or un-faced fiberglass insulation (batt) in each stud cavity in the steel stud framing (Item 2B). Completely fill the recess of the minimum 3-5/8 inch by 1-5/8 inch, 18 GA steel "C" studs with curtain wall insulation, except locations where the barrier insulation (Item 2E) in the steel stud framing (Item 2B) is installed.

E. Barrier Insulation: Use only materials bearing an Intertek Certified Product Label and meeting the following minimum requirements. Install a nominal 24-inch wide by 24-inch tall by 4 inch thick minimum 4 pcf un-faced mineral wool insulation (batt) in each stud cavity in the steel stud framing (Item 2B) at the floor assembly (Item 1) elevation so that nominal 12-inches of un-faced mineral wool insulation is above the surface of the perimeter joint protection (Item 3). Use a minimum un-faced mineral wool insulation (batt) length of 24-inches and fitted tightly between vertical framing members of the steel stud framing (Item 2B).

i. Mechanically fasten the un-faced mineral wool insulation (batt) with minimum 2 x 2 inch, 20 GA steel clips with a minimum 5 inch copper coated steel pin extending from the center of the side of the clip installed parallel with the sandwiched wall surface (Item 2C). Locate the steel clips within each stud cavity in the steel stud framing (Item 2B). Locate one pin within 1-inch of each corner of each piece of un-faced mineral wool insulation (batt) and not less than 12-inch on center. The un-faced mineral wool insulation (batt) shall completely fill the recess of the min. 3-5/8 in. by 1-5/8 in., 18 GA steel "C" studs.

F. Interior Curtain Wall Surface: Install perimeter joint treatment (Item 3) before this material. Cover interior face of steel-stud framing (Item 2B) with one layer of minimum 1/2 inch thick, Type X gypsum board (ASTM C 36). The joint face of the curtain wall assembly (Item 2) is not covered as shown with the 1/2 inch thick, Type X gypsum board (ASTM C 36). Fasten 1/2 inch thick, Type X gypsum board (ASTM C 36) to steel-stud framing (Item 2B) with minimum #6 1-1/8 inches long bugle-head phillips drywall screws spaced 12 inches on center. Continuously place gypsum wallboard (2F1) a minimum 72 inches above surface of perimeter joint protection (Item 3). Optional gypsum wallboard (2F2) below the floor assembly (Item 1).

i. **Joint Tape and Compound** – Apply vinyl or casein, dry or premixed joint compound to face layer of gypsum board (Item 2F) in two coats to all exposed screw heads and gypsum board steel-stud framing (Item 2B) butt joints. A minimum 2-inch wide paper, plastic or fiberglass tape embedded in first layer of compound over joints in gypsum board (Item 2F). Gypsum board installed below the slab is optional.

G. Exterior Curtain Wall Insulation: Create an Exterior Insulation Finish System (EIFS) composed of expanded polystyrene foam (EPS) insulation, and an Exterior Curtain Wall Finish (Item 2H). Use a monolithic assembly without expansion or control joints as the EIFS system. Use EPS foam boards measuring nominal 24 inches wide by 48 inches long by 4 inches thick with a nominal density of 1 pcf. Attach the EPS foam to the sandwiched wall surface (Item 2C) using mechanical fasteners or an adhesive in accordance with manufacturer's recommendations. Install the EPS boards in a running bond (brick-like) pattern and staggered over sandwiched wall surface (Item 2C) joints. Apply pressure to the EPS boards to assist in the bonding process. Butt all EPS boards together with no gaps or voids between them. Allow a minimum of 12 hours before continuing the application process when using adhesive. Rasp the EPS boards to remove all irregular seams and establish a continuous flat surface.

H. Exterior Curtain Wall Finish: Use brick and mortar of any type. Mortar joints not to exceed 7/8-inches. Secure bricks to curtain wall assembly (Item 2) using conventional acceptable masonry techniques.

Division 07-Thermal and Moisture Protection
07 84 00 Firestopping
07 84 43 Fire-Resistance Joint sealants

3. **PERIMETER JOINT PROTECTION** – Maximum 8 inch nominal joint width (joint width at installation) of perimeter joint (linear opening). Perimeter joint protection incorporates the following construction features:

   A. Packing Material – Use only materials bearing an Intertek Certified Product Label and meeting the following minimum requirements. Use a minimum 4 inch thick, 4 pcf density, mineral wool batt insulation installed to fill all openings with the fibers running parallel to the concrete slab (Item 1A) edge and curtain wall assembly (Item 2). Compress packing material 33% in the nominal joint width. Install top of packing material flush with the top surface of the concrete slab (Item 1A). Tightly compress together splices (butt joints) in the lengths of packing material, minimum compression 0.25-in. per piece. Notch packing material to receive support angle (Item 3C) so that packing material is in contact with barrier insulation (Item 2E).

   B. CERTIFIED MANUFACTURER:
   Grabber Construction Products
   CERTIFIED PRODUCT: Sealant
   MODEL: Grabbergard EFS
   Fill, Void or Cavity Material – Apply sealant, (sprayed, brushed, or painted), to cover the top exposed surface of the packing material (Item 3A) compressed in the perimeter joint. Apply a minimum dry film thickness of 1/16 inch and overlap sealant a minimum 1 inch onto the adjacent curtain wall assembly (Item 2F1) and floor assembly (Item 1). After stopping the application process, and when the applied liquid cures to an elastomeric film before process is restarted, then overlap the edge of the cured sealant at least 1/8 inch with the new sealant being applied.

   C. Support Angle: Horizontally install a minimum 20 GA 2 inch x 2 inch steel angle mechanically fastened to the interior of the steel-stud framing (Item 2B) at the mid point location of the packing material (Item 3A).

   D. Support Clips: (Not Shown – Optional) Recommend use of support clips for when vertical movement required. Standard Z-shaped clips consist of 20 GA galvanized steel with the following dimensions: 1 inch wide by 3 inch high with a 2 inch upper leg and 3 inch lower leg.

Division 07-Thermal and Moisture Protection
07 84 00 Firestopping
07 84 43 Fire-Resistance Joint sealants

JWA/JS 120-21
CEJ 620 P
PERIMETER JOINT PROTECTION

CERTIFIED PRODUCT: Grabbergard EFS
ASTM E 2307-04
T-Rating – 1 hr.
F-Rating – 2 hr.
ASTM E 1966-01
CYCLING TYPE IV: ± 16.7% Horizontal Movement @ 33% Compression (Reference Item 3A)

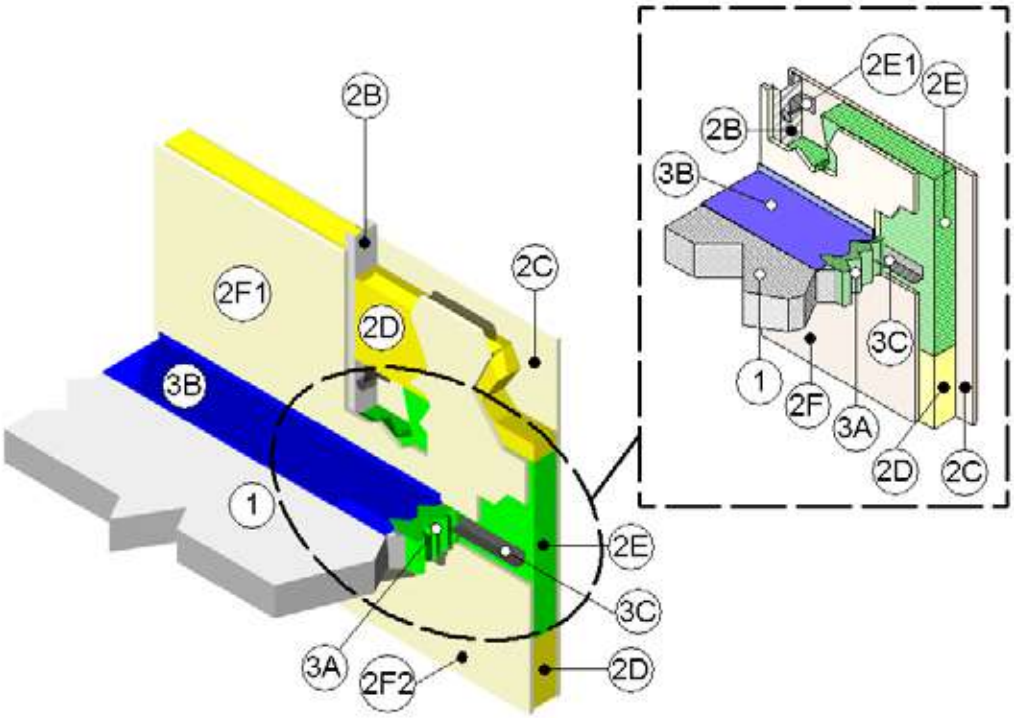

1. **FLOOR ASSEMBLY** – The floor assembly consists of the following construction features:
   - **A.** Two-hour rated reinforced concrete slab using either nominal density 100 pcf lightweight or nominal density 150 pcf normal weight concrete with a minimum thickness of 4-1/2-inches.
   - **B.** When required to accommodate the installation of an architectural joint system, increase overall concrete slab (Item 1A) thickness. Maintain minimum 4-1/2-inch thickness below blockout (longitudinal recesses) formed in the concrete slab (Item 1A) to accommodate the architectural joint system. Vary blockout width without restriction.
2. **CURTAIN WALL ASSEMBLY:** The curtain wall assembly incorporates the following construction features:
   - A. Mounting Attachment: (Not Shown) Attach curtain wall framing to the structural framing according to the curtain wall manufacturer's instructions. When required, connect the mounting attachments to the floor slab to the joint face of the floor slab, according to the curtain wall manufacturer's instructions. Maximum 10-foot distance between mounting attachments.

B. **Steel-Stud Framing:** Erect vertical framing members using a minimum 3-5/8 inch by 1-5/8 inch, 18 GA steel "C" studs. Erect vertical framing, and when required install horizontal framing members, according to the curtain wall system manufacturer's guidelines. Maximum 24 inch on center vertical framing spacing.

C. **Exterior Wall Surface:** Use a minimum 1/2-inch thick, 48-inch wide by 96 in. long, exterior grade gypsum wallboard (ASTM C 79), placed over and secured to framing with minimum 1-1/4 inch long Type S drywall screws spaced 8 inches on center.

D. **Curtain Wall Insulation:** Use only materials bearing an Intertek Certified Product Label and meeting the following minimum requirements. Install a nominal 24-inch wide by 48-inch tall by 4 inch thick faced or un-faced fiberglass insulation (batt) in each stud cavity in the steel stud framing (Item 2B). Completely fill the recess of the minimum 3-5/8 inch by 1-5/8 inch, 18 GA steel "C" studs with curtain wall insulation, except locations where the barrier insulation (Item 2E) in the steel stud framing (Item 2B) is installed.

E. **Barrier Insulation:** Use only materials bearing an Intertek Certified Product Label and meeting the following minimum requirements. Install a nominal 24-inch wide by 24-inch tall by 4 inch thick minimum 4 pcf un-faced mineral wool insulation (batt) in each stud cavity in the steel stud framing (Item 2B) at the floor assembly (Item 1) elevation so that nominal 12-inches of un-faced mineral wool insulation is above the surface of the perimeter joint protection (Item 3). Use a minimum un-faced mineral wool insulation (batt) length of 24-inches and fitted tightly between vertical framing members of the steel stud framing (Item 2B).

i. Mechanically fasten the un-faced mineral wool insulation (batt) with minimum 2 x 2 inch, 20 GA steel clips with a minimum 5 inch copper coated steel pin extending from the center of the side of the clip installed parallel with the sandwiched wall surface (Item 2C). Locate the steel clips within each stud cavity in the steel stud framing (Item 2B). Locate one pin within 1-inch of each corner of each piece of un-faced mineral wool insulation (batt) and not less than 12-inch on center. The un-faced mineral wool insulation (batt) shall completely fill the recess of the min. 3-5/8 in. by 1-5/8 in., 18 GA steel "C" studs.

F. **Interior Curtain Wall Surface:** Install perimeter joint treatment (Item 3) before this material. Cover interior face of steel-stud framing (Item 2B) with one layer of minimum 1/2 inch thick, Type X gypsum board (ASTM C 36). The joint face of the curtain wall assembly (Item 2) is not covered as shown with the 1/2 inch thick, Type X gypsum board (ASTM C 36). Fasten 1/2 inch thick, Type X gypsum board (ASTM C 36) to steel-stud framing (Item 2B) with minimum #6 1-1/8 inches long bugle-head phillips drywall screws spaced 12 inches on center. Continuously place gypsum wallboard (2F1) a minimum 72 inches above surface of perimeter joint protection (Item 3). Optional gypsum wallboard (2F2) below the floor assembly (Item 1).

i. **Joint Tape and Compound** – Apply vinyl or casein, dry or premixed joint compound to face layer of gypsum board (Item 2F) in two coats to all exposed screw heads and gypsum board steel-stud framing (Item 2B) butt joints. A minimum 2-inch wide paper, plastic or fiberglass tape embedded in first layer of compound over joints in gypsum board (Item 2F). Gypsum board installed below the slab is optional.

3. **PERIMETER JOINT PROTECTION** – Maximum 8 inch nominal joint width (joint width at installation) of perimeter joint (linear opening). Perimeter joint protection incorporates the following construction features:

A. **Packing Material** – Use only materials bearing an Intertek Certified Product Label and meeting the following minimum requirements. Use a minimum 4 inch thick, 4 pcf density, mineral wool batt insulation installed to fill all openings with the fibers running parallel to the concrete slab (Item 1A) edge and curtain wall assembly (Item 2). Compress packing material 33% in the nominal joint width. Install top of packing material flush with the top surface of the concrete slab (Item 1A). Tightly compress together splices (butt joints) in the lengths of packing material, minimum compression 0.25-in. per piece. Notch packing material to receive support angle (Item 3C) so that packing material is in contact with barrier insulation (Item 2E).

Division 07-Thermal and Moisture Protection
07 84 00 Firestopping
07 84 43 Fire-Resistance Joint sealants

B. CERTIFIED MANUFACTURER:
Grabber Construction Products
CERTIFIED PRODUCT: Sealant
MODEL: Grabbergard EFS
Fill, Void or Cavity Material – Apply sealant, (sprayed, brushed, or painted), to cover the top exposed surface of the packing material (Item 3A) compressed in the perimeter joint. Apply a minimum dry film thickness of 1/16 inch and overlap sealant a minimum 1 inch onto the adjacent curtain wall assembly (Item 2F1) and floor assembly (Item 1). After stopping the application process, and when the applied liquid cures to an elastomeric film before process is restarted, then overlap the edge of the cured sealant at least 1/8 inch with the new sealant being applied.

C. **Support Angle:** Horizontally install a minimum 20 GA 2 inch x 2 inch steel angle mechanically fastened to the interior of the steel-stud framing (Item 2B) at the mid point location of the packing material (Item 3A).

D. **Support Clips:** (Not Shown – Optional) Recommend use of support clips for when vertical movement required. Standard Z-shaped clips consist of 20 GA galvanized steel with the following dimensions: 1 inch wide by 3 inch high with a 2 inch upper leg and 3 inch lower leg.

Equipment and Caulking Installations Instructions Using Caulking Applicator Guns

There are different types of caulking applicator guns available. The recommended procedure when using the different styles will be described in Sections A and B. Section C will then describe the recommended procedures to follow to install the caulk and finish the job.

Section A – Applying Caulk in Plastic and Cardboard Fiber Foil Wrapped Cartridges

There are variety of applicator caulking guns available to do firestopping. We recommend using a smooth rod style rather than the less expensive ratchet rod type. When dispensing caulk from a 29 ounce-size cartridge, we recommend a rod type gun with at least a 12:1 thrust ratio. The higher thrust ratio means less hand fatigue since firestopping caulks are usually high viscous caulkings. The higher thrust ratio will also help when the product becomes stiffer in the colder temperatures. (12:1 ration generates approximately 300 pound thrust)

For manual single component cartridge applicator guns.

Select the correct size manual drive frame-style cartridge gun for either the 10-ounce (300ml) or the larger 29-ounce (850ml) plastic or cardboard fiber foil wrapped tube type

Using a utility knife cut off the end of the plastic tip/nozzle to the desired opening size. The cut can be either straight across (90°) or angled (45°). Cutting too small of an opening will restrict the flow of material and a smaller bead size will result. The smaller the opening the higher the trigger action (pressure) required to move the material out of the tube.

On the 29 fl. oz. tubes, insert either a screwdriver or other pointed utensil into the plastic nozzle to puncture the membrane; which will allow the caulk material to flow.

Caulking Instructions - GrabberGard EFC & IFC

Pull back the push rod of the frame-style caulking gun to its full extension.

Drop the cartridge into the frame insuring that the plastic nozzle of the cartridge is place through the opening in the end plate.

Repeatedly pull the trigger of the applicator guns until the push rod is advanced to the end of the cartridge. The caulk will begin to flow when some resistance is felt.

When the desired amount of material has been advanced, stop triggering; release the pressure by pressing the lever (tab) located at the back of the handle with your thumb. This causes the push rod to slip back stopping the flow of material.

REFER TO SECTION C TO COMPLETE THE INSTALLATION PROCEDURE.

Caulking Instructions - GrabberGard EFC & IFC

Section B- Applying Caulk with Refillable Bulk Loading Applicator Gun

The caulking to be used is shipped in 5-gallon (18.9 liter) plastic tapered pails.

Advance the plunger and push the rod down to the end of the barrel.

To begin the loading process, remove the front cap containing the nozzle.

With a utility knife, cut an opening in the plastic nozzle (cut can be straight across (90°) or angled (45°)).

Coat the threads at the end of the barrel with a solvent (oil) or water to prevent the accumulation of material.

Immerse the open end of the barrel into the material to a depth of approximately 1-inch.

Move the immersed gun slightly around so the material will adhere and form an air seal.

Caulking Instructions - GrabberGard EFC & IFC

Hold the barrel steady, grip the T-pull and slowly pull the push rod back drawing the material into the barrel. Pulling the rod back to quickly may result in air pockets and an incomplete fill.

Remove the gun from the pail of material and scrape off the excess amount that has accumulated on the barrel.

Replace the front cap and nozzle.

To stop the flow or product, stop triggering and depress the pressure and release tab on the handle.

Now you are ready to install the material into the openings and joints.

REFER TO SECTION C TO COMPLETE THE INSTALLATION PROCEDURE.

Section C – Installing Firestop Caulk

General Information

All firestopping installations must be performed in compliance with a tested and listed firestop system design. The testing laboratories like Underwriters Laboratories (UL) or Intertek (Warnock Hersey) publish these listings.

For the appropriate listing, consult the manufacturer's literature or the testing laboratories Fire Protection Directories and/or their web sites.

The manufacturer recommends an individual who has been properly trained in the correct procedures should perform all firestop installations. The individual must be able to read and understand a tested firestop listing design.

The applicator should have the following materials and equipment to correctly and safely install firestop caulking.

- Safety Glasses
- Gloves
- Utility (box) knife
- Stainless Steel Spatula
- Cleaning rags
- Plastic spray water bottle (quart/liter) with finger pump trigger/nozzle

Areas to be firestopped should be clean, free from: water, excessive dirt, dust, debris and grease. For the best results, the ideal atmospheric temperatures and environment would be:

- Dry, 60°-75°F (15°C -24°C) & R.H. 50 %.

Caulking Instructions - GrabberGard EFC & IFC

When the damming or fire insulation material is required, the following information should be considered before commencing.

- Backer rod used as a damming or support material should be installed into the opening in a thickness and compressed sufficiently as to not dislodge and fall out under normal building movement. Wrap the backer rod completely around the penetration(s) and recess it to accommodate the required amount of firestop caulk.
- Mineral wool when required, as an insulation material, it should be installed into the opening compressed to a thickness as to not dislodge nor fall out under normal building movement. The mineral wool, usually 4 pcf, should be installed to the compression required by the firestop listing. The orientation of the mineral wool is also very important and maybe the difference of the system being in compliance or not. For construction joints or through penetration in floor (horizontal) rated assemblies, the mineral wool or similar fibrous material should be installed with the lamination in a vertical orientation assemblies. The opposite is the rule of joints and through penetrations in wall (vertical) assemblies. Here the laminations should be placed in a horizontal orientation. Installing the mineral wool in these different lamination directions allows the material to be compressed to the density required for the fire rating and building movement.
- **Do not install mineral wool that is or has become wet i.e. exposure to water, rain, or snow.**

Water base caulks adhere to some construction materials better than others. Applying a light mist of water to these surfaces can in some instances, help the bonding process. Mineral wool, is one of these materials, especially when it is in a vertical orientatation.

Tooling the installed material can be done in several ways:

- **Dry tooling**: After the material is put in place, using a spatula or other tool that has not been wetted with water, smooth it out.
- **Wet tooling:** After the material has been put in place, using a spatula or other tool that has been wetted with water, smooth it out.
- **Wet tooling:** After the material has been installed, lightly mist the material with water. Use a plastic water spray bottle, turn the nozzle to a mist spray orifice, hold the bottle approximately 10-12 inches (255-305mm) from the area. **DO NOT APPLY WATER TO THE MATERIAL IN A CONCENTRATED JET SPRAY.** This will apply too much water, causing the material to dilute and run out.

Caulking Penetrations

Install the correct amount of caulk material into the opening (annular space) around the service penetration to the depth/thickness required. Make sure that caulking is in intimate contact with the substrate and the penetrating item. Once the caulk is in place, tool the material with a tooling utensil (spatula) to a smooth finish. This will push the installed material into areas not covered in the initial caulking procedure. It will also help to ensure a better bond with mating construction materials.

Caulking Construction Joints

Some construction joints do not require damming material or mineral wool to be used to affect a firestop system. When filler caulk material is the only component required, the installation must be installed in accordance with the listing being used. This usually requires the filler material to be installed into the gap/joint. Once the caulking has been trowelled or gunned in place, the installed material should be tooled into a smooth finish. Work the material to ensure no voids and air holes are left. This is particularly important when caulking to fireproofing materials. Cured fireproofing is very porous and the caulking must be tooled to it to ensure a tight seal and a secure mating surface system, refer to the procedures described above for the proper installation before applying the filler caulking material.

Note: All installation procedures of firestop caulk materials outlined in the proceeding information are water-based compounds.

Spray Instructions - GrabberGard EFS

Firestopping Construction Joints Grabbergard EFS

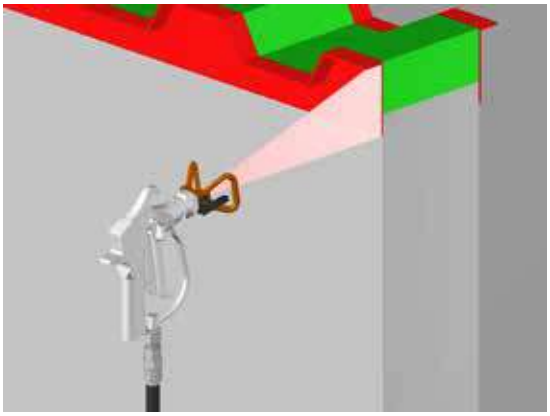

Determine the installation requirements. Select the appropriate firestop listing for the application

The installation of the safing material is crucial to the joint firestop system. If the mineral wool safing material is poorly installed several undesirable consequences could happen: (1) normal building movement may cause the firestop materials to fall out; (2) if loosely packed and safing is hit with the pressure from the spray gun, the material may blow out of the joint; (3) loosely packed mineral wool will require more firestop spray material to be applied (the wool fiber will open up and create more voids to be filled with the coating).

Surface preparation: To ensure an effective firestop system, remove excessive dust, dirt, debris, frost, water and oils. Remove any rust from supporting members.

Safing Insulation: Use minimum 4pcf mineral wool fiber (some systems may require 6 or 8 pcf)

- For horizontal joints in wall assemblies: Select the appropriate nominal thickness for the joint; cut the mineral wool safing material to fit tightly into the joint and compress it to the density (usually 25% compression) required by the listing. The mineral wool should be installed with the laminations (layers) being in a horizontal orientation (this will allow the wool to compress easier and not break apart).
- Vertical joints in wall assemblies: Install as outlined above, except for floor joints the safing laminations (layers) should be installed in a vertical orientation. This allows for maximum compression of the safing material.
- Floor to floor and floor to wall joints: Install as outlined above, except for the floor joints the safing material should be installed with the laminations (layers) in a vertical orientation. Larger floor joints may require impaling clips or pins, which help support the mineral wool (manufacturer recommends using clips or pins in joints 4 inches and larger).

Operating Electrical Spray Equipment

For optimum equipment operating and cleaning information, consult the spray pump manufacturer's Owner's Manual or their local distributor/representative.

Spraying Elastomeric Firestop Techniques

- An important factor when spray-applying Grabbergard EFS is to achieve an even coating over the entire surface being covered.
- Use even strokes to get the best results.
- As much as possible, keep you arm moving at a constant speed.
- Keep the spray gun at a constant distance from the surface. A good distance is 10-12 inches (25-30cm) between the spray tip and the surface.
- Grabbergard EFS can be applied in a single pass up to 80 mil (5/64") wet thickness.
- Overlap the interfacing surfaces with the correct amount of material [usually 1 inch (25cm)]
- If the coating starts to run when applied to vertical assemblies, more than one thin coat may be necessary. Begin the process by first applying a thin tack coating. After a short time apply the desired coating thickness.

Spray Instructions - GrabberGard EFS

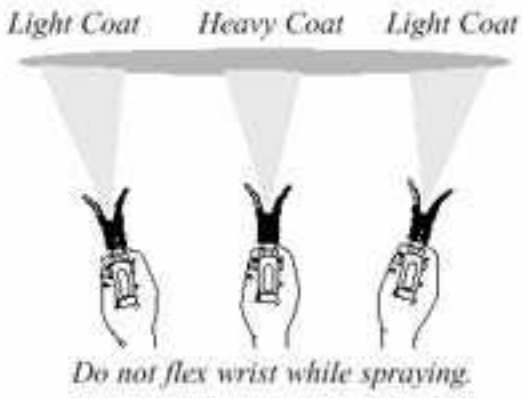

Keep the gun at right angles on the surface. This means moving your entire arm back and forth rather than flexing the wrist.

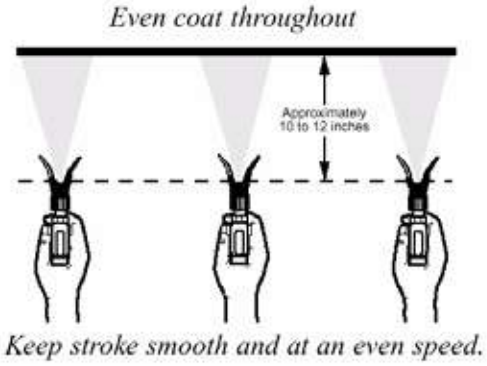

Keep the spray gun perpendicular to the surface.

The spray gun should be triggered by turning it on and off with an even stroke.

Proper way to trigger the spray gun

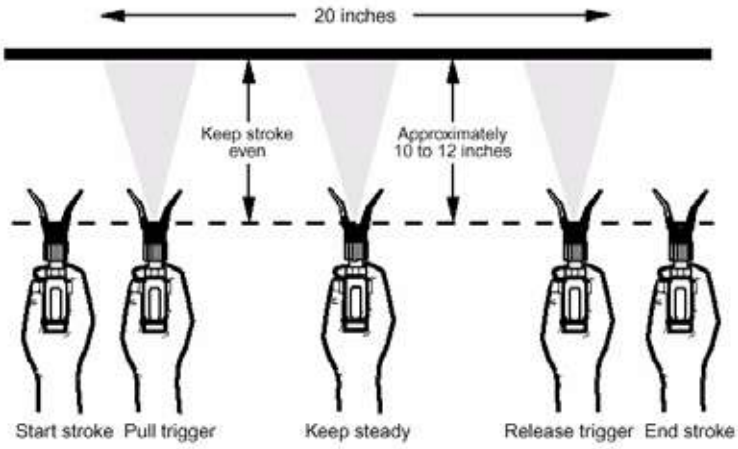

Overlap each stroke by approximately 30%. This will ensure an even coating.

Spray Instructions - GrabberGard EFS

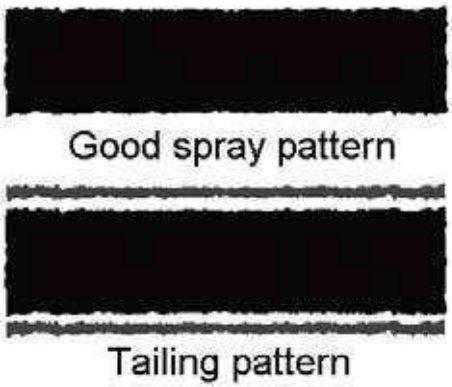

Not Acceptable Spray Pattern

Spray Equipment

Apply Grabbergard EFS using airless spray equipment. Recommended specifications:

Heavy to Moderate Duty

Electric motor	1.50 hp
Maximum Working Pressure	3000 psi
Flow Output	1.25 gpm
20 Amp Mode Cord	Min. 12 gauge (recommend 10 gauge)
Hose size	3/8" (9.5mm)
Hose length	Max. 100 ft.
Spray Gun	Mastic Gun
Spray Tips	Reversible 0.019 to 0.031 (recommend 0.021)
Fan width	2" – 12" (50mm-300m)

***Note:** Remove the filter element and filter support attempting to spray. The screen in some applications could be removed.

Moderate to Heavy Duty

Electric Motor	1.50 hp
Maximum Working Pressure	3000 psi
Flow Output	0.67 gpm
20 Amp Mode Cord	12 gauge
Hose Size	¼" or 3/8 " (6 or 9.5mm)
Hose Length	Max. 100ft. (30.5)
Spray Gun	Mastic Gun
Spray Tips	Reversible 0.019 to 0.025 (recommend 0.021)
Fan Width	2" – 12" (50-300mm)

***Note:** Remove the filter element and filter support before spraying. The screen (rock) filter could also be removed.

Spray Instructions - GrabberGard EFS

Light to Moderate Duty

Electric Motor	1.1 hp
Maximum Working Pressure	3000 psi
Flow Output	0.55 gpm
Amp Mode Cord	12 gauge
Hose Size	¼" (6mm)
Hose Length	Max. 100 ft. (30.5)
Spray Gun	Mastic Gun
Spray Tips	Reversible 0.019 – 0.023
Fan Width	2" – 12" (50-300mm)

***Note:** Remove the element filter and filter support before spraying.

CORRUGATED METAL DECK - MASTIC SPRAY

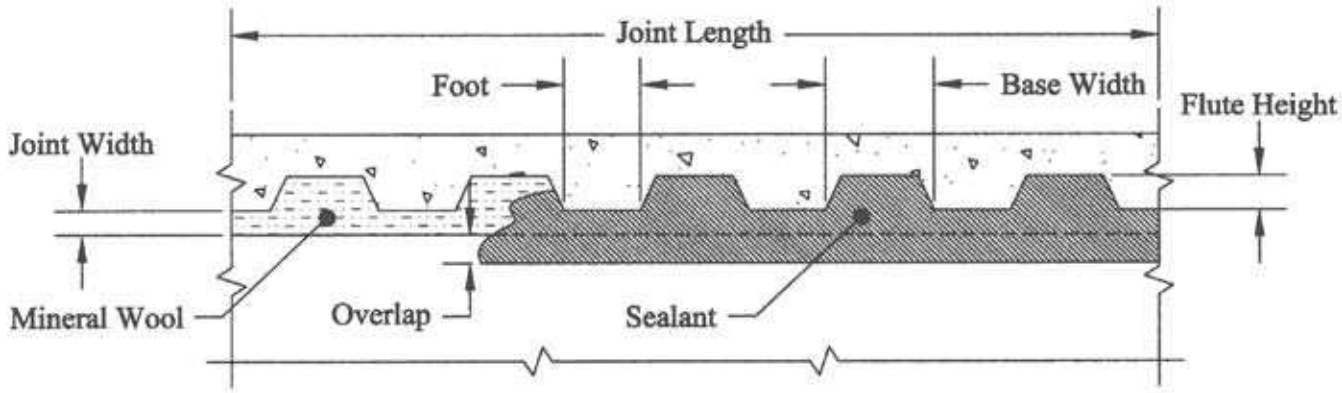

GrabberGard EFS

Sprayable mastic for top of gypsum wallboard wall assemblies cut straight across or concrete wall assemblies to fluted metal decks.
Quantity calculations include:

- Both sides of the wall assembly
- Variable flute heights (see chart)
- 3/4 in. construction gap
- 1 in. overlap (1 in. sprayed on deck and 1 in. on the wall assembly)
- 1/16 in. thickness of spray material
- 10% wastage factor

100 LINEAL FEET OF DECKING FLUTE SIZE (inches)			GrabberGard EFS QUANTITY REQUIRED	
Height	**Base Width**	**Foot**	**US gallons**	**Liters**
1.5	4.3	1.7	3.09	11.69
3	3.9	2.2	4.04	15.28
3	5.9	2.2	4.05	15.35

Available sizes:

Container Size:	Volume:
5 gallon pail (18.9L)	1155 cu. in.

CORRUGATED METAL DECK - CAULKING CALCULATION GUIDE

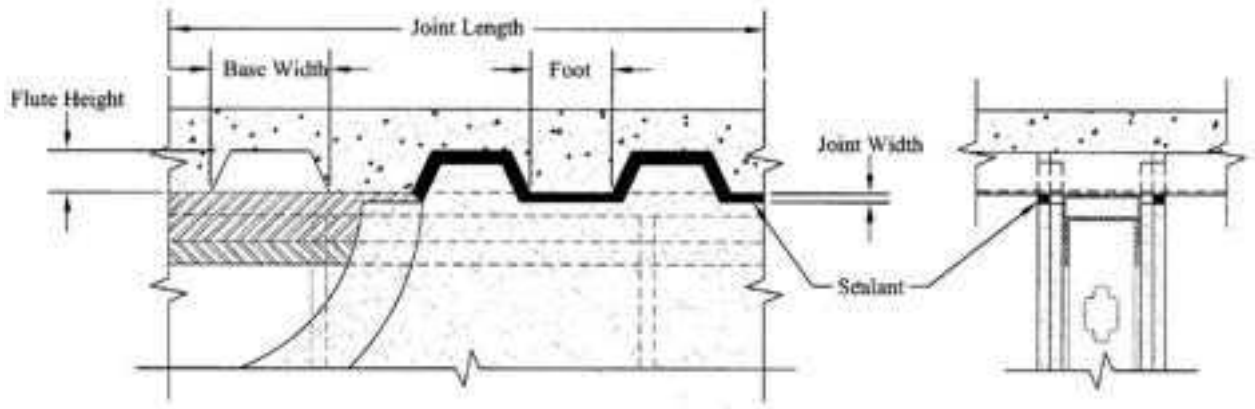

GrabberGard EFC or IFC sealant top of gypsum wallboard wall assemblies cut to the profile of metal decking. Quantity calculations are for both sides of the wall assembly.

100 LINEAL FEET OF DECKING FLUTE SIZE (inches)			GAP SIZE	SEALANT DEPTH	CAULK QUANTITY REQUIRED	
Height	**Base Width**	**Foot**	**Inches**	**Inches**	**US gallons**	**Liters**
1.5	4.3	1.7	0.50	0.625	4.87	18.43
1.5	4.3	1.7	0.75	0.625	7.31	27.65
1.5	4.3	1.7	1.00	0.625	9.74	36.87
1.5	4.3	1.7	0.50	1.250	9.74	36.87
1.5	4.3	1.7	0.75	1.250	14.61	55.31
1.5	4.3	1.7	1.00	1.250	19.48	73.74
3.0	3.9	2.2	0.50	0.625	6.44	24.38
3.0	3.9	2.2	0.75	0.625	9.66	36.57
3.0	3.9	2.2	1.00	0.625	12.88	48.76
3.0	3.9	2.2	0.50	1.250	12.88	48.76
3.0	3.9	2.2	0.75	1.250	19.32	73.14
3.0	3.9	2.2	1.00	1.250	25.76	97.52
3.0	5.9	2.2	0.50	0.625	5.65	21.39
3.0	5.9	2.2	0.75	0.625	8.48	32.09
3.0	5.9	2.2	1.00	0.625	11.30	42.79
3.0	5.9	2.2	0.50	1.250	11.30	42.79
3.0	5.9	2.2	0.75	1.250	16.96	64.18
3.0	5.9	2.2	1.00	1.250	22.61	85.58

Available sizes:

Container Size:	Volume:
10.1fl.oz tube (300ml)	18 cu. in.
20 fl.oz foil pack (600ml)	36 cu. in.
29 fl.oz tube (850ml)	51 cu. in.
5 gallon pail (18.9L)	**1155 cu. in.**

THROUGH PENETRATIONS CALCULATION GUIDE

Step 1:
For sealant depth of 1 in.
Use this chart to calculate the volume (cu. in.) of Grabber sealant required for each penetration.

Diameter of Hole	Nominal Diameter of Penetrating Items (inches)												
	0.50	0.75	1.00	1.50	2.00	2.50	3.00	3.50	4.00	6.00	8.00	10.00	12.00
	Actual Outside Diameter of Sch 40 Penetrating Items (inches)												
(inches)	O.840	1.050	1.315	1.900	2.375	2.875	3.500	4.000	4.500	6.625	8.625	10.75	12.75
1.00	0.23												
1.50	1.21	0.90	0.41										
2.00	2.59	2.28	1.78	0.31									
2.50	4.35	4.04	3.55	2.07	0.48								
3.00	6.51	6.20	5.71	4.23	2.64	0.58							
3.50	9.07	8.76	8.26	6.79	5.19	3.13							
4.00	12.01	11.70	11.21	9.73	8.14	6.07	2.95						
4.50	15.35	15.04	14.55	13.07	11.47	9.41	6.28	3.34					
5.00	19.08	18.77	18.28	16.80	15.20	13.14	10.01	7.07	3.73				
5.50	23.20	22.89	22.40	20.92	19.33	17.27	14.14	11.19	7.85				
6.00	27.72	27.41	26.92	25.44	23.84	21.78	18.65	15.71	12.37				
6.50	32.63	32.32	31.82	30.35	28.75	26.69	23.56	20.62	17.28				
7.00	37.93	37.62	37.13	35.65	34.05	31.99	28.86	25.92	22.58	4.01			
7.50	43.62	43.31	42.82	41.34	39.75	37.69	34.56	31.61	28.27	9.71			
8.00	49.71	49.40	48.91	47.43	45.84	43.77	40.64	37.70	34.36	15.79			
8.50	56.19	55.88	55.39	53.91	52.31	50.25	47.12	44.18	40.84	22.27			
10.00	77.99	77.67	77.18	75.70	74.11	72.05	68.92	65.97	62.64	44.07	20.11		
12.00	112.54	112.23	111.74	110.26	108.67	106.61	103.48	100.53	97.19	78.63	54.67	22.33	
14.00	153.38	153.07	152.58	151.10	149.51	147.45	144.32	141.37	138.03	119.47	95.51	63.18	26.26

Note: These calculations are for a sealant depth of 1in. only.
For a different sealant depth, go to Step 2.
To calculate number of containers required, go to Step 3.

Step 2:

For a depth of:	Multiply by:
1/8"	0.13
1/4"	0.25
1/2"	0.50
3/4"	0.75
2"	2.00
3"	3.00
4"	4.00

Step 3:

Container Size:	Volume:
10.1fl.oz tube (300ml)	18 cu. in.
20 fl.oz foil pack (600ml)	36 cu. in.
29 fl.oz tube (850ml)	51 cu. in.
1 gallon pail (3.8L)	231 cu. in.
3 gallon pail (11.4L)	693 cu. in.
5 gallon pail (18.9L)	1155 cu. in.

CONSTRUCTION JOINTS CALCULATION GUIDE

Use this chart to calculate:
The lineal feet of coverage per US gallon (3.8L) of Grabber Sealant
For GrabberGard EFS use the next larger joint width to allow for 1/2 in. (12.5mm) overlap on both sides of gap.

JOINT WIDTH			DEPTH OF SEALANT							
MM	INCHES		0.125	0.250	0.375	0.500	0.625	0.750	0.875	1.000
3.17	1/8″	0.125	1232.0	616.0	410.7	308.0	246.4	205.3	176.0	154.0
6.35	1/4″	0.250	616.0	308.0	205.3	154.0	123.2	102.7	88.0	77.0
9.52	3/8″	0.375	410.7	205.3	136.9	102.7	82.1	68.4	58.7	51.3
12.70	1/2″	0.500	308.0	154.0	102.7	77.0	61.6	51.3	44.0	38.5
15.87	5/8″	0.625	246.4	123.2	82.1	61.6	49.3	41.1	35.2	30.8
19.05	3/4″	0.750	205.3	102.7	68.4	51.3	41.1	34.2	29.3	25.7
22.22	7/8″	0.875	176.0	88.0	58.7	44.0	35.2	29.3	25.1	22.0
25.40	1″	1.000	154.0	77.0	51.3	38.5	30.8	25.7	22.0	19.3
28.57	1-1/8″	1.125	136.9	68.4	45.6	34.2	27.4	22.8	19.6	17.1
31.75	1-1/4″	1.250	123.2	61.6	41.1	30.8	24.6	20.5	17.6	15.4
34.92	1-3/8″	1.375	112.0	56.0	37.3	28.0	22.4	18.7	16.0	14.0
38.10	1-1/2″	1.500	102.7	51.3	34.2	25.7	20.5	17.1	14.7	12.8
41.27	1-5/8″	1.625	94.8	47.4	31.6	23.7	19.0	15.8	13.5	11.8
44.45	1-3/4″	1.750	88.0	44.0	29.3	22.0	17.6	14.7	12.6	11.0
47.62	1-7/8″	1.875	82.1	41.1	27.4	20.5	16.4	13.7	11.7	10.3
50.80	2″	2.000	77.0	38.5	25.7	19.3	15.4	12.8	11.0	9.6
76.20	3″	3.000	51.3	25.7	17.1	12.8	10.3	8.6	7.3	6.4
101.60	4″	4.000	38.5	19.3	12.8	9.6	7.7	6.4	5.5	4.8
127.00	5″	5.000	30.8	15.4	10.3	7.7	6.2	5.1	4.4	3.9
152.40	6″	6.000	25.7	12.8	8.6	6.4	5.1	4.3	3.7	3.2
177.80	7″	7.000	22.0	11.0	7.3	5.5	4.4	3.7	3.1	2.8
203.20	8″	8.000	19.3	9.6	6.4	4.8	3.9	3.2	2.8	2.4
228.60	9″	9.000	17.1	8.6	5.7	4.3	3.4	2.9	2.4	2.1
254.00	10″	10.000	15.4	7.7	5.1	3.9	3.1	2.6	2.2	1.9
279.40	11″	11.000	14.0	7.0	4.7	3.5	2.8	2.3	2.0	1.8
304.80	12″	12.000	12.8	6.4	4.3	3.2	2.6	2.1	1.8	1.6
330.20	13″	13.000	11.8	5.9	3.9	3.0	2.4	2.0	1.7	1.5
				LINEAL FEET PER US GALLON (3.8L)						

Note: 231 cu. in. per US gallon (3.8L)
61 cu. in. per quart (1L)

GLOSSARY of TERMS

ABS – Abbreviation for Acrylonitrile-Butadiene-Styrene pipe. Plastic pipe installed usually for drain, waste, vent and sewage.

Annular Space – Is the distance between the penetrating item and the periphery of the opening or the distance between multiple penetrations.

ANSI – Abbreviation for American National Standards Institute.

ASTM – Abbreviation for American Society for Testing and Materials.

ASTM E-814 – "Standard Method of Fire Tests of Though Penetration Firestops".

ASTM E-84 – "Standard Method for Surface Burning Characteristics pf Building Materials".

AWG – Abbreviation for American Wire Gauge – Used in combination with a number to identify a particular size wire.

Backer Rod – A round polyurethane or polyethylene foam material installed to support and provides correct depth of caulk or sealant material.

Calcination / Calcined – To heat to a high temperature but without fusing in order to drive off volatile matter or to affect changes (as oxidation).

Ceramic Fiber – High temperature man made fiber (45% alumina, 53% silica) used as insulating material where high service temperatures are required. Design service use 2300ºF (1260ºC) melting 3200ºF (1760ºC) available in 4, 6 and 8 pcf density batts/blankets. Some times used instead of mineral wool for 3 and 4-hour systems.

Closed System – Usually refers to a piping system for water distribution when the pipe is full, under pressure and closed at pipe termination. In some jurisdictions electrical conduit is considered closed.

Collars (Pipe Collars) – A one-piece prefabricated device consisting of intumescent strips and a restricting metal collar. Used on plastic pipes to direct the intumescent expansion.

CMU – Abbreviation for Concrete Masonry Unit (i.e. a hollow concrete block).

Concentric – Centered, the penetration will be positioned in the center of the opening.

Control Joint – A device or design feature that provides a continuous transition in linear openings within a fire-resistive structure and that does not exceed a maximum joint width of 5/8" (16mm). A control joint system consists of the device or designed construction feature, but does not include the fire resistive structure in which it is installed.**

CPVC Pipe – Abbreviation for Chlorinated Polyvinyl Chloride Pipe, a high performance plastic pipe used for hot and cold-water distribution. CPVC pipe is commonly used for sprinkler pipe.

Curtain Wall – A rated or non-rated, non-load bearing exterior wall assembly secured to and supported by the structural members of the building.

DWV – Abbreviation for Drain, Waste and Vent pipe. Also referred to as an open system. The pipe is empty, not pressurized.

GLOSSARY of TERMS

Eccentric – Offset or off center, the penetration will not be centered in the opening.

Elastomeric material – Rubbery type of material that when stretched directionally will elongate. When the pressure is released will go back to its original shape, size and not lose its properties or characteristics (like an elastic band).

EMT – Abbreviation for Electrical Metal Tubing; conduit. Thin wall galvanized steel pipe, containing electric cables and wires.

Endothermic – Pertaining to or produced from the absorption of heat. A change that takes place with absorption of heat and requires high temperature for initiation and maintenance.

Exposed Side – The exposed surface of an assembly refers to the surface facing the fire during a test.

F Rating (in the Untied States) or "FH" Rating (in Canada) – The time in hours that a firestop system will prevent the passage of flames through an opening and not permit the projection of water stream through a fire rated assembly as determined by standard test methods ASTM E-814, UL 1479 or CAN/ULC S115.

F Rating (in Canada) – The time in hours that a firestop system will prevent the passage of flames through an opening in a fire rated assembly as determined by standard test methods CAN/ULC S115.

Fire-Resistive Joint System – Is an assemblage of specific material or products that are designed, tested and fire-resistive in accordance with UL 2079 to resist, for a prescribed period of time, the passage of fire through foints made in or between fire resistance-rated assemblies.

Firestop System – A specific construction consists of any materials or device intended to close off an opening or penetration during a fire and/or materials that fill an opening in a wall or floor assembly where penetration is by cables, cables trays, conduits, ducts, pipes, and any poke through termination device.

Ga – Abbreviation for Gauge.

Galv – Abbreviation for Galvanized.

Intumescent – A material that swells or expands when exposed to direct flame or high heat (300ºF, 150ºC). Produced for firestopping materials in several forms; caulks, pipe collars, wrap strips, sticks and pads. Most common usage is to close gaps and voids when plastic pipe has melted.

Joint – The linear opening between adjacent fire resistive assemblies. A joint is a division of a building that allows independent movement of the building, in any plane, which may be caused by thermal, seismic, wind loading or any other loading.*

Joint System – A device or designed construction feature that provides a continuous transition in linear openings between adjacent fire resistive structures. A joint system consists of the device or designed construction feature, but does not include the fire resistive structure in which it is installed.**

Fireblocking – Building material installed to resist the free passage of flame and gases to other areas of the building through small-concealed spaces.*

Fire Separation Wall – A fire-resistive rated assembly of materials having protected openings, which is designed to restrict the spread of fire.

GWB – Abbreviation for Gypsum Wall Board; Type X gypsum wallboard manufactured to provide specific fire-resistive characteristics. (ex. GWB type X, 5/8" thick has a 30-minute fire resistive rating).

GLOSSARY of TERMS

Hose Stream Test – Part of the acceptance criteria of ASTM E119, ASTM E814, CAN4 S115, UL 2079. After the test assembly has passed the furnace burn, a steady stream of water is directed onto the fire exposed side of the assembly through a 2 ½" hose. Water is not permitted to pass through the firestop fill material to the unexposed side. The integrity of the unexposed side must remain intact.

Linear Opening – A discontinuity between or within fire resistive structures.**

L Rating – An optional test performed to determine the amount of air leakage through a firestop system (in cubic feet per minute per square foot of opening). Tested in conjunction with UL 1479, ULC S115-M95, ASTM E 814 or UL 2079.

Listed System Design – An informational listing by an Accredited Testing Agency developed from Passive Fire Protection Partners Reports depicting the correct use and installation of firestop materials. These published listings contain drawings depicting geometry, minimum/maximum dimensions for all the individual components tested including penetration item types and size, annular space, insulating materials used, substrate types and thickness, sealant types and thickness, etc.

Maximum Joint Width – The greatest width to which the joint system is designed to extend taking into consideration all axes of movement.**

Membrane Penetration – An opening made through one side (wall, floor or ceiling membrane) of an assembly.*

Mineral Wool – A fire-resistant fibrous material used as a insulation and filler material in a firestop system, capable of withstanding temperatures of 1832°F (1000°C). Supplied in loose and blanket board form. The most popular used for firestopping is 4 and 6-lb batts, 24" x 48" (8-lb is fairly rigid and is usually used in larger construction joints).

Minimum Joint Width – The narrowest width the joint system is designed to accommodate.**

Movement Capability – The range of movement that a joint system is designed to accommodate without diminishing its fire resistive performance.**

Non-Sag Caulk – Any compound that does not flow or sag out after application usually installed in a vertical joint or wall penetration.

Open System – A series of designed pipes through which waste materials and liquids are vented to a central system. In some jurisdictions, EMT is considered an open system. Air duct systems have also been seen by some as an open penetration.

Party Wall – A wall jointly owned and jointly used by two parties under easement agreement or by right of law, and erected at or upon a line separating 2 parcels of landeach of which is, or is capable of being, a separate real estate entity.

pcf – Abbreviation for pounds per cubic foot.

Penetration – An opening created in a membrane or assembly to accommodate penetrating items for electrical, mechanical, plumbing, environmental, and communication systems.*

Penetration Firestop System – An assemblage of specific materials or products that are designed, tested and fire-resistive in accordance with UBC 7-5 to resist, for a prescribed period of time, the passage of fire through penetrations.*

Perimeter Fire Containment Systems – A specific construction consisting of a floor with an hourly fire endurance rating, an exterior curtain wall with no hourly fire endurance rating and the fill material installed between the floor and the curtain wall to prevent the vertical spread of fire in the building.

GLOSSARY of TERMS

PEX Pipe – Abbreviation for Cross-Link Polyethylene pipes, typically for domestic water distribution and hydronic heating. High temperature and pressure properties.

Point Contact – Penetrating item is touching the side of the substrate or another penetrating item.

Putty Pad – A rectangular or square pad installed on the outside of an electrical outlet box. Material may be intumescent or non-intumescent.

PVC Pipe – Abbreviation for Polyvinyl Chloride pipe, a plastic pipe usually used for water waste distribution. (vented, open system).

Rating – The time period the penetration firestop system limits the passage of fire through the penetration when tested in accordance with ASTM-E814 (UBC 7-5).*

Rated Wall/Floor – Any wall or floor that has a fire-resistive rating tested to ASTM E119 (UBC 7-1).

Safing Material – Insulation material installed in joints and annular spaces to prevent the fire from getting to the unexposed side. Installed before the firestop sealant is applied (usually mineral wool).

Safing Slot – Opening/gap between the exterior wall of a building and the edge of the floor slab.

Splice – The result of a factory or field method of joining or connecting two or more lengths of a fire-resistive joint system into a continuous entity.*

Structure – The fire resistive floor and/or wall segments between which the joint system is installed.**

T Rating – The time period that the penetration firestop system including the penetrating item, limits the maximum temperature rise to 325ºF (163ºC) above its initial temperature through the penetration on the non-fire side, when tested in accordance with ASTME-814 or UBC 7-5.*

Third Party testing Agency – An accredited testing agency approved to perform Fire Endurance Testing.

Through-Penetration Firestop System – An assemblage of specific materials or products that are designed, tested and fire-resistance rated to resist for a prescribed period of time the spread of fire through penetrations. The F and T rating criteria for penetration firestop systems shall be in accordance with ASTM E 814 (ULC S115-M05).

Top-of-Wall – The gap/joint above the GWB or concrete wall and below the ceiling, metal deck of floor.

Slab Edge – The edge/end of the floor slab.

07840 – "Firestopping and Smoke Protection" section of the architectural specifications guide.

07270 – Firestop Section of the Architecture Specifications Guide, recently changed to 07840.

UL – Abbreviation for Underwriters Laboratories, Inc. Non-profit, independent third party testing Laboratory located in Northbrook, Illinois.

Unexposed Side – The unexposed surface of an assembly refers to the surface away from the fire during a test.

I.T.S. (Warnock Hersey) – Independent third party testing laboratory located in Coquitlam, BC and San Antonio, TX for firestop testing. Proper company name is Intertek Testing Services (ITS).

GLOSSARY of TERMS

Wrap Strip – A flexible intumescent material approximately 2" wide, 1/16" thick installed around the circumference of a plastic pipe, between the pipe and the substrate.

UL Classification – An identification method used by UL to classify and rate manufacturer's that require Code or Standard Compliance. These products are classified and are subject to the UL "Follow-Up Service." Firestop materials are UL Classified, they are not "approved" nor "listed" products tested to be used in specific applications.

* Definition from 1997 Uniform Building Code
** Definition from UL - Test for Fire Resistance of Building Joint Systems UL 2079

GLOSSARY of TERMS

Underwriters Laboratories Through-Penetrations

System #	Page #
C-AJ-0103	3
C-AJ-0108	4
C-AJ-1494	5
C-AJ-1495	6
C-AJ-1499	7
C-AJ-1500	8
C-AJ-1596	9
C-AJ-2465	10
C-AJ-2470	11
C-AJ-2571	12
C-AJ-2619	14
C-AJ-2620	16
C-AJ-3230	17
C-AJ-3233	18
C-AJ-3302	19
C-AJ-5261	21
C-AJ-5262	22
C-AJ-5266	23
C-AJ-5267	24
C-AJ-5326	25
C-AJ-8142	26
C-AJ-8145	28

System #	Page #
F-A-1058	30
F-A-1060	31
F-A-2121	32
F-A-2126	33
F-A-7013	34
F-A-7014	35
F-A-7015	36
F-A-7016	37
F-C-1119	38
F-C-1122	39
F-C-2283	40
F-C-2287	41
F-C-3079	42

System #	Page #
F-C-3080	43
W-J-1153	44
W-J-1157	45
W-J-2149	46
W-J-2153	47
W-J-3121	48
W-J-3123	49
W-J-4046	50
W-J-4047	52
W-J-7064	54
W-J-7065	55
W-J-7066	56
W-J-7067	57
W-L-1338	58
W-L-1342	59
W-L-1449	60
W-L-1475	62
W-L-2384	63
W-L-2387	64
W-L-2475	65
W-L-2540	67
W-L-3245	68
W-L-3247	69
W-L-3348	70
W-L-4046	72
W-L-4047	74
W-L-5217	76
W-L-5218	78
W-L-5219	79
W-L-7107	81
W-L-7108	82
W-L-7109	83
W-L-7110	84

Underwriters Laboratories Joint Systems

System #	Page #
BW-S-0009	87
BW-S-0010	88
CW-D-1006	89
CW-S-1011	93
CW-S-2054	95
FF-D-0047	98
FF-D-0048	99
FF-D-1059	100
FW-D-0038	101
FW-D-0039	102

System #	Page #
FW-D-1055	103
HW-D-0353	104
HW-D-0354	106
HW-D-0355	107
HW-D-0356	108
HW-D-0357	110
HW-D-0358	113
HW-D-0359	116
HW-D-0368	118
HW-D-0369	120

System #	Page #
HW-D-0370	121
HW-D-0404	123
HW-D-0531	125
HW-D-0532	127
HW-D-0547	129
HW-D-0566	132
HW-D-0567	134
HW-D-0568	136
HW-D-0692	139
HW-D-0694	141
HW-D-1050	143
WW-D-0078	144
WW-S-0054	145

Intertek / Omega Point Laboratories Joint Systems

System #	Page #
JWA/JS 120-01	223
JWA/JS 120-02	225
JWA/JS 120-03	228
JWA/JS 120-04	230
JWA/JS 120-05	233
JWA/JS 120-06	236
JWA/JS 120-07	238

System #	Page #
JWA/JS 120-08	241
JWA/JS 120-09	244
JWA/JS 120-10	247
JWA/JS 120-11	250
JWA/JS 120-12	253
JWA/JS 120-13	256
JWA/JS 120-14	259

System #	Page #
JWA/JS 120-15	262
JWA/JS 120-16	264
JWA/JS 120-17	266
JWA/JS 120-18	269
JWA/JS 120-19	272
JWA/JS 120-20	275
JWA/JS 120-21	278

ITS - Warnock Hersey System Designs

System #	Page #
JWA/PH 60-01	149
JWA/PH 60-02	151
JWA/PH 60-03	152
JWA/PH 60-04	153
JWA/PH 60-05	155
JWA/PH 60-06	156
JWA/PH 120-01	158
JWA/PH 120-02	159
JWA/PH 120-03	160
JWA/PH 120-04	162
JWA/PH 120-05	163
JWA/PH 120-06	164
JWA/PH 120-07	165
JWA/PH 120-08	166
JWA/PH 120-09	168
JWA/PH 180-01	169

System #	Page #
JWA/PHV 60-01	170
JWA/PHV 120-01	171
JWA/PHV 120-02	172
JWA/PHV 120-03	173
JWA/PHV 120-04	174
JWA/PHV 120-05	175
JWA/PHV 120-06	176
JWA/PHV 120-07	179
JWA/PHV 120-08	181
JWA/PHV 120-09	183
JWA/PHV 120-10	185
JWA/PHV 120-11	187
JWA/PHV 120-12	188
JWA/PHV 120-13	190
JWA/PHV 120-14	191
JWA/PHV 120-15	192
JWA/PHV 120-16	194
JWA/PHV 120-17	196
JWA/PHV 120-18	197
JWA/PHV 120-19	198

System #	Page #
JWA/PHV 120-20	199
JWA/PV 60-01	201
JWA/PV 60-02	202
JWA/PV 60-03	203
JWA/PV 60-04	204
JWA/PV 60-05	206
JWA/PV 120-01	208
JWA/PV 120-02	209
JWA/PV 120-03	210
JWA/PV 120-04	211
JWA/PV 120-05	212
JWA/PV 120-06	214
JWA/PV 120-07	215
JWA/PV 120-08	216
JWA/PV 240-01	218
JWA/PV 240-02	219

GRABBER DISTRIBUTION CENTERS

GRABBER California
205 Mason Circle
Concord, CALIFORNIA 94520
925-687-6606

GRABBER Los Angeles
8319 Allport Avenue
Santa Fe Springs, CALIFORNIA 90670
562-696-5122

GRABBER San Diego
9466 Chesapeake Drive, Suite 702
San Diego, CALIFORNIA 92123
858-292-6022

GRABBER San Francisco
3000 3rd Street
San Francisco, CALIFORNIA 94107
415-550-SCREW (7273)

Grabber/Scorpion Fasteners
120 Newberry Road
East Windsor, CONNECTICUT 06088
860-623-3600

GRABBER Southeast
1857 SW 3rd St.
Pompano Beach, FLORIDA 33069
954-971-4730

GRABBER Ft. Myers
12570 Metro Pkwy, Unit 1
Ft. Myers, FLORIDA 33966-8356
239-278-1888

GRABBER Jacksonville
5913-7 Saint Augustine Road
Jacksonville, FLORIDA 32207
904-739-2760

GRABBER Latin America
1830 SW 2nd St.
Pompano Beach, FLORIDA 33069
954-971-4730

GRABBER Miami
5717 NW 158th St
Hialea, FLORIDA 33014
305-820-0975

GRABBER Orlando
3714 Silver Star Road
Orlando, FLORIDA 32808
407-297-7278

GRABBER Tampa
5835 Barry Road
Tampa, FLORIDA 33634
813-249-2281

GRABBER Atlanta
2605 North Berkeley Lake Road, Suite 500
Duluth, GEORGIA 30096
770-813-1332

GRABBER Hawaii
2970 Mokumoa Street
Honolulu, HAWAII 96818
808-836-1161

GRABBER Washington D.C
850 B Hampton Park Blvd
Capitol Heights, MARYLAND 20743-4917
301-808-5100

GRABBER Frederick
5431 Yukon Ct., Suite G
Frederick, MARYLAND 21703-7300
301-371-0701

GRABBER Missouri
1805 Liberty St.
Kansas City, MISSOURI 64102
816-931-8816

GRABBER Northeast
1125 Thomas Busch Memorial Hwy
Pennsauken, NEW JERSEY 08110
856-662-2525

GRABBER Ohio
4325 Muhlhauser Rd., Suite 8
Fairfield, OHIO 45014
513-874-9027

Grabber Midwest
370 W. Dussel Dr., Suite 5
Maumee, OHIO 43537-1604
419-794-8212

GRABBER Northwest
13011 SE Jennifer St., Ste# 201
Clackamas, OREGON 97015
503-654-5234

GRABBER Memphis
3623 Goodlet Rd., #4
Memphis, TENNESSEE 38118
901-794-1894

GRABBER Texas
10990 Petal Street, Ste 400
Dallas, TEXAS 75238-2487
972-470-9044

GRABBER South Texas
2121 Brittmoore Rd, #1400
Houston, TEXAS 77043-2200
713-545-3918

GRABBER Utah
4690 South 500 West
Murray, UTAH 84123
801-266-4151

GRABBER Virginia
14801 Willard Rd,Suite 700
Chantilly, VIRGINIA 20151
703-631-8770

GRABBER CONSTRUCTION PRODUCTS
www.grabberman.com

GRABBER Corporate Offices
5255 W. 11000 N. STE 100
Highland, Utah 84003-8955
801-492-3800

GRABBER DIVISIONS

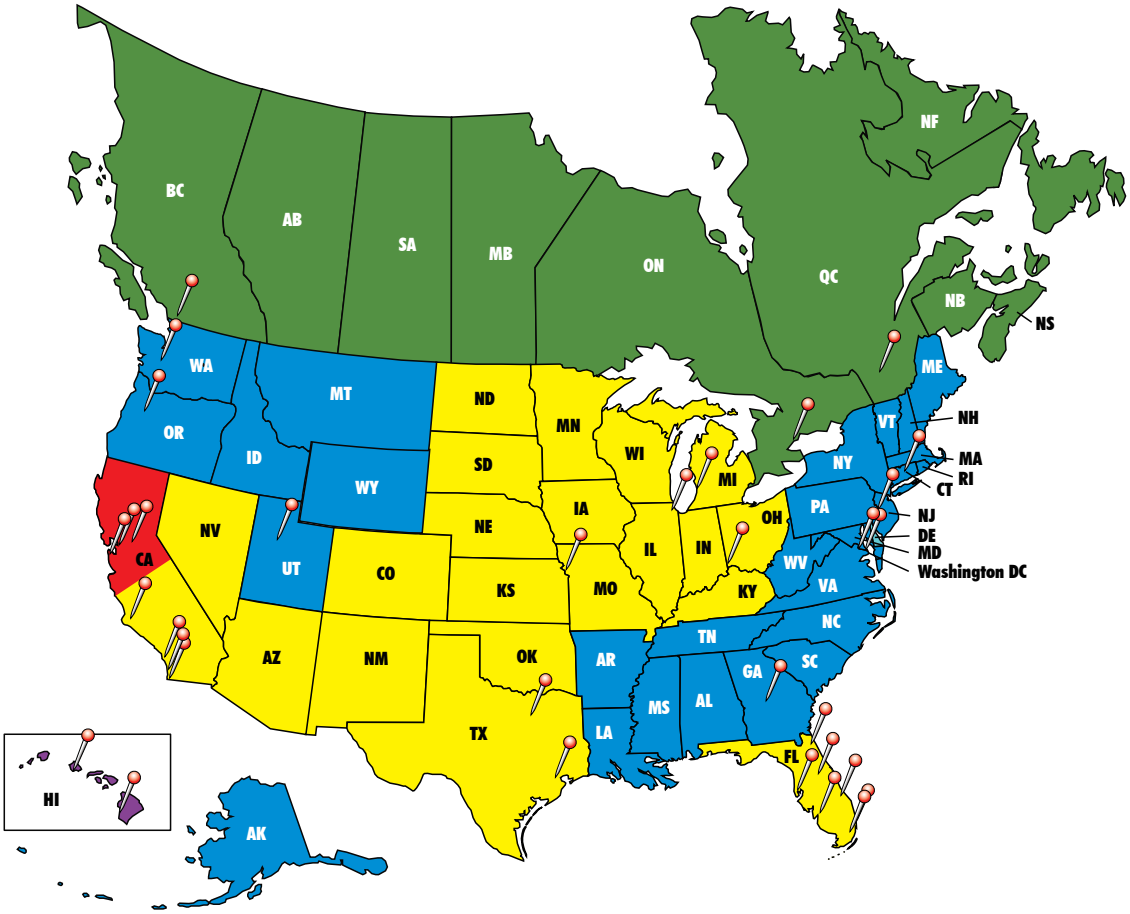

Grabber Hawaii
Kawika Herron
Division Sales
Phone: 808.836.1161
Fax: 808.833.4291

US South Division
Mike Hamilton
Division Sales Manager
Trace Boswell
Division Operations Manager
Phone: 800.925.0320
Fax: 954.977.3842

US North Division
Bill Reese
Division Sales Manager
Steve Fletcher
Division Operations Manager
Phone: 800.241.3161
Fax: 770.813.8184

Canadian Division
Randy Grill
Division Sales Manager
& Operations Manager
Phone: 604.856.1444
Fax: 604.856.2444

Grabber California
Todd Balestrieri
Division Sales Manager
& Operations Manager
Phone: 800.606.6006
Fax: 925.687.6261

Grabber has you covered with more than just great fastening products. . .

To put it simply, Grabber can help you build a better product while simultaneously making you more money. Through constant innovation, Grabber continues to simplify the way you work by providing the best, most technologically advanced products available today.

Drywall Screws
Metal Framing Screws
Concrete Anchors
Pneumatic Nails

Fasten it

Grabber has a full line of fasteners for just about any application. From drywall screws to heavy gauge framing screws Grabber has what you need. Grabber invented the drywall screw and changed an entire industry. For the past 40 years Grabber has been the name you can trust for professional grade fasteners.

SuperDrive
Screw Guns
Chop Saws
Lasers

Drive it

Grabber's SuperDrive tool is designed to make driving screws faster and more accurate. Along with SuperDrive, Grabber offers many other tools that make your work easier including chop saws, routers, lasers and more.

Subfloor Adhesives
Drywall Adhesives
Acoustical Sealants
Fire Stopping Caulks

Caulk it

Grabber offers a complete line of caulks including sound control sealants, subfloor adhesives, drywall adhesives, insulation foam and more. Grabber also offers EFC and IFC fire stopping caulks and sealants.

NO-COAT® Stick Products
NO-COAT® ULTRAFLEX
HYDROTRIM®
Drywall Tape
Finishing Tools

Finish it

Grabber has everything you need for finishing your drywall projects. From fiberglass mesh tape and spark perforated drywall tape to the innovative No-Coat® structural drywall system, Grabber has what you need to do the job right.

Quality every step of the way. . . the reason the pros choose Grabber

Grabber sweats the small stuff, and that makes all the difference

The professional's first choice for over 40 years, Grabber premium quality screws are built for performance. Sharper threads mean a better driving experience so Grabber changes thread dies more frequently. Tight recesses mean screws are less likely to cam-out and bit tips will last longer so Grabber changes recess dies more frequently. Consistent heat treating means screw heads will be less likely to pop off, so Grabber heat treats fewer screws at a time ensuring more even heat treatment. These are small things most people don't notice, but they are also small things that make the difference between average fasteners and professional grade fasteners.

Grabber is an international distributor of premium fasteners and fastening systems for wood, metal, and drywall applications in the commercial and residential construction markets. Grabber is home to the Deckmaster® Hidden Fastening System, the patented LOX® Drive System, and the SuperDrive Auto-Feed Fastening System. Grabber also distributes a wide range of proprietary tools and accessories, various equipment, and building materials to the construction industry.

GRABBER®
CONSTRUCTION PRODUCTS
www.grabberman.com

Visit www.grabberman.com or call 800-477-8876 to find a dealer near you.

Grabber screws and drywall nails are ICC ES (International Code Council Evaluation Service) evaluated, and engineered to meet or exceed the specifications for use, as prescribed in UBC 1997, IBC 2006, IRC 2006, IBC 2009, and IRC 2009. ASTM reports, approvals, shear, pullout and other technical information is available at www.grabberman.com

Grabber screws and nails are produced in an ISO 9001 and ISO 14001 approved and certified manufacturing environments. Grabber also supports a complete line of US manufactured construction fasteners that meet "Buy American" and the "American Reinvestment and Recovery Act" requirements. GrabberGard® exterior grade coated fasteners are rated for use in ACQ, pressure and fire treated lumber.

ICC EVALUATION SERVICE · ISO 14001 SGS · ISO 9002 CERTIFIED · ASTM INTERNATIONAL Standards Worldwide